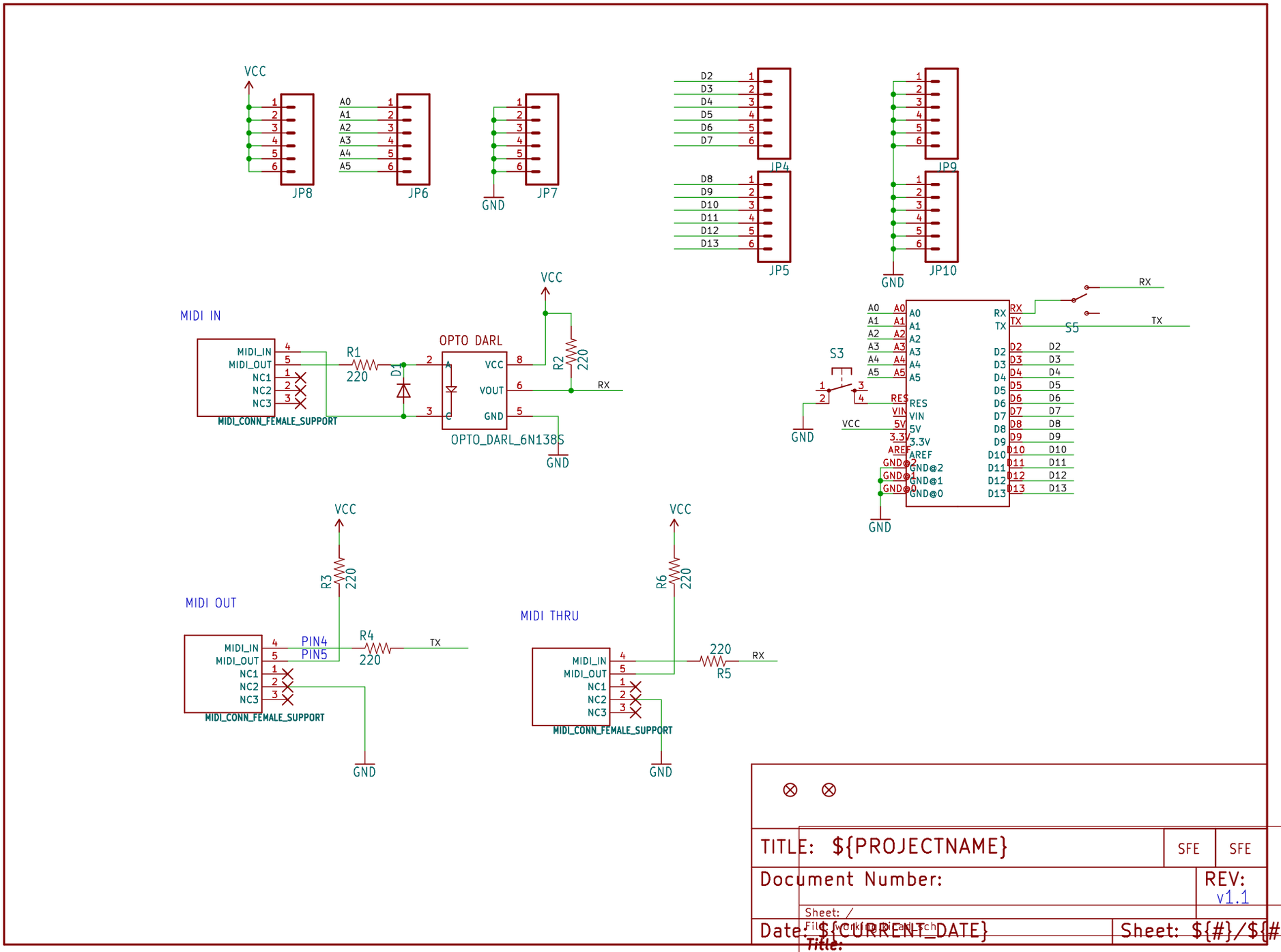
VCC
JP8
JP6
JP7
GND
JP4
JP5
JP9
JP10
MIDI IN
MIDI_IN
MIDI_OUT
NC1
NC2
NC3
MIDI_CONN_FEMALE_SUPPORT
R1
220
D1
OPTO DARL
VCC
VOUT
GND
OPTO_DARL_6N138S
R2
220
RX
S3
S5
TX
MIDI OUT
R3
220
PIN4
PIN5
R4
220
MIDI THRU
R6
220
R5
220
TITLE: ${PROJECTNAME}
SFE
SFE
Document Number:
REV:
v1.1
Sheet: /
File: working_kicad.sch
Date: ${CURRENT_DATE}
Sheet: ${#}/${##}
Title:
Size: User
Date:
Rev:
KiCad E.D.A. eeschema 7.0.6
Id: 1/1