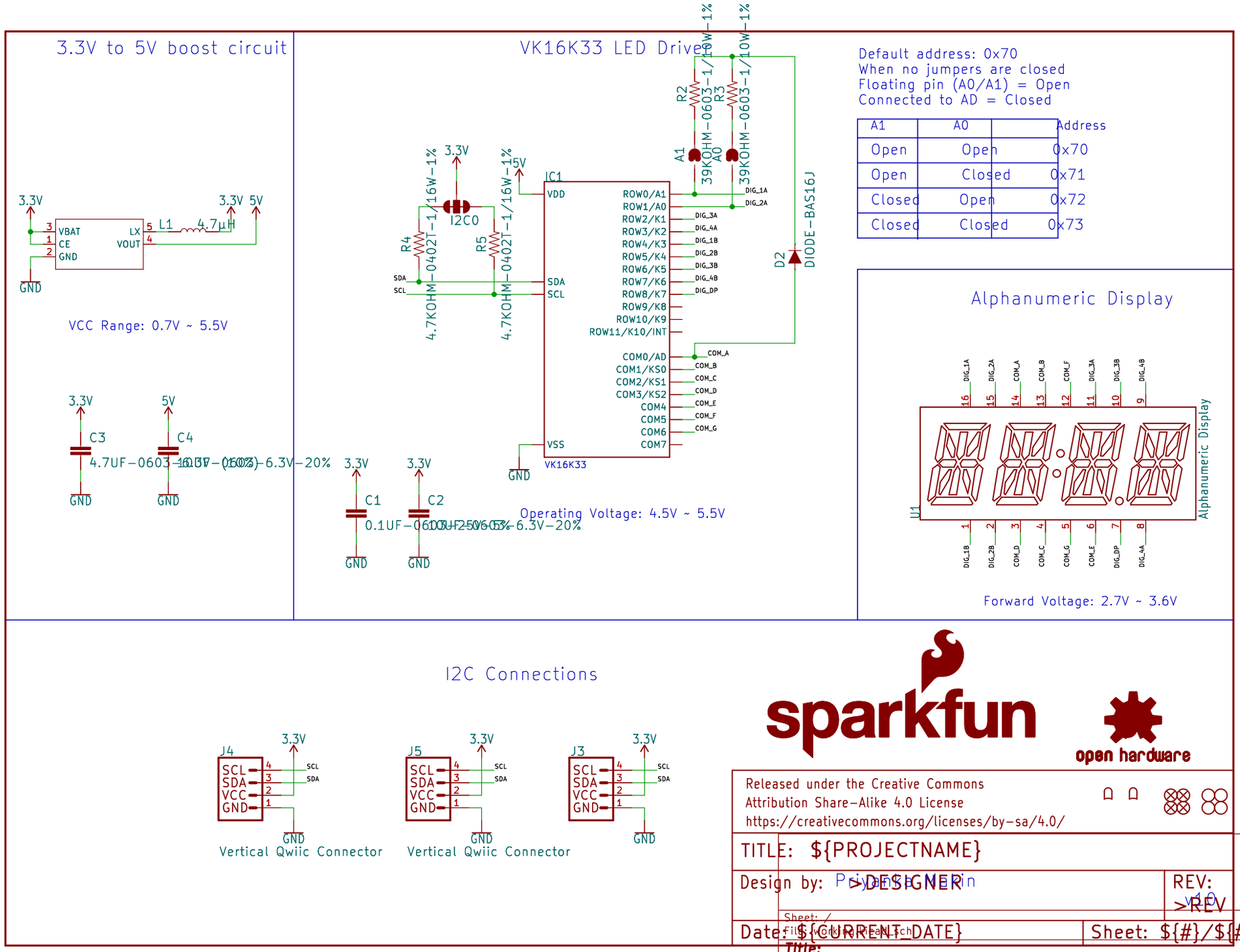
3.3V to 5V boost circuit
VBAT
CE
GND
LX
VOUT
L1
4.7µH
3.3V
5V
GND
VCC Range: 0.7V ~ 5.5V
C3
C4
4.7UF-0603-10.0V-(10%)-6.3V-20%
VK16K33 LED Driver
IC1
VDD
SDA
SCL
VSS
VK16K33
ROW0/A1
ROW1/A0
ROW2/K1
ROW3/K2
ROW4/K3
ROW5/K4
ROW6/K5
ROW7/K6
ROW8/K7
ROW9/K8
ROW10/K9
ROW11/K10/INT
COM0/AD
COM1/KS0
COM2/KS1
COM3/KS2
COM4
COM5
COM6
COM7
R2
R3
39KOHM-0603-1/10W-1%
A1
A0
R4
R5
4.7KOHM-0402T-1/16W-1%
I2C0
D2
DIODE-BAS16J
C1
C2
0.1UF-0603-10.0V-(10%)-6.3V-20%
Operating Voltage: 4.5V ~ 5.5V
Default address: 0x70
When no jumpers are closed
Floating pin (A0/A1) = Open
Connected to AD = Closed
A1 A0 Address
Open Open 0x70
Open Closed 0x71
Closed Open 0x72
Closed Closed 0x73
Alphanumeric Display
U1
Alphanumeric Display
Forward Voltage: 2.7V ~ 3.6V
I2C Connections
J4
J5
J3
SCL
SDA
VCC
GND
Vertical Qwiic Connector
Vertical Qwiic Connector
sparkfun
open hardware
Released under the Creative Commons
Attribution Share-Alike 4.0 License
https://creativecommons.org/licenses/by-sa/4.0/
TITLE: ${PROJECTNAME}
Design by: >DESIGNER
REV: >REV
Date: ${CURRENT_DATE}
Sheet: ${#}/${##}
Size: User
Date:
Rev:
KiCad E.D.A. eeschema 7.0.6
Id: 1/1