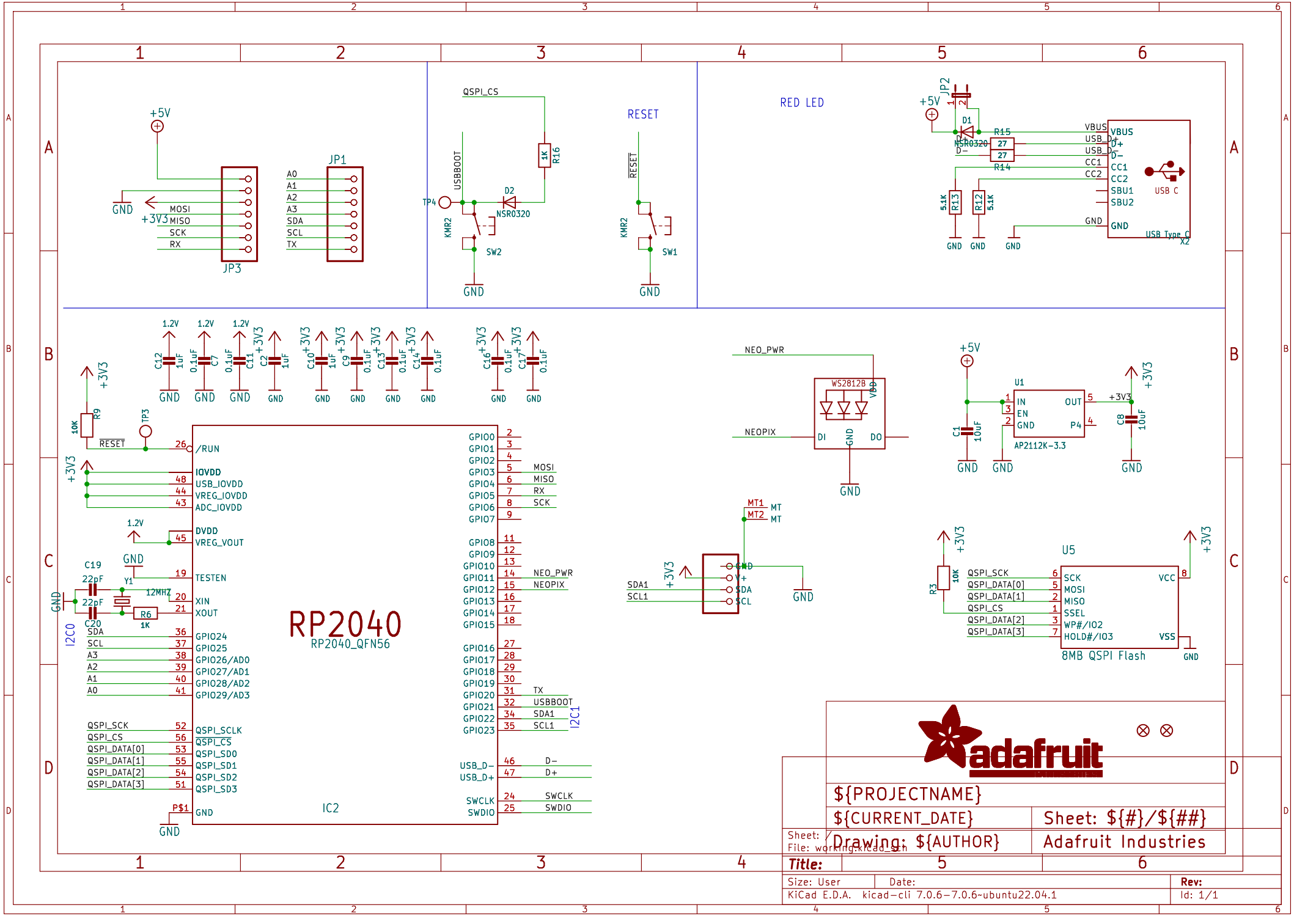

RP2040
RP2040_QFN56
IC2
JP1
JP3
RESET
RED LED
USB C
USB Type C
X2
WS2812B
U1
AP2112K-3.3
U5
8MB QSPI Flash
adafruit
${PROJECTNAME}
${CURRENT_DATE}
Sheet: ${#}/${##}
Drawing: ${AUTHOR}
Adafruit Industries
Sheet: /
File: working.kicad_sch
Title:
Size: User
Date:
Rev:
KiCad E.D.A. kicad-cli 7.0.6-7.0.6~ubuntu22.04.1
Id: 1/1