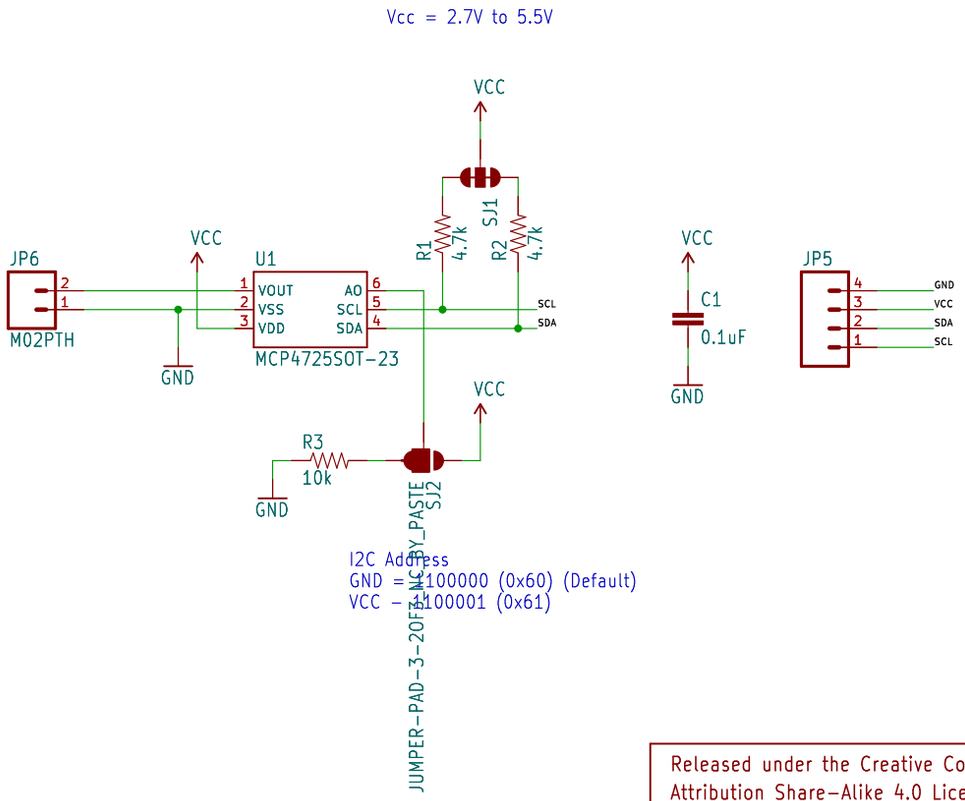


Released under the Creative Commons
Attribution Share-Alike 4.0 License
https://creativecommons.org/licenses/by-sa/4.0/

open hardware

| | |
|---|---|
| TITLE: ${PROJECTNAME} | SFE |
| Design by: Joel Bartlett >DESIGNER | REV: >VERSION |
| Date: ${CURRENT_DATE} | Sheet: ${#}/${##} |

Sheet: /
File: working_kicad.sch
Title:
Size: User Date: Rev:
KiCad E.D.A. eeschema 7.0.6 Id: 1/1