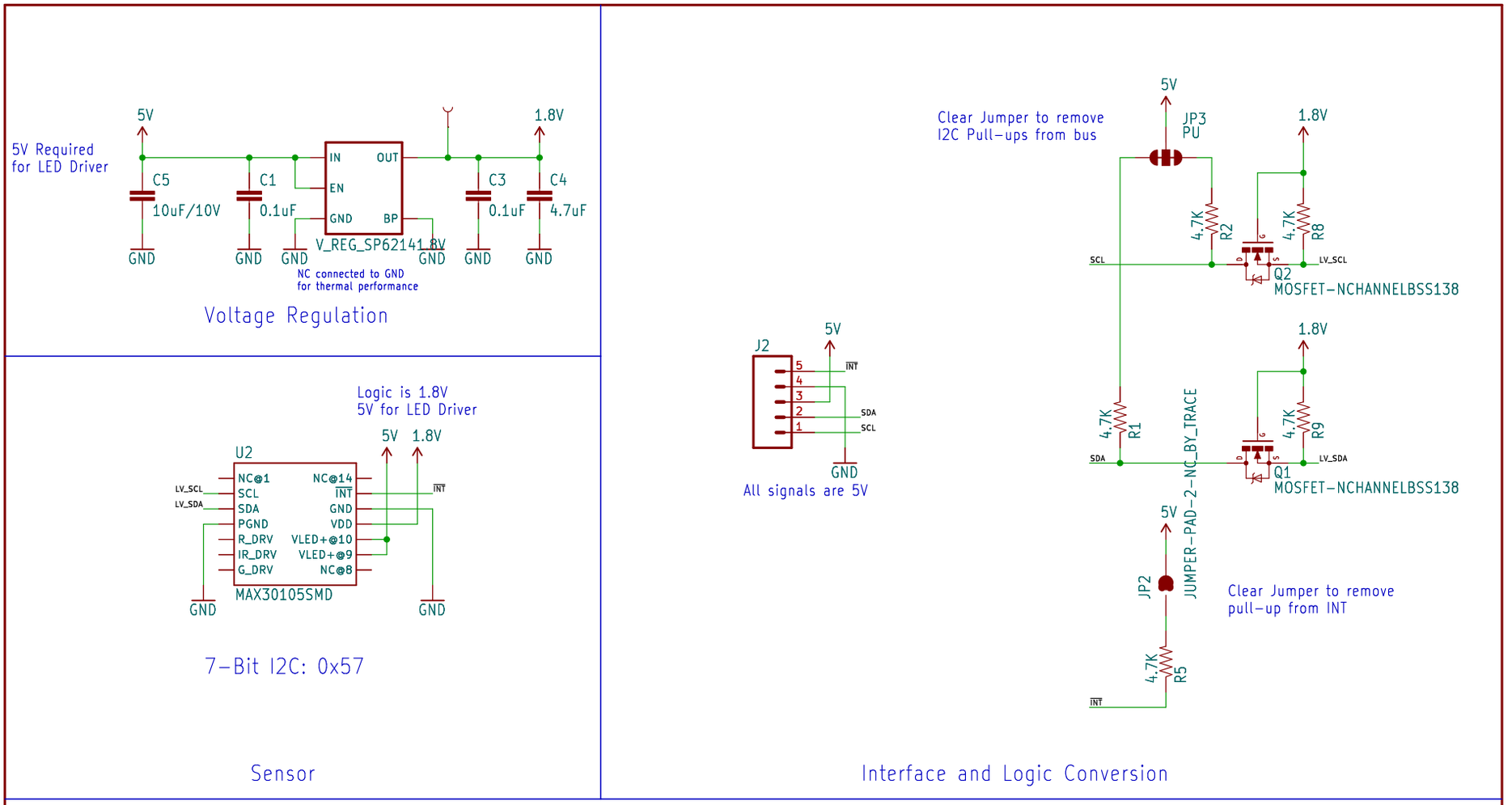

Released under the Creative Commons
Attribution Share-Alike 4.0 License
https://creativecommons.org/licenses/by-sa/4.0/

TITLE: ${PROJECTNAME}

Design by: N. Seidle

REV: v10

Sheet: /

File: working_kicad_sch

Date: ${CURRENT_DATE}

Sheet: ${#}/${##}

Title:

Size: User

Date:

Rev:

KiCad E.D.A. kicad-cli 7.0.6-7.0.6~ubuntu22.04.1

Id: 1/1