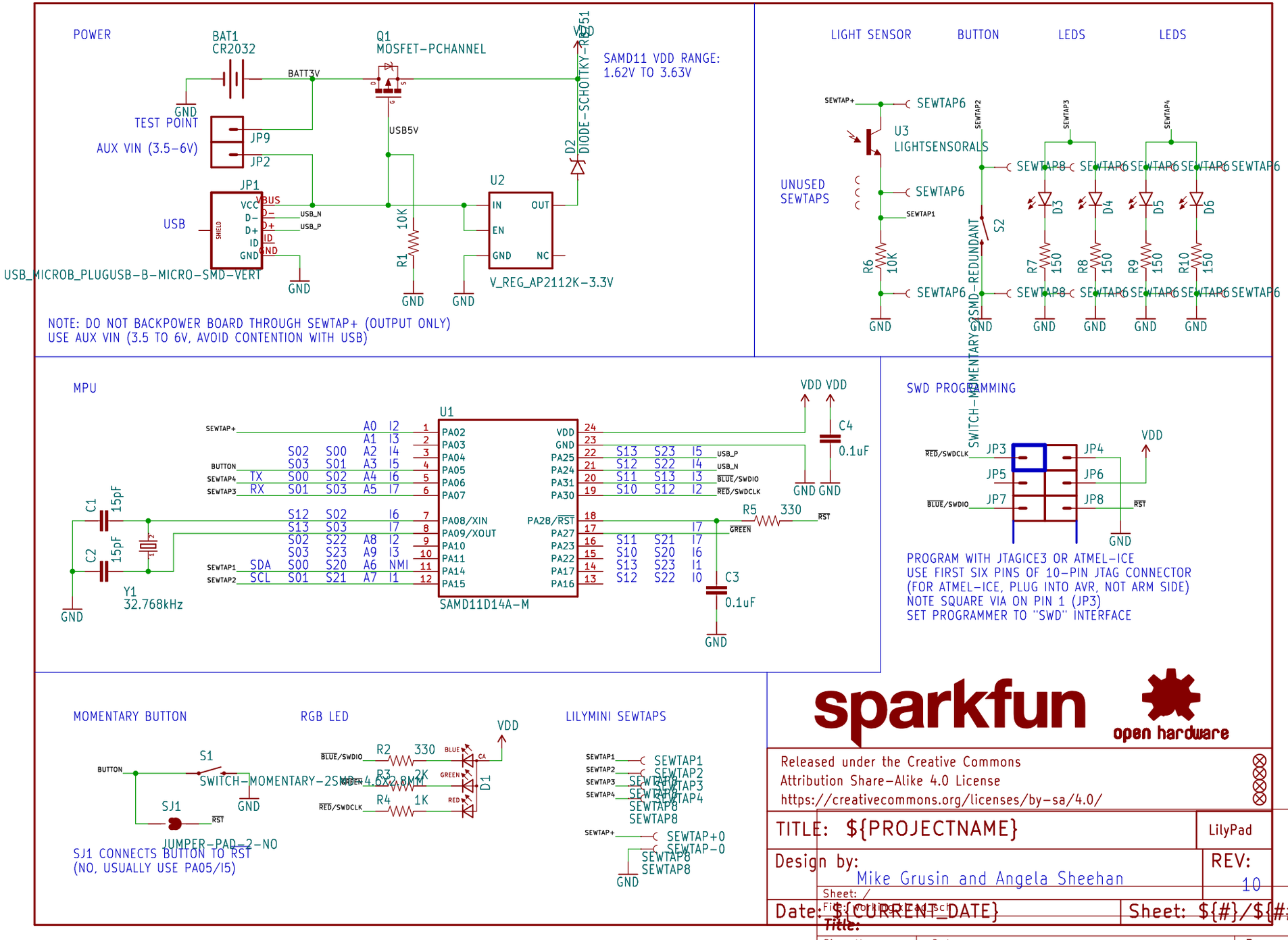

sparkfun

open hardware

Released under the Creative Commons
Attribution Share-Alike 4.0 License
https://creativecommons.org/licenses/by-sa/4.0/

TITLE: ${PROJECTNAME}	LilyPad
Design by: Mike Grusin and Angela Sheehan	REV: 10
Sheet: /	
File: working.kicad_sch	
Date: ${CURRENT_DATE}	Sheet: ${#}/${##}
Title:	
Size: User Date:	Rev:
KiCad E.D.A. kicad-cli 7.0.6-7.0.6~ubuntu22.04.1	Id: 1/1