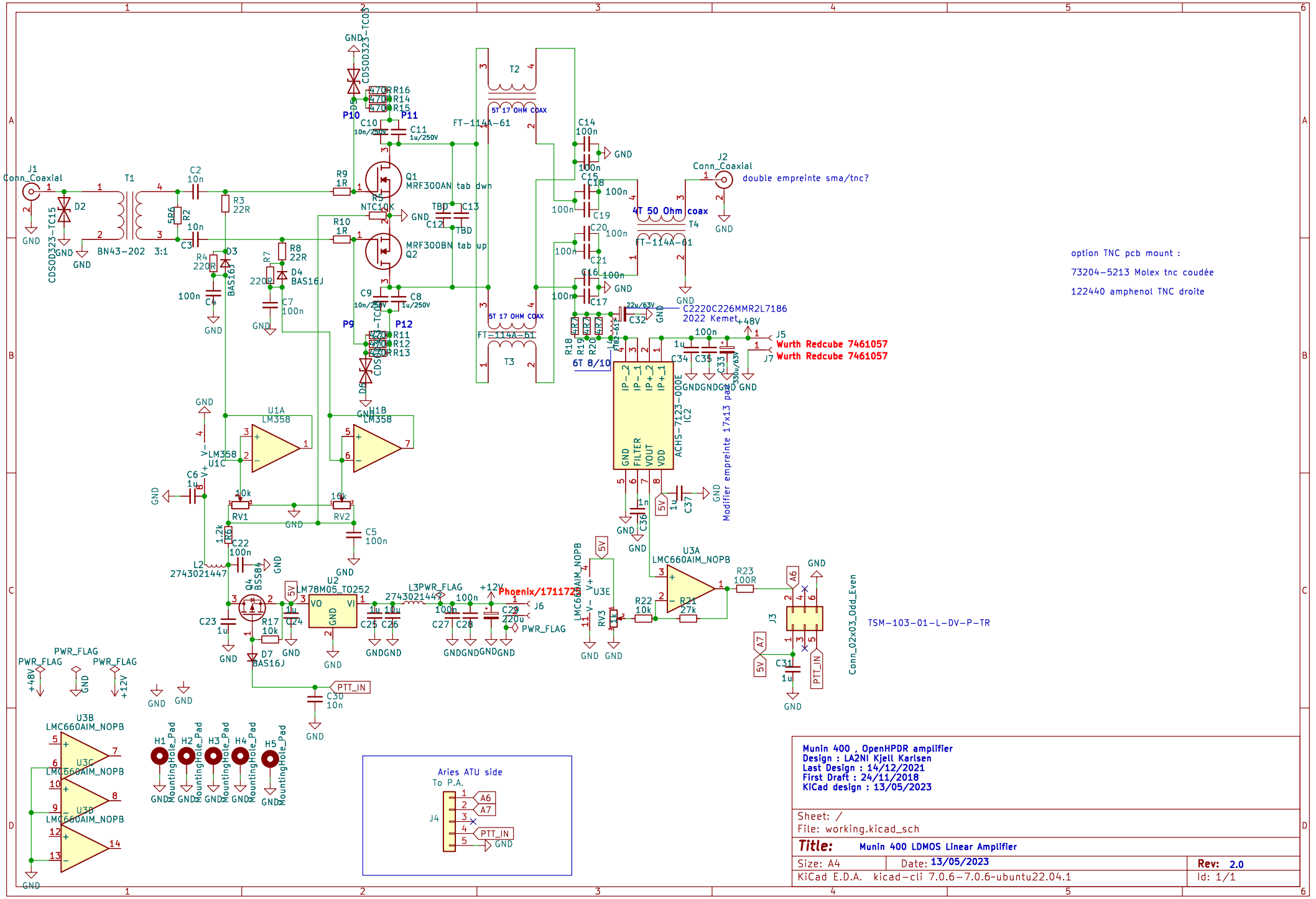

Munin 400 , OpenHPDR amplifier
Design : LA2NI Kjell Karlsen
Last Design : 14/12/2021
First Draft : 24/11/2018
KiCad design : 13/05/2023

Sheet: /
File: working.kicad_sch

Title: Munin 400 LDMOS Linear Amplifier

Size: A4	Date: 13/05/2023	Rev: 2.0
KiCad E.D.A. kicad-cli 7.0.6-7.0.6~ubuntu22.04.1		Id: 1/1