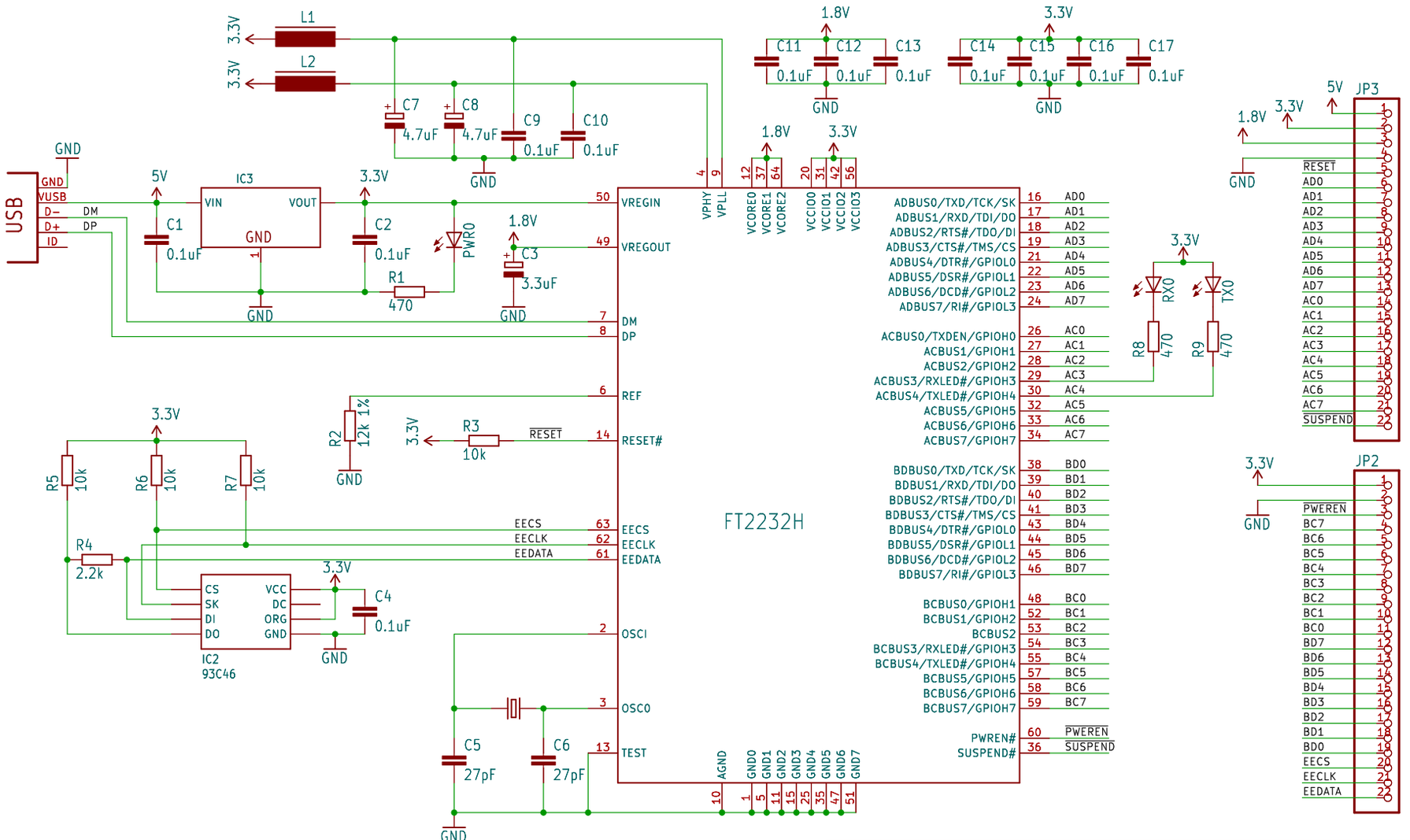

TITLE: ${PROJECTNAME}

Document Number: REV:

Sheet: /

File: /autosave/autosave-working.kicad_sch

Date: ${CURRENT_DATE} Sheet: ${#}/${##}

Title:

Size: User Date: Rev:

KiCad E.D.A. eeschema 7.0.6 Id: 1/1