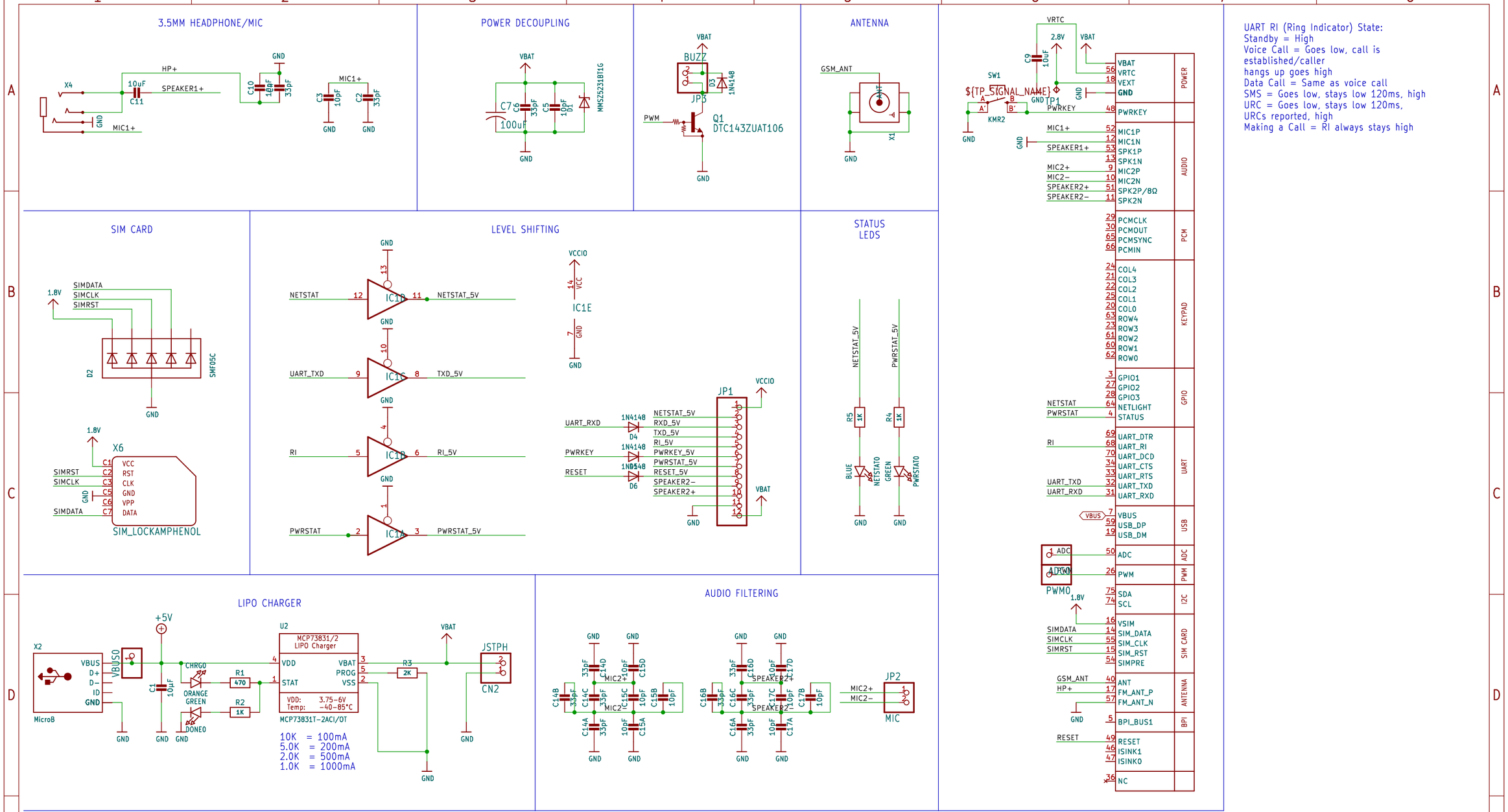

ISSUE	${COMPANY}	© 2014
DRAWN ${DRAWN}	TITLE	REV ${REV}
CHECKED ${CHECKED}	DATE ${CURRENT_DATE}	DRG № ${DRGNO}
DATE ${DATE}	FILE: ${PROJECTNAME}	PAGE: ${#}/${##}

Title:

Size: User Date: Rev:

KiCad E.D.A. eeschema 7.0.6 Id: 1/1