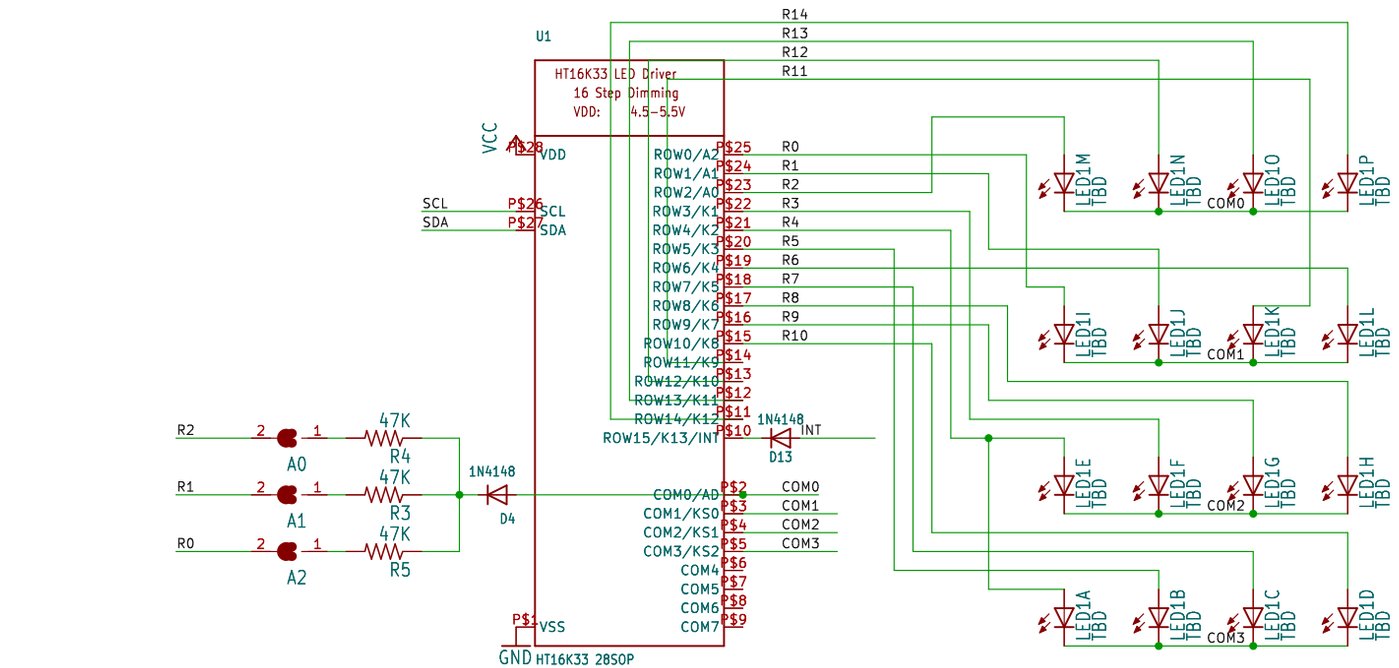

Adafruit Trellis 4x4 PCB w/3mm LED
HT16K33 LED/Keypad I2C Driver
GNU Public License v2

TITLE: ${PROJECTNAME}	
Document Number:	REV:
Sheet: /	
File: workingbicadtch	
Date: ${CURRENT_DATE}	Sheet: ${#}/${##}

Title:

Size: User	Date:	Rev:
KiCad E.D.A. eeschema 7.0.6		Id: 1/1