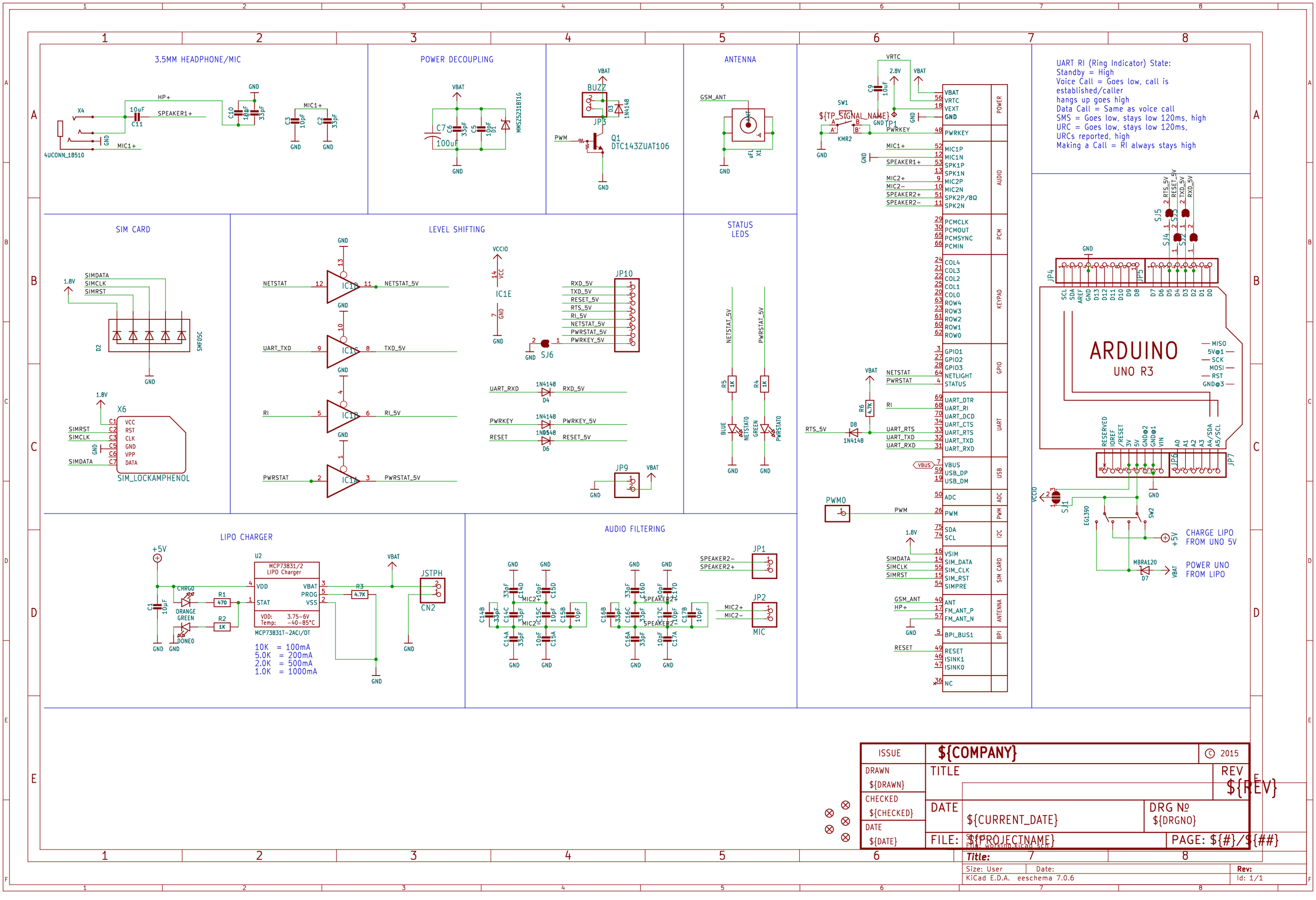
3.5MM HEADPHONE/MIC
POWER DECOUPLING
ANTENNA
SIM CARD
LEVEL SHIFTING
STATUS LEDS
LIPO CHARGER
AUDIO FILTERING
UART RI (Ring Indicator) State:
Standby = High
Voice Call = Goes low, call is established/caller hangs up goes high
Data Call = Same as voice call
SMS = Goes low, stays low 120ms, high
URC = Goes low, stays low 120ms, URCs reported, high
Making a Call = RI always stays high
ARDUINO
UNO R3
CHARGE LIPO FROM UNO 5V
POWER UNO FROM LIPO
MCP73831/2 LIPO Charger
10K = 100mA
5.0K = 200mA
2.0K = 500mA
1.0K = 1000mA
${COMPANY}
© 2015
TITLE
REV ${REV}
DRAWN ${DRAWN}
CHECKED ${CHECKED}
DATE ${DATE}
DATE ${CURRENT_DATE}
DRG Nº ${DRGNO}
FILE: ${PROJECTNAME}
PAGE: ${#}/${##}
Title:
Size: User
Date:
Rev:
KiCad E.D.A. eeschema 7.0.6
Id: 1/1