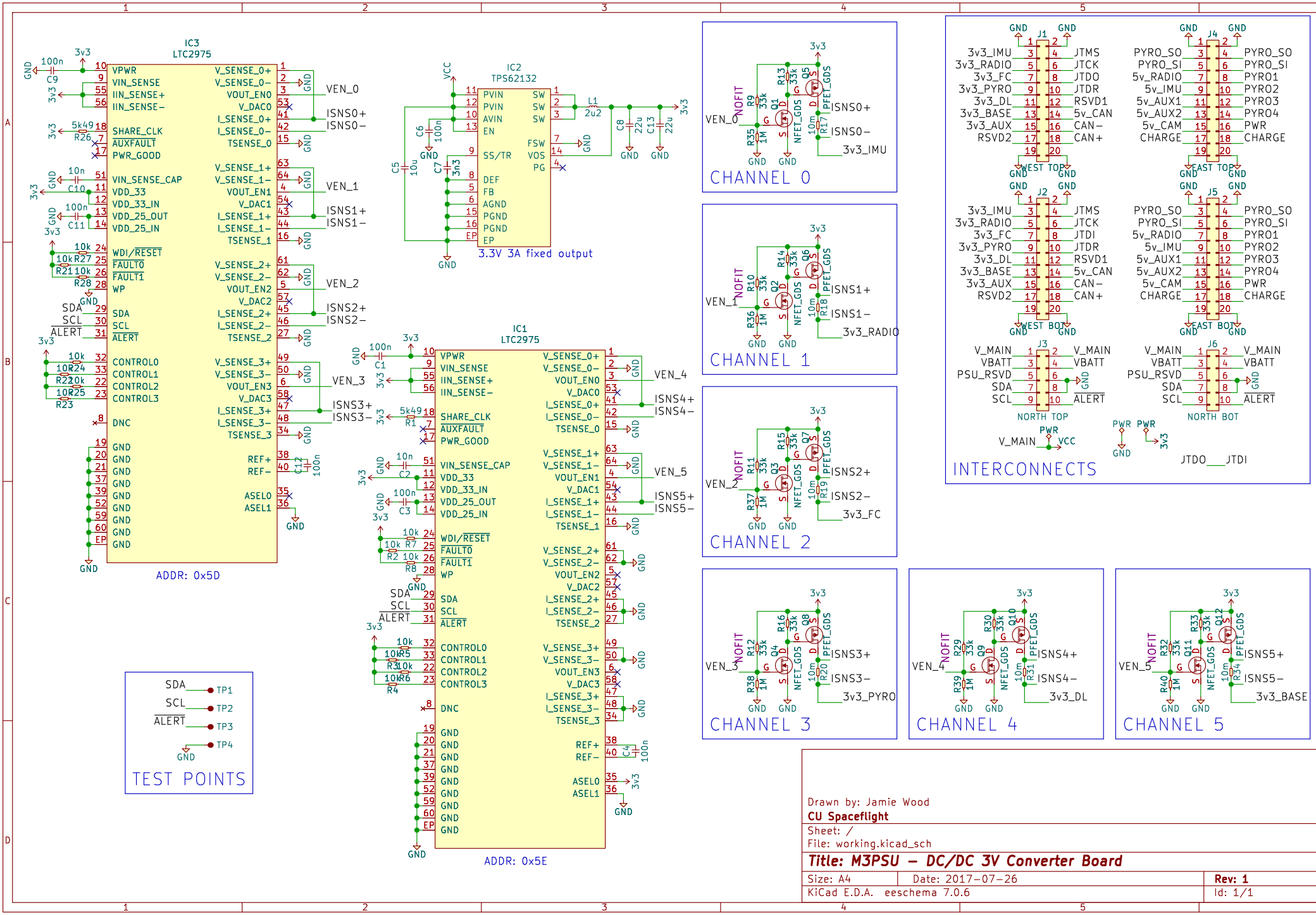
IC3
LTC2975
ADDR: 0x5D
IC2
TPS62132
3.3V 3A fixed output
IC1
LTC2975
ADDR: 0x5E
CHANNEL 0
CHANNEL 1
CHANNEL 2
CHANNEL 3
CHANNEL 4
CHANNEL 5
INTERCONNECTS
TEST POINTS
Drawn by: Jamie Wood
CU Spaceflight
Sheet: /
File: working.kicad_sch
Title: M3PSU – DC/DC 3V Converter Board
Size: A4
Date: 2017-07-26
Rev: 1
KiCad E.D.A. eeschema 7.0.6
Id: 1/1