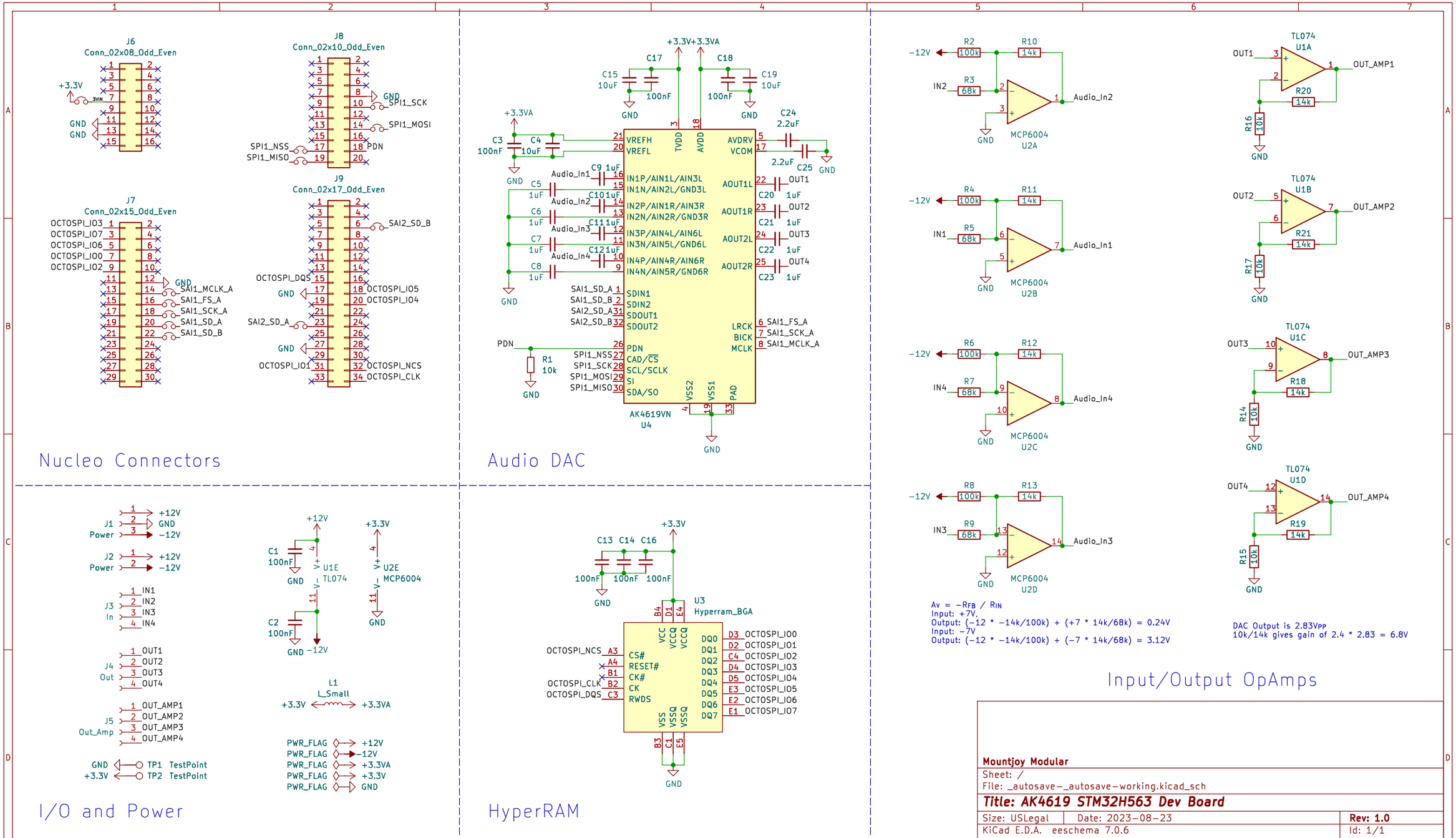
J6
Conn_02x08_Odd_Even
J8
Conn_02x10_Odd_Even
J7
Conn_02x15_Odd_Even
J9
Conn_02x17_Odd_Even
Nucleo Connectors
AK4619VN
U4
Audio DAC
TL074
U1A
U1B
U1C
U1D
MCP6004
U2A
U2B
U2C
U2D
Av = −RFB / RIN
Input: +7V,
Output: (−12 * −14k/100k) + (+7 * 14k/68k) = 0.24V
Input: −7V
Output: (−12 * −14k/100k) + (−7 * 14k/68k) = 3.12V
DAC Output is 2.83VPP
10k/14k gives gain of 2.4 * 2.83 = 6.8V
Input/Output OpAmps
U1E
TL074
U2E
MCP6004
L1
L_Small
I/O and Power
U3
Hyperram_BGA
HyperRAM
Mountjoy Modular
Sheet: /
File: _autosave-_autosave-working.kicad_sch
Title: AK4619 STM32H563 Dev Board
Size: USLegal
Date: 2023-08-23
Rev: 1.0
KiCad E.D.A. eeschema 7.0.6
Id: 1/1