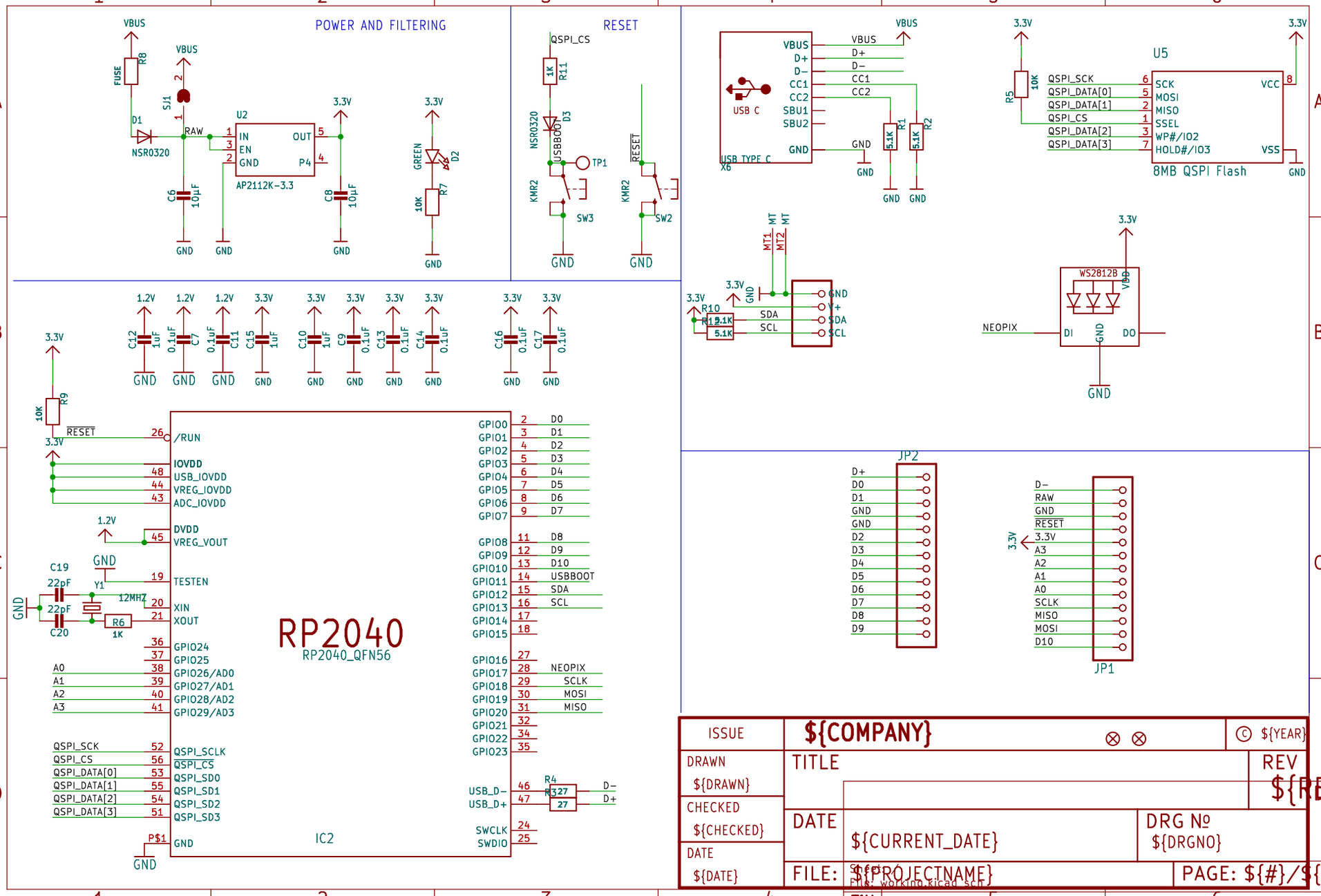
POWER AND FILTERING
RESET
VBUS
FUSE
R8
SJ1
D1
NSR0320
RAW
U2
IN
EN
GND
OUT
P4
AP2112K-3.3
C6
10µF
C8
10µF
3.3V
GREEN
D2
10K
R7
GND
QSPI_CS
1K
R11
NSR0320
D3
USBBOOT
TP1
KMR2
SW3
RESET
SW2
USB C
USB TYPE C
X6
VBUS
D+
D−
CC1
CC2
SBU1
SBU2
GND
5.1K
R1
R2
U5
R5
10K
QSPI_SCK
QSPI_DATA[0]
QSPI_DATA[1]
QSPI_CS
QSPI_DATA[2]
QSPI_DATA[3]
SCK
MOSI
MISO
SSEL
WP#/IO2
HOLD#/IO3
VCC
VSS
8MB QSPI Flash
MT1
MT2
MT
R10
SDA
SCL
V+
WS2812B
VDD
NEOPIX
DI
DO
1.2V
C12
1uF
C7
0.1uF
C11
0.1uF
C15
1uF
C10
1uF
C9
0.1uF
C13
0.1uF
C14
0.1uF
C16
0.1uF
C17
0.1uF
R9
10K
/RUN
IOVDD
USB_IOVDD
VREG_IOVDD
ADC_IOVDD
DVDD
VREG_VOUT
TESTEN
XIN
XOUT
C19
22pF
C20
22pF
Y1
12MHZ
R6
1K
GPIO24
GPIO25
GPIO26/AD0
GPIO27/AD1
GPIO28/AD2
GPIO29/AD3
QSPI_SCLK
QSPI_CS
QSPI_SD0
QSPI_SD1
QSPI_SD2
QSPI_SD3
P$1
IC2
RP2040
RP2040_QFN56
GPIO0
GPIO1
GPIO2
GPIO3
GPIO4
GPIO5
GPIO6
GPIO7
GPIO8
GPIO9
GPIO10
GPIO11
GPIO12
GPIO13
GPIO14
GPIO15
GPIO16
GPIO17
GPIO18
GPIO19
GPIO20
GPIO21
GPIO22
GPIO23
USB_D−
USB_D+
R4
27
SWCLK
SWDIO
JP2
JP1
A0
A1
A2
A3
ISSUE
${COMPANY}
© ${YEAR}
DRAWN
${DRAWN}
TITLE
REV
${REV}
CHECKED
${CHECKED}
DATE
${DATE}
${CURRENT_DATE}
DRG № ${DRGNO}
FILE: ${PROJECTNAME}
PAGE: ${#}/${##}
Title:
Size: User
Date:
Rev:
KiCad E.D.A. eeschema 7.0.6
Id: 1/1