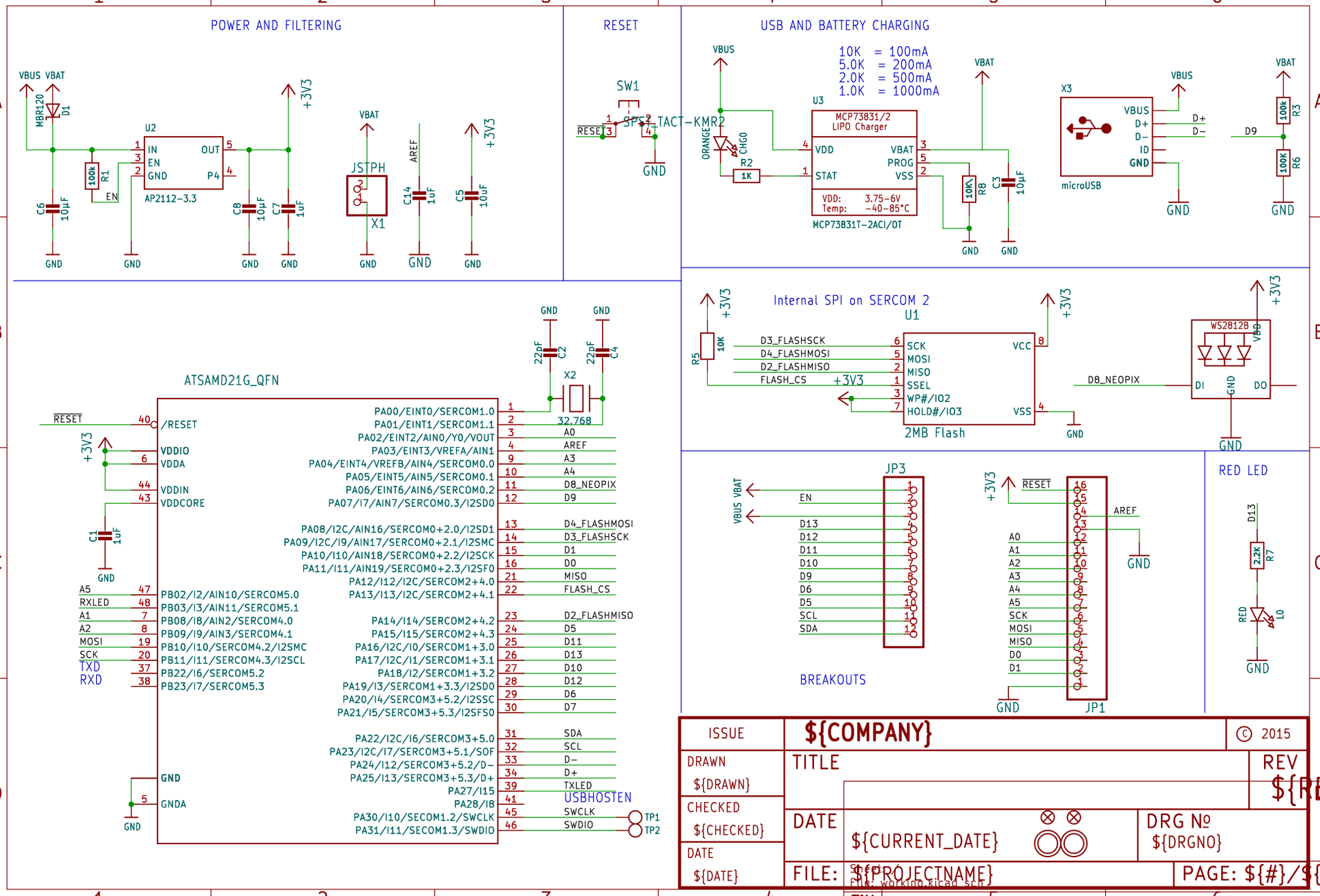
POWER AND FILTERING
VBUS VBAT
MBR120 D1
U2
IN
EN
GND
OUT
P4
AP2112-3.3
100k R1
EN
C6 10µF
C8 10µF
C7 1uF
+3V3
VBAT
JSTPH
X1
AREF
C14 1uF
C5 10uF
GND
RESET
SW1
SPST TACT-KMR2
RESET
USB AND BATTERY CHARGING
VBUS
ORANGE
CHG0
R2 1K
10K = 100mA
5.0K = 200mA
2.0K = 500mA
1.0K = 1000mA
U3
MCP73831/2
LIPO Charger
VDD
STAT
VBAT
PROG
VSS
VDD: 3.75-6V
Temp: -40-85°C
MCP73831T-2ACI/OT
10K R8
C3 10µF
X3
VBUS
D+
D-
ID
GND
microUSB
D9
100k R3
100K R6
Internal SPI on SERCOM 2
U1
R5 10K
D3_FLASHSCK
D4_FLASHMOSI
D2_FLASHMISO
FLASH_CS
SCK
MOSI
MISO
SSEL
WP#/IO2
HOLD#/IO3
VCC
VSS
2MB Flash
WS2812B
VDD
DI
DO
D8_NEOPIX
ATSAMD21G_QFN
22pF C2
22pF C4
X2
32.768
/RESET
VDDIO
VDDA
VDDIN
VDDCORE
C1 1uF
PA00/EINT0/SERCOM1.0 A0
PA01/EINT1/SERCOM1.1 AREF
PA02/EINT2/AIN0/Y0/VOUT A3
PA03/EINT3/VREFA/AIN1 A4
PA04/EINT4/VREFB/AIN4/SERCOM0.0 D8_NEOPIX
PA05/EINT5/AIN5/SERCOM0.1 D9
PA06/EINT6/AIN6/SERCOM0.2
PA07/I7/AIN7/SERCOM0.3/I2SD0
PA08/I2C/AIN16/SERCOM0+2.0/I2SD1 D4_FLASHMOSI
PA09/I2C/I9/AIN17/SERCOM0+2.1/I2SMC D3_FLASHSCK
PA10/I10/AIN18/SERCOM0+2.2/I2SCK D1
PA11/I11/AIN19/SERCOM0+2.3/I2SF0 D0
PA12/I12/I2C/SERCOM2+4.0 MISO
PA13/I13/I2C/SERCOM2+4.1 FLASH_CS
PB02/I2/AIN10/SERCOM5.0 A5
PB03/I3/AIN11/SERCOM5.1 RXLED
PB08/I8/AIN2/SERCOM4.0 A1
PB09/I9/AIN3/SERCOM4.1 A2
PB10/I10/SERCOM4.2/I2SMC MOSI
PB11/I11/SERCOM4.3/I2SCL SCK
PB22/I6/SERCOM5.2 TXD
PB23/I7/SERCOM5.3 RXD
PA14/I14/SERCOM2+4.2 D2_FLASHMISO
PA15/I15/SERCOM2+4.3 D5
PA16/I2C/I0/SERCOM1+3.0 D11
PA17/I2C/I1/SERCOM1+3.1 D13
PA18/I2/SERCOM1+3.2 D10
PA19/I3/SERCOM1+3.3/I2SD0 D12
PA20/I4/SERCOM3+5.2/I2SSC D6
PA21/I5/SERCOM3+5.3/I2SFS0 D7
PA22/I2C/I6/SERCOM3+5.0 SDA
PA23/I2C/I7/SERCOM3+5.1/SOF SCL
PA24/I12/SERCOM3+5.2/D- D-
PA25/I13/SERCOM3+5.3/D+ D+
PA27/I15 TXLED
PA28/I8 USBHOSTEN
PA30/I10/SECOM1.2/SWCLK SWCLK TP1
PA31/I11/SECOM1.3/SWDIO SWDIO TP2
GND
GNDA
JP3
VBUS VBAT
EN
D13
D12
D11
D10
D9
D6
D5
SCL
SDA
BREAKOUTS
JP1
RESET
AREF
A0
A1
A2
A3
A4
A5
SCK
MOSI
MISO
D0
D1
RED LED
D13
2.2K R7
RED L0
ISSUE
${COMPANY}
© 2015
DRAWN ${DRAWN}
TITLE
REV ${REV}
CHECKED ${CHECKED}
DATE ${DATE}
DATE ${CURRENT_DATE}
DRG № ${DRGNO}
FILE: ${PROJECTNAME}
PAGE: ${#}/${##}
Sheet: /
File: working.kicad_sch
Title:
Size: User
Date:
Rev:
KiCad E.D.A. eeschema 7.0.6
Id: 1/1