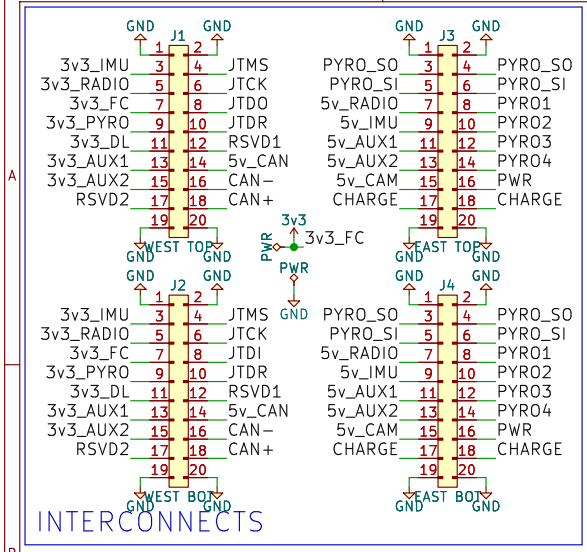

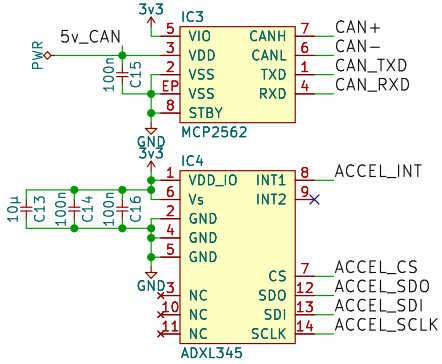

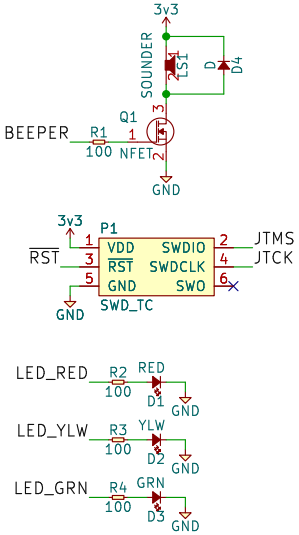

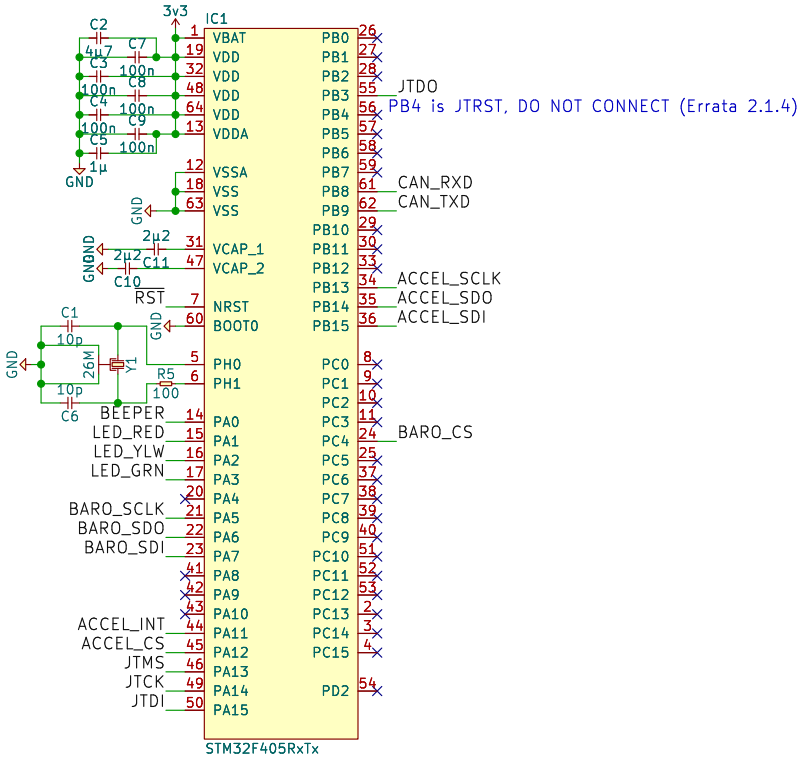

Drawn By: Adam Greig

CU Spaceflight

Sheet: /

File: working.kicad_sch

Title: M3 Flight Computer

Size: A4	Date: 2016-02-10	**Rev: 1**
KiCad E.D.A. eeschema 7.0.6		Id: 1/1