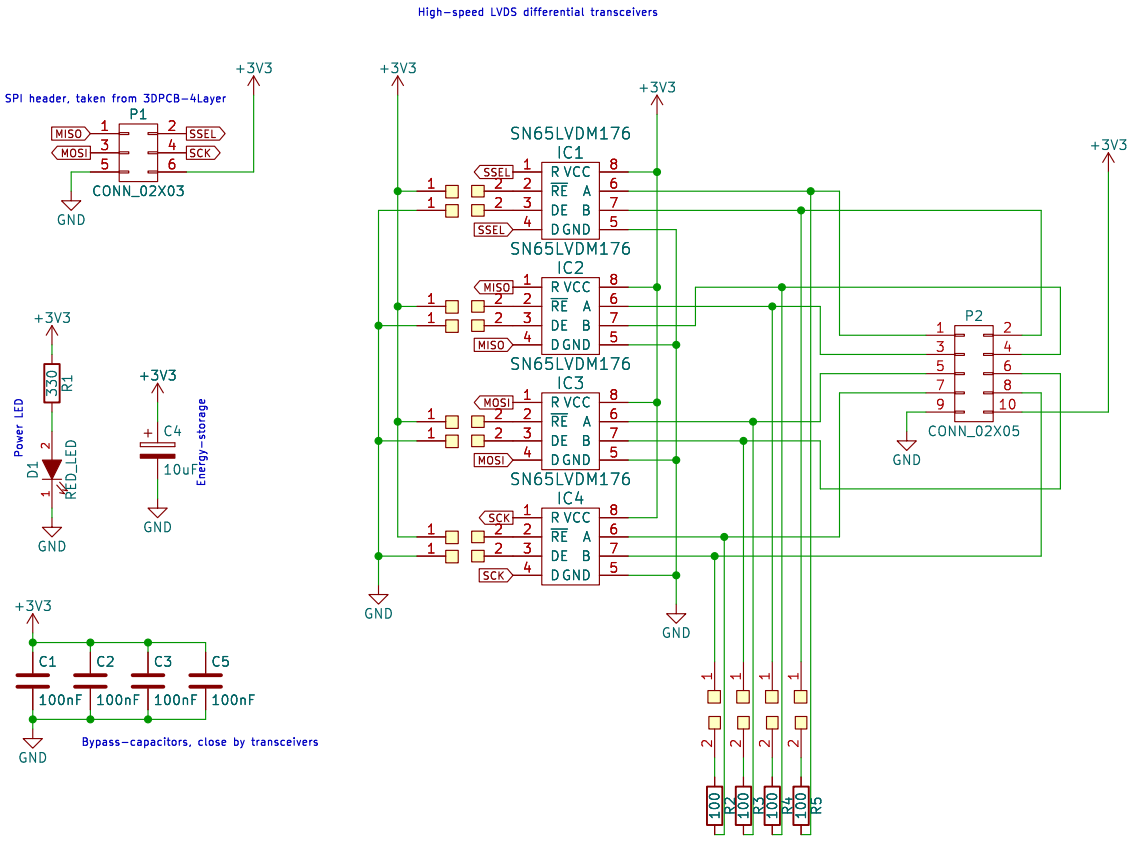

LercheTech

Sheet: /

File: working.kicad_sch

Title: Differential transceiver high-speed SPI

Size: A4	Date: 2016-12-02	Rev: A
KiCad E.D.A. eeschema 7.0.6		Id: 1/1