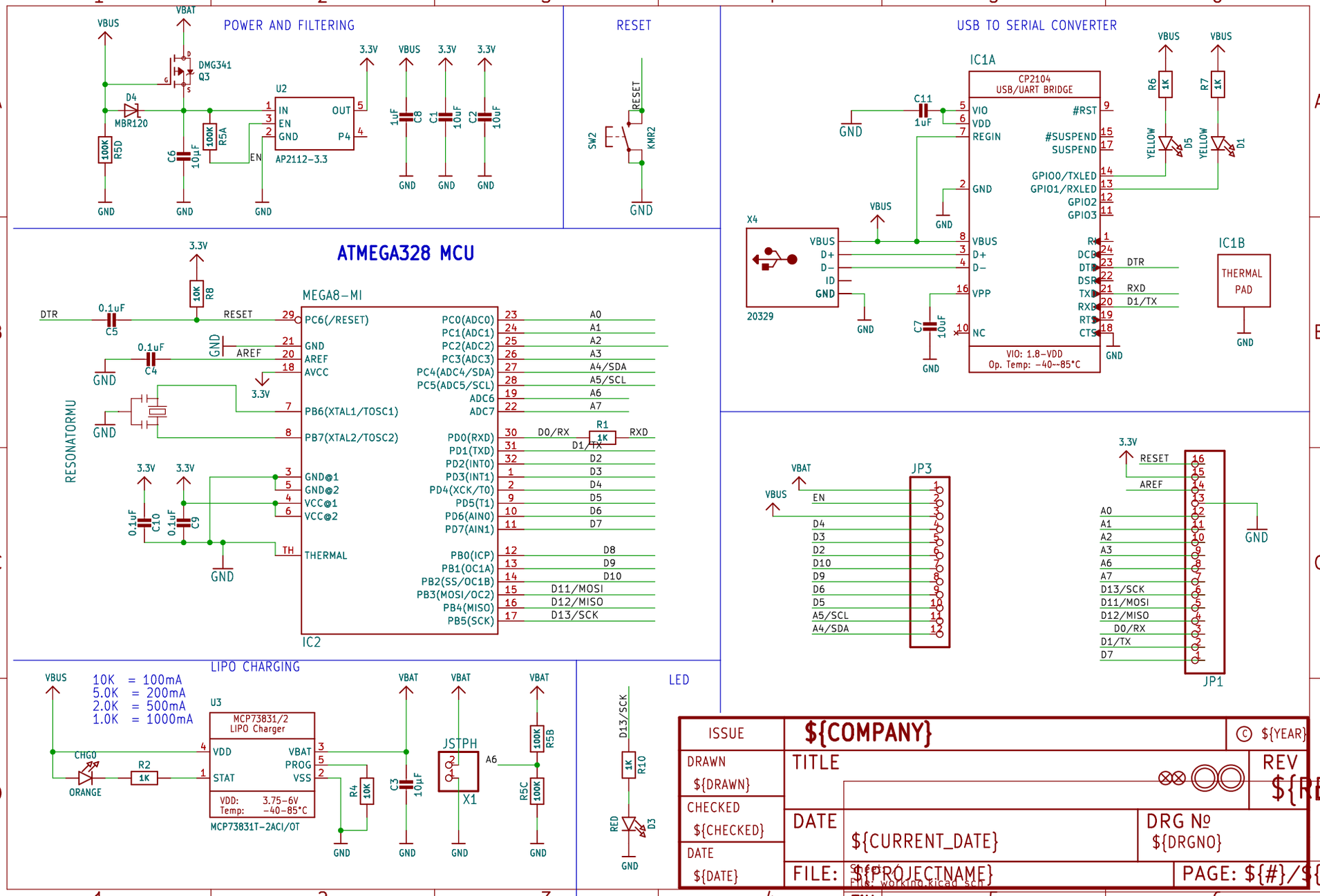
POWER AND FILTERING
VBUS
VBAT
DMG341
Q3
D4
MBR120
100K
R5D
C6
10µF
100K
R5A
U2
IN
EN
GND
OUT
P4
AP2112-3.3
EN
3.3V
VBUS
3.3V
3.3V
1uF
C8
C1
10uF
C2
10uF
GND
RESET
RESET
SW2
KMR2
GND
USB TO SERIAL CONVERTER
IC1A
CP2104
USB/UART BRIDGE
C11
1uF
VIO
VDD
REGIN
GND
#RST
#SUSPEND
SUSPEND
GPIO0/TXLED
GPIO1/RXLED
GPIO2
GPIO3
R
DCD
DTR
DSR
TXD
RXD
RTS
CTS
VPP
NC
VIO: 1.8-VDD
Op. Temp: -40--85°C
R6
1K
R7
1K
YELLOW
D5
YELLOW
D1
X4
VBUS
D+
D-
ID
GND
20329
C7
10uF
IC1B
THERMAL
PAD
DTR
RXD
D1/TX
ATMEGA328 MCU
3.3V
10K
R8
DTR
0.1uF
C5
RESET
MEGA8-MI
PC6(/RESET)
GND
AREF
AVCC
PB6(XTAL1/TOSC1)
PB7(XTAL2/TOSC2)
GND@1
GND@2
VCC@1
VCC@2
THERMAL
PC0(ADC0)
PC1(ADC1)
PC2(ADC2)
PC3(ADC3)
PC4(ADC4/SDA)
PC5(ADC5/SCL)
ADC6
ADC7
PD0(RXD)
PD1(TXD)
PD2(INT0)
PD3(INT1)
PD4(XCK/T0)
PD5(T1)
PD6(AIN0)
PD7(AIN1)
PB0(ICP)
PB1(OC1A)
PB2(SS/OC1B)
PB3(MOSI/OC2)
PB4(MISO)
PB5(SCK)
A0
A1
A2
A3
A4/SDA
A5/SCL
A6
A7
D0/RX
R1
1K
RXD
D1/TX
D2
D3
D4
D5
D6
D7
D8
D9
D10
D11/MOSI
D12/MISO
D13/SCK
0.1uF
C4
RESONATORMU
0.1uF
C10
0.1uF
C9
IC2
JP3
VBAT
VBUS
EN
D4
D3
D2
D10
D9
D6
D5
A5/SCL
A4/SDA
JP1
3.3V
RESET
AREF
A0
A1
A2
A3
A6
A7
D13/SCK
D11/MOSI
D12/MISO
D0/RX
D1/TX
D7
GND
LIPO CHARGING
VBUS
10K = 100mA
5.0K = 200mA
2.0K = 500mA
1.0K = 1000mA
U3
MCP73831/2
LIPO Charger
VDD
STAT
VBAT
PROG
VSS
VDD: 3.75-6V
Temp: -40-85°C
MCP73831T-2ACI/OT
CHG0
ORANGE
R2
1K
R4
10K
C3
10µF
VBAT
VBAT
JSTPH
X1
A6
VBAT
100K
R5B
R5C
100K
LED
D13/SCK
1K
R10
RED
D3
GND
ISSUE
${COMPANY}
© ${YEAR}
DRAWN
${DRAWN}
TITLE
REV
${REV}
CHECKED
${CHECKED}
DATE
${CURRENT_DATE}
DRG №
${DRGNO}
DATE
${DATE}
FILE: ${PROJECTNAME}
PAGE: ${#}/${##}
Title:
Size: User
Date:
Rev:
KiCad E.D.A. eeschema 7.0.6
Id: 1/1