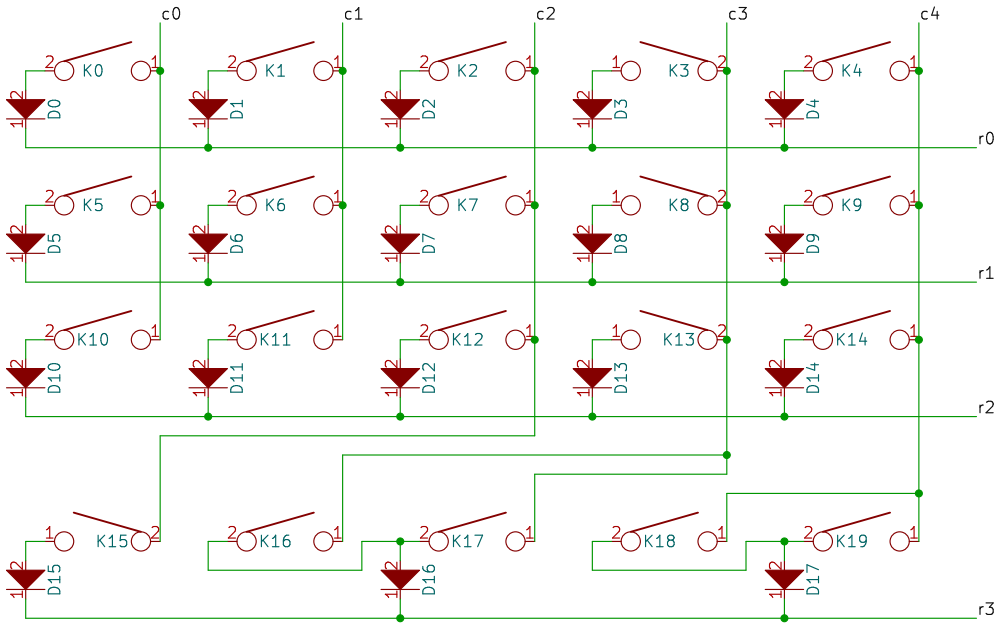

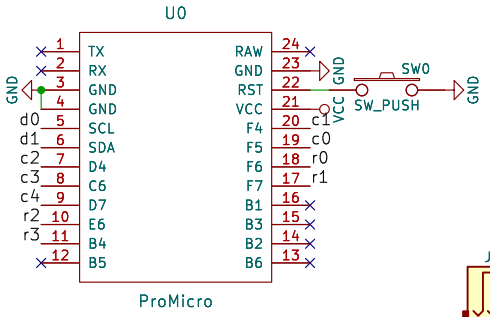

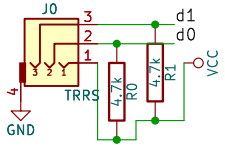

jtallbean

Sheet: /

File: _autosave-_autosave-working.kicad_sch

Title: split_steno

Size: A4	Date: 2018-02-28	**Rev: 1.0**
KiCad E.D.A. eeschema 7.0.6		Id: 1/1