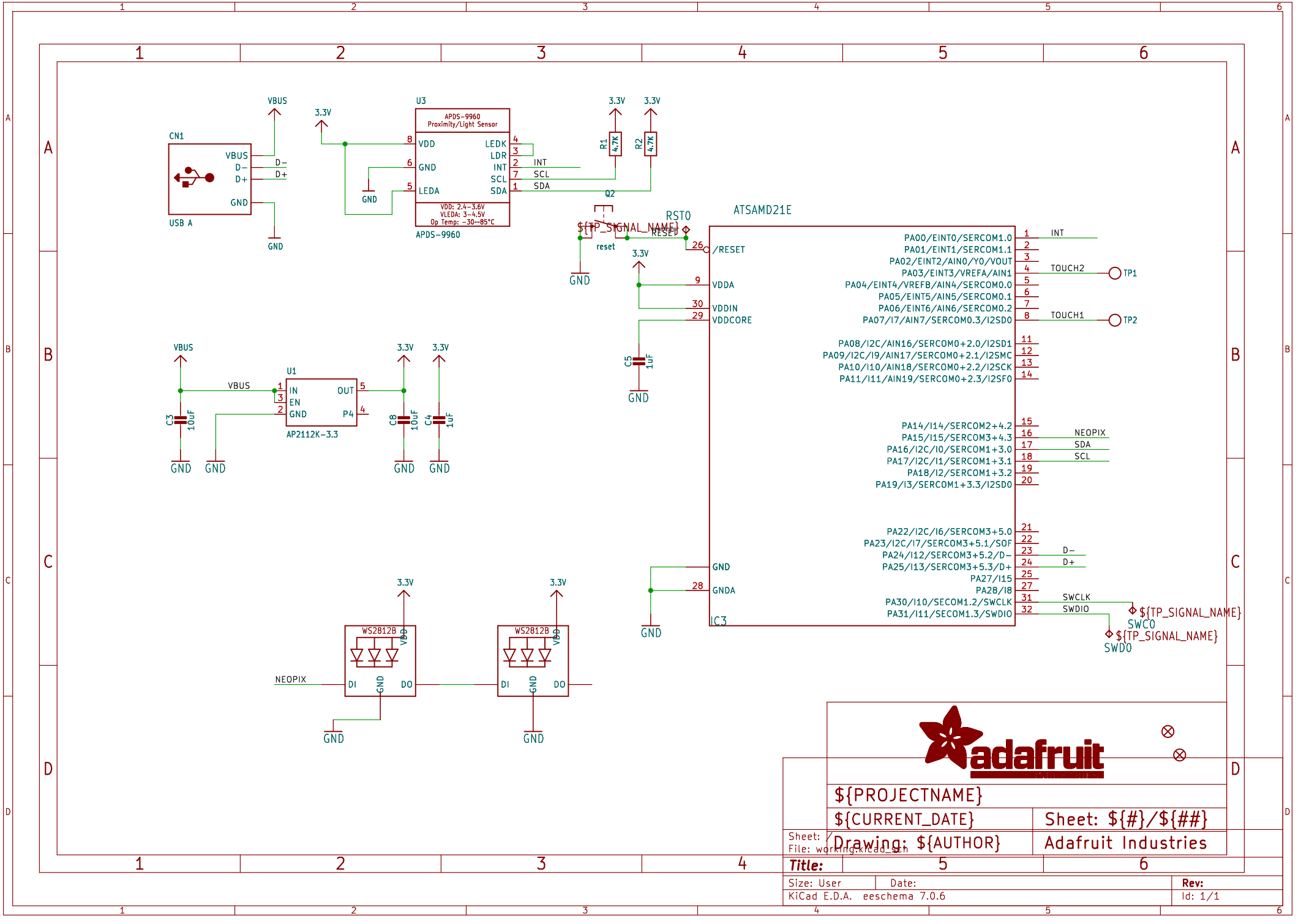
CN1
USB A
VBUS
D−
D+
GND
3.3V
U3
APDS-9960
Proximity/Light Sensor
VDD
GND
LEDA
LEDK
LDR
INT
SCL
SDA
VDD: 2.4-3.6V
VLEDA: 3-4.5V
Op Temp: -30--85°C
R1 4.7K
R2 4.7K
Q2
RST0
${TP_SIGNAL_NAME}
RESET
reset
ATSAMD21E
/RESET
VDDA
VDDIN
VDDCORE
C5 1uF
PA00/EINT0/SERCOM1.0
PA01/EINT1/SERCOM1.1
PA02/EINT2/AIN0/Y0/VOUT
PA03/EINT3/VREFA/AIN1
PA04/EINT4/VREFB/AIN4/SERCOM0.0
PA05/EINT5/AIN5/SERCOM0.1
PA06/EINT6/AIN6/SERCOM0.2
PA07/I7/AIN7/SERCOM0.3/I2SD0
PA08/I2C/AIN16/SERCOM0+2.0/I2SD1
PA09/I2C/I9/AIN17/SERCOM0+2.1/I2SMC
PA10/I10/AIN18/SERCOM0+2.2/I2SCK
PA11/I11/AIN19/SERCOM0+2.3/I2SF0
PA14/I14/SERCOM2+4.2
PA15/I15/SERCOM3+4.3
PA16/I2C/I0/SERCOM1+3.0
PA17/I2C/I1/SERCOM1+3.1
PA18/I2/SERCOM1+3.2
PA19/I3/SERCOM1+3.3/I2SD0
PA22/I2C/I6/SERCOM3+5.0
PA23/I2C/I7/SERCOM3+5.1/SOF
PA24/I12/SERCOM3+5.2/D−
PA25/I13/SERCOM3+5.3/D+
PA27/I15
PA28/I8
PA30/I10/SECOM1.2/SWCLK
PA31/I11/SECOM1.3/SWDIO
GND
GNDA
IC3
INT
TOUCH2
TP1
TOUCH1
TP2
NEOPIX
SDA
SCL
D−
D+
SWCLK
SWDIO
${TP_SIGNAL_NAME}
SWCO
${TP_SIGNAL_NAME}
SWDO
U1
AP2112K-3.3
IN
EN
GND
OUT
P4
C3 10uF
C8 10uF
C4 1uF
WS2812B
DI
DO
VDD
NEOPIX
adafruit
${PROJECTNAME}
${CURRENT_DATE}
Sheet: ${#}/${##}
Drawing: ${AUTHOR}
Adafruit Industries
Sheet: /
File: working.kicad_sch
Title:
Size: User
Date:
Rev:
KiCad E.D.A. eeschema 7.0.6
Id: 1/1