Copyright Anders E E Wallin, 2020.

This documentation describes Open Hardware and is licensed under the CERN OHL v. 1.2.
You may redistribute and modify this documentation under the terms of the
CERN OHL v.1.2. (http://ohwr.org/cernohl).
This documentation is distributed
WITHOUT ANY EXPRESS OR IMPLIED WARRANTY, INCLUDING OF
MERCHANTABILITY, SATISFACTORY QUALITY AND FITNESS FOR A
PARTICULAR PURPOSE. Please see the CERN OHL v.1.2 for applicable
conditions

See SFP document
INF-8074.PDF
INF-8074i Specification for
SFP (Small Formfactor Pluggable) Transceiver

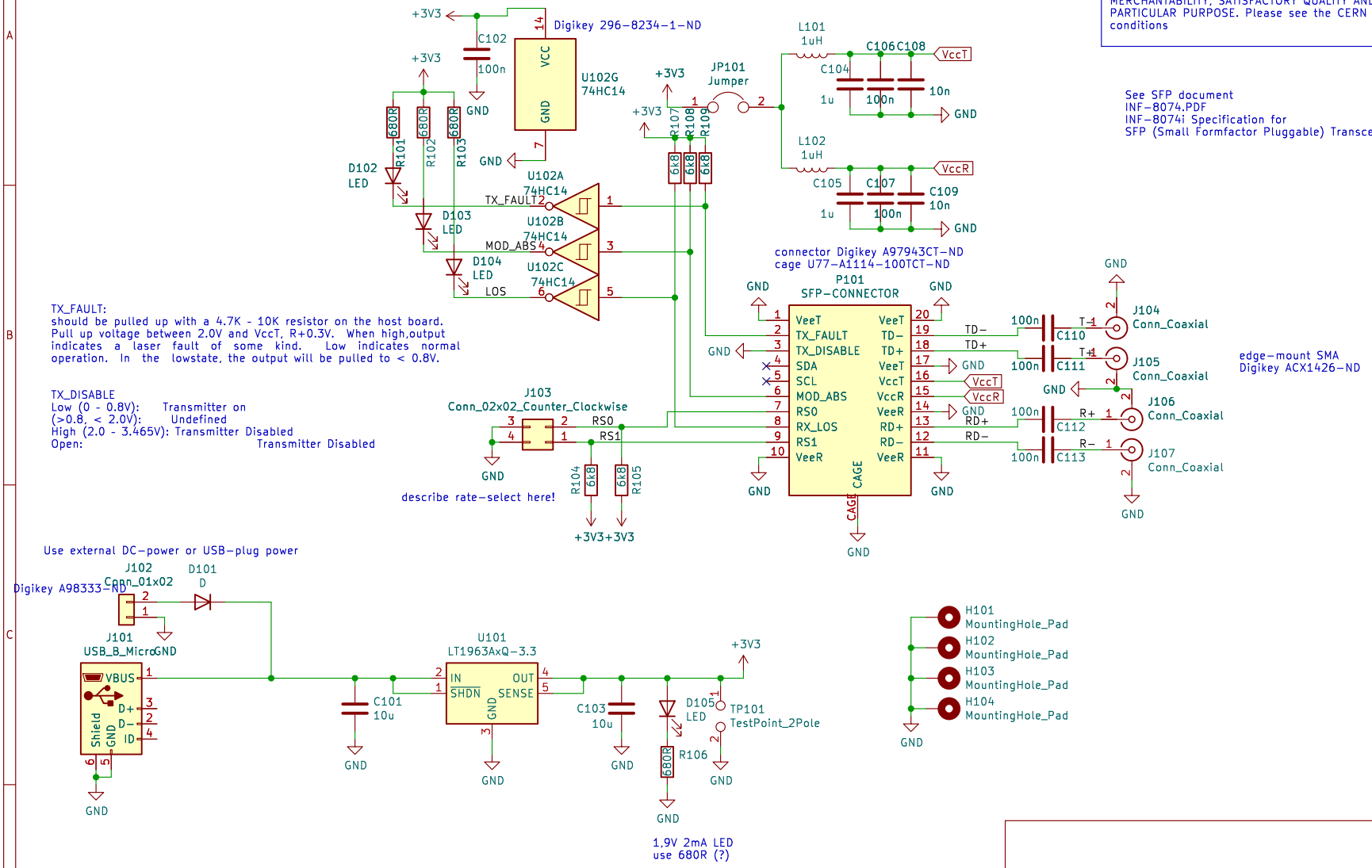


TX_FAULT:
should be pulled up with a 4.7K - 10K resistor on the host board.
Pull up voltage between 2.0V and VccT, R+0.3V. When high,output indicates a laser fault of some kind. Low indicates normal operation. In the lowstate, the output will be pulled to < 0.8V.

TX_DISABLE
Low (0 - 0.8V): Transmitter on
(>0.8, < 2.0V): Undefined
High (2.0 - 3.465V): Transmitter Disabled
Open: Transmitter Disabled

1st PCB-run 2018-11-25
**Anders.e.e.Wallin "at" gmail.com**

Sheet: /
File: _autosave-working.kicad_sch

**Title: SFP Breakout Board**

| | | |
|---|---|---|
| Size: A4 | Date: | **Rev: 2018.11** |
| KiCad E.D.A. eeschema 7.0.6 | | Id: 1/1 |