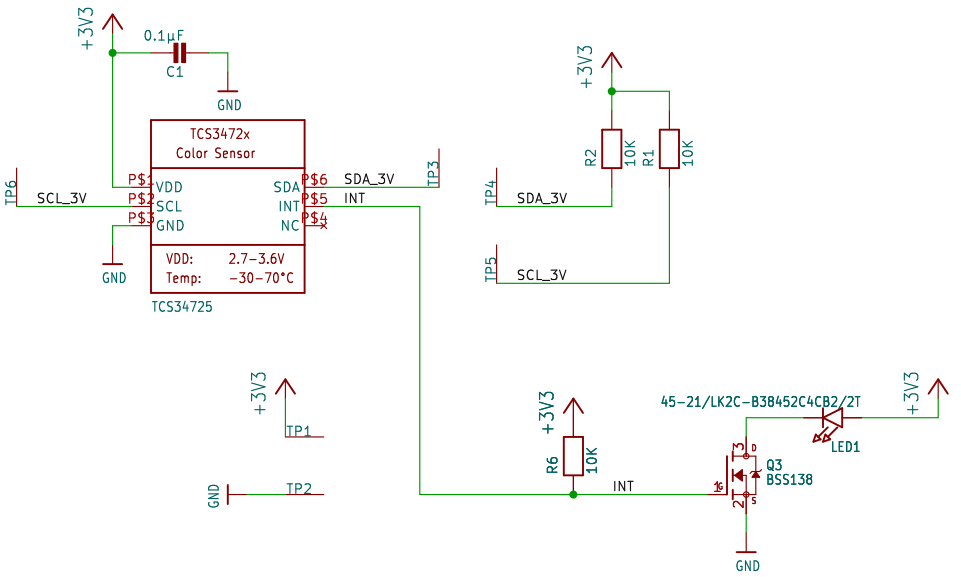

Sheet: /
File: _autosave-working.kicad_sch

Title:

Size: User | Date: | Rev:
KiCad E.D.A. eeschema 7.0.6 | Id: 1/1

Drawing: ${AUTHOR}
Adafruit Industries
${CURRENT_DATE}
Sheet: ${#}/${##}
${PROJECTNAME}