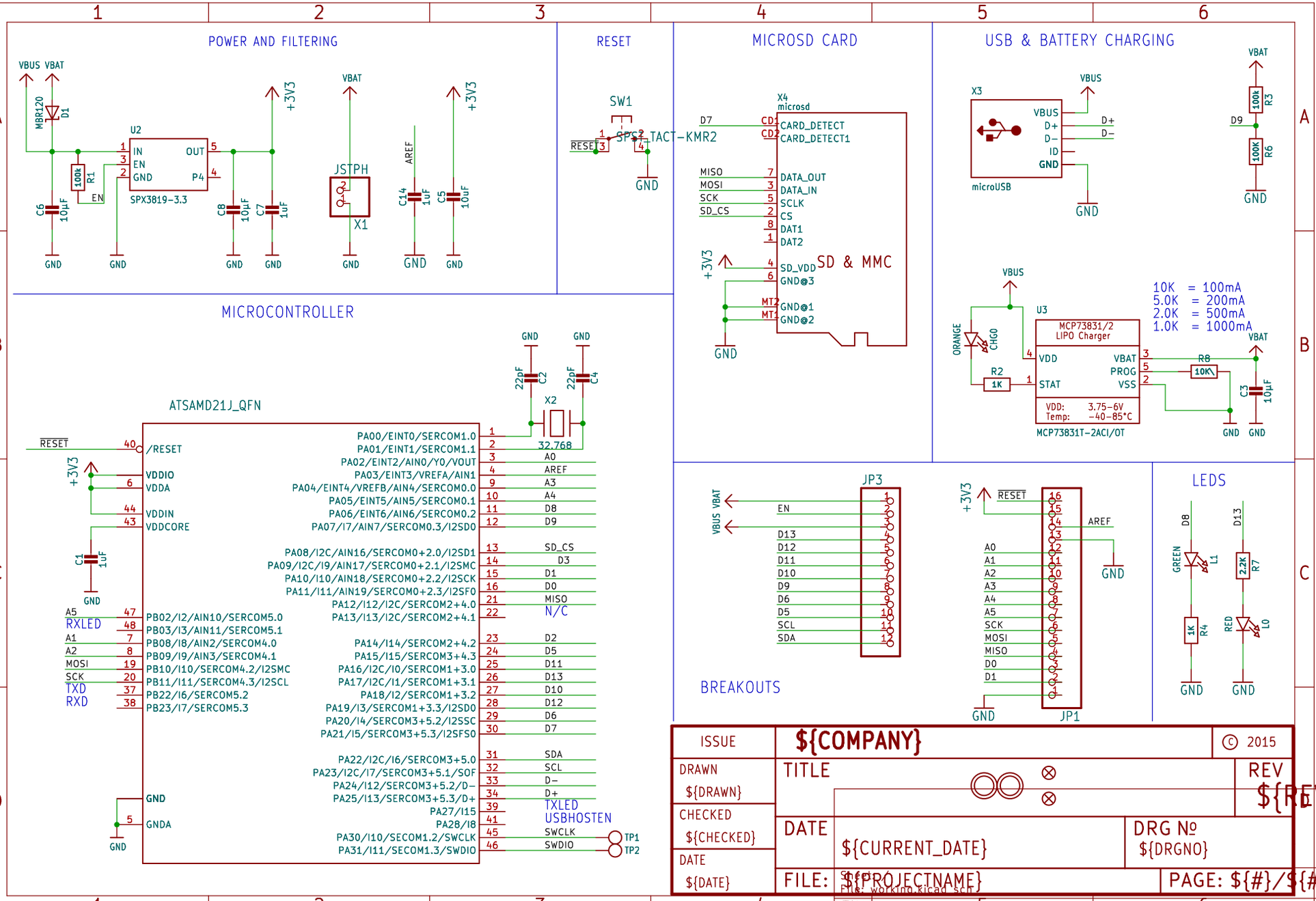
POWER AND FILTERING
VBUS VBAT
MBR120 D1
U2
IN OUT
EN
GND P4
SPX3819-3.3
100k R1
EN
C6 10µF
C8 10µF
C7 1uF
+3V3
VBAT
JSTPH
X1
AREF
C14 1uF
C5 10uF
GND
RESET
SW1
SPST-TACT-KMR2
RESET
MICROSD CARD
X4
microsd
D7
CD1 CARD_DETECT
CD2 CARD_DETECT1
MISO DATA_OUT
MOSI DATA_IN
SCK SCLK
SD_CS CS
DAT1
DAT2
+3V3
SD_VDD
GND@3
SD & MMC
MT2 GND@1
MT1 GND@2
USB & BATTERY CHARGING
X3
VBUS
D+
D−
ID
GND
microUSB
D9
100k R3
100K R6
MICROCONTROLLER
ATSAMD21J_QFN
22pF C2
22pF C4
X2
32.768
RESET
/RESET
VDDIO
VDDA
VDDIN
VDDCORE
C1 1uF
A5 RXLED
A1
A2
MOSI
SCK TXD
RXD
PA00/EINT0/SERCOM1.0
PA01/EINT1/SERCOM1.1
PA02/EINT2/AIN0/Y0/VOUT
PA03/EINT3/VREFA/AIN1
PA04/EINT4/VREFB/AIN4/SERCOM0.0
PA05/EINT5/AIN5/SERCOM0.1
PA06/EINT6/AIN6/SERCOM0.2
PA07/I7/AIN7/SERCOM0.3/I2SD0
PA08/I2C/AIN16/SERCOM0+2.0/I2SD1
PA09/I2C/I9/AIN17/SERCOM0+2.1/I2SMC
PA10/I10/AIN18/SERCOM0+2.2/I2SCK
PA11/I11/AIN19/SERCOM0+2.3/I2SF0
PA12/I12/I2C/SERCOM2+4.0
PA13/I13/I2C/SERCOM2+4.1
PB02/I2/AIN10/SERCOM5.0
PB03/I3/AIN11/SERCOM5.1
PB08/I8/AIN2/SERCOM4.0
PB09/I9/AIN3/SERCOM4.1
PB10/I10/SERCOM4.2/I2SMC
PB11/I11/SERCOM4.3/I2SCL
PB22/I6/SERCOM5.2
PB23/I7/SERCOM5.3
PA14/I14/SERCOM2+4.2
PA15/I15/SERCOM3+4.3
PA16/I2C/I0/SERCOM1+3.0
PA17/I2C/I1/SERCOM1+3.1
PA18/I2/SERCOM1+3.2
PA19/I3/SERCOM1+3.3/I2SD0
PA20/I4/SERCOM3+5.2/I2SSC
PA21/I5/SERCOM3+5.3/I2SFS0
PA22/I2C/I6/SERCOM3+5.0
PA23/I2C/I7/SERCOM3+5.1/SOF
PA24/I12/SERCOM3+5.2/D−
PA25/I13/SERCOM3+5.3/D+
PA27/I15
PA28/I8
PA30/I10/SECOM1.2/SWCLK
PA31/I11/SECOM1.3/SWDIO
A0
AREF
A3
A4
D8
D9
SD_CS
D3
D1
D0
MISO
N/C
D2
D5
D11
D13
D10
D12
D6
D7
SDA
SCL
D−
D+
TXLED
USBHOSTEN
SWCLK
SWDIO
TP1
TP2
GND
GNDA
MCP73831/2
LIPO Charger
VDD
STAT
VBAT
PROG
VSS
VDD: 3.75-6V
Temp: -40-85°C
MCP73831T-2ACI/OT
U3
ORANGE
CHGO
R2 1K
R8 10K
C3 10µF
10K = 100mA
5.0K = 200mA
2.0K = 500mA
1.0K = 1000mA
BREAKOUTS
JP3
VBUS VBAT
EN
D13
D12
D11
D10
D9
D6
D5
SCL
SDA
JP1
RESET
AREF
A0
A1
A2
A3
A4
A5
SCK
MOSI
MISO
D0
D1
LEDS
D8
GREEN L1
1K R4
D13
2.2K R7
RED L0
ISSUE
${COMPANY}
© 2015
DRAWN ${DRAWN}
TITLE
REV ${REV}
CHECKED ${CHECKED}
DATE ${CURRENT_DATE}
DRG № ${DRGNO}
DATE ${DATE}
FILE: ${PROJECTNAME}
PAGE: ${#}/${##}
Title:
Size: User
Date:
Rev:
KiCad E.D.A. eeschema 7.0.6
Id: 1/1