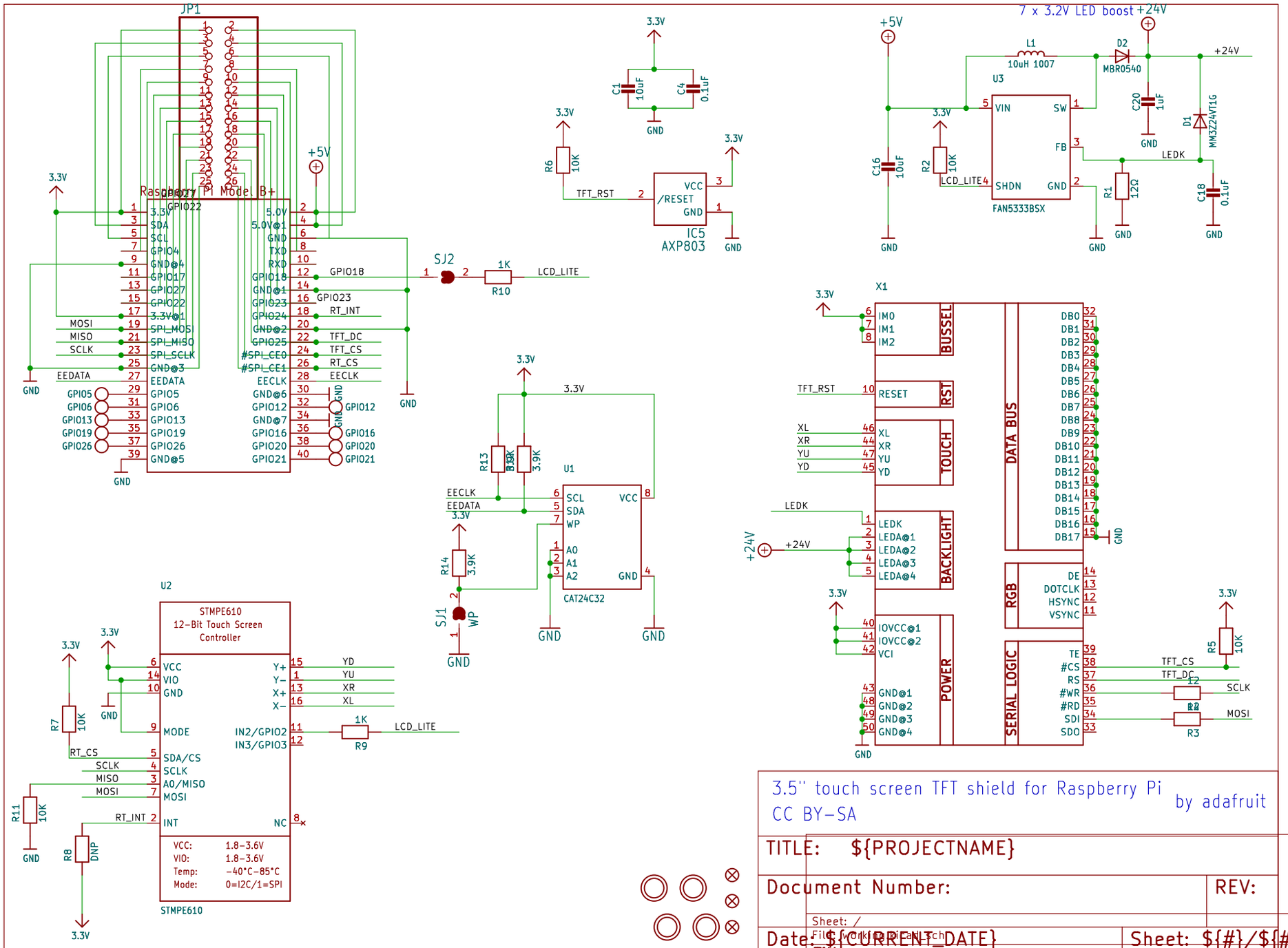
JP1
Raspberry Pi Mode, B+
7 x 3.2V LED boost +24V
U3
FAN5333BSX
IC5
AXP803
SJ2
U1
CAT24C32
SJ1
X1
DATA BUS
BUSSEL
RST
TOUCH
BACKLIGHT
POWER
RGB
SERIAL LOGIC
U2
STMPE610
12-Bit Touch Screen Controller
VCC: 1.8-3.6V
VIO: 1.8-3.6V
Temp: -40°C-85°C
Mode: 0=I2C/1=SPI
STMPE610
3.5" touch screen TFT shield for Raspberry Pi
CC BY-SA
by adafruit
TITLE: ${PROJECTNAME}
Document Number:
REV:
Date: ${CURRENT_DATE}
Sheet: ${#}/${##}
Size: User
Date:
Rev:
KiCad E.D.A. eeschema 7.0.6
Id: 1/1