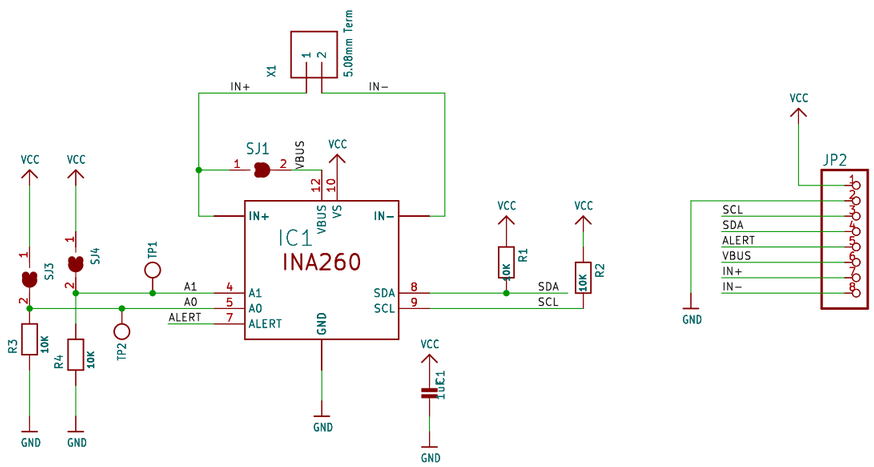

${PROJECTNAME}

${CURRENT_DATE}

Sheet: ${#}/${##}

Sheet: /
File: working.kicad_sch

Adafruit Industries

Title:

Size: User

Date:

Rev:

KiCad E.D.A. eeschema 7.0.6

Id: 1/1