INTERCONNECTS:

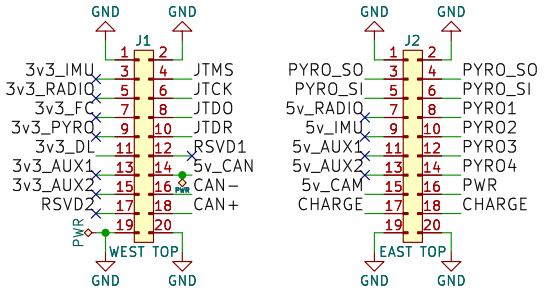

EXTERNAL CONNECTORS:

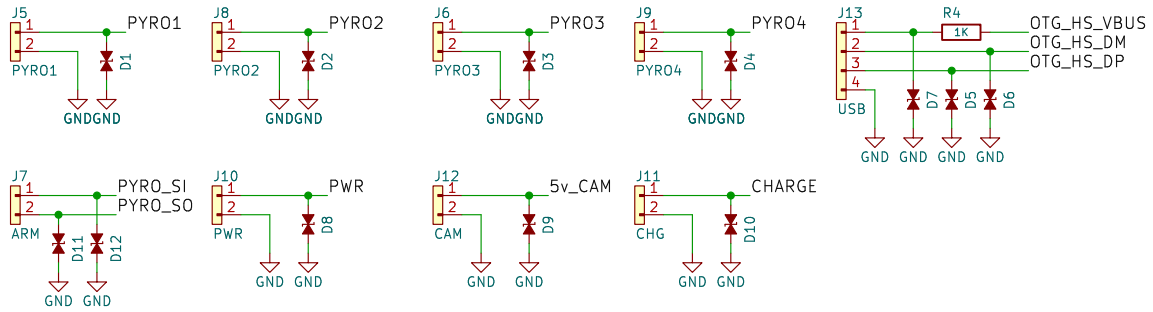

STM32F405:

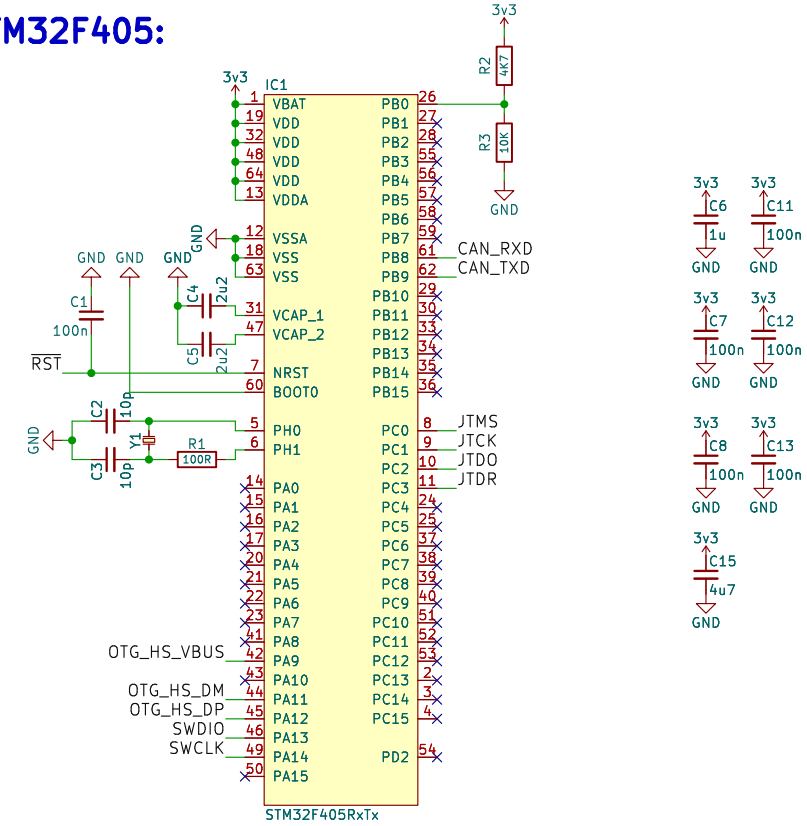

Master JTDO -> JTDI of first target
JTDO of last target -> JTDR Master

MCU Peripherals:

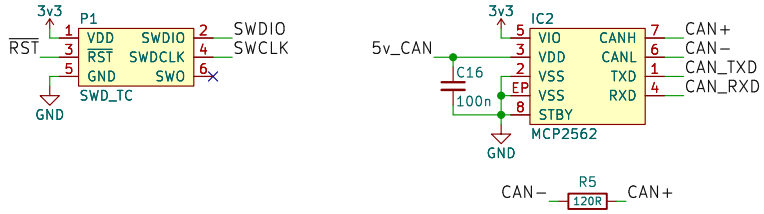

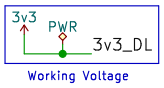

Matt Coates
Cambrudge University Space Flight

Sheet: /
File: working.kicad_sch

Title: Martlet 3 Base

Size: A4	Date: 2016-06-11	**Rev: 1**
KiCad E.D.A. eeschema 7.0.6		Id: 1/1