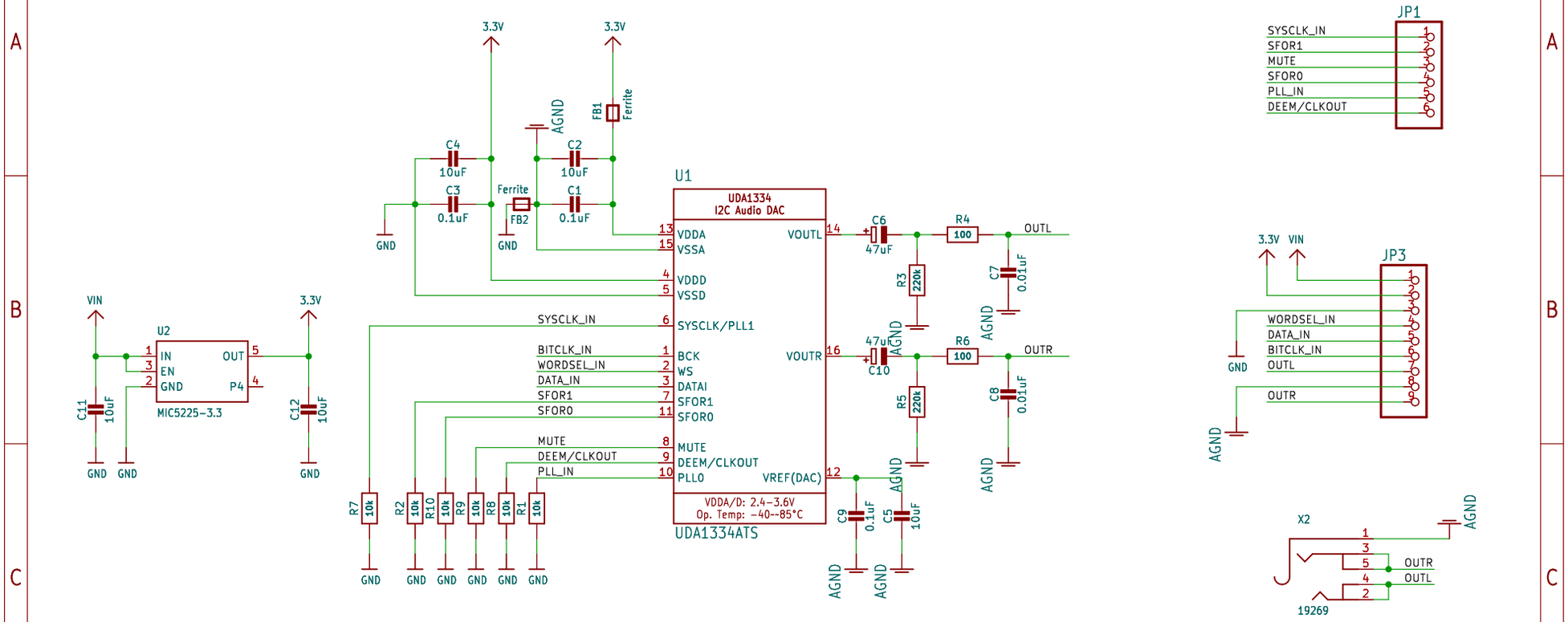

SFOR0	SFOR1	Function
LOW	LOW	I2S-Bus Input
LOW	HIGH	LSB-justified 16 bits input
HIGH	LOW	LSB-justified 20 bits input
HIGH	HIGH	LSB-justified 24 bits input

MUTE:
LOW = Mute Off
HIGH = Mute On

DEEM:
LOW = De-emphasis off
HIGH = De-emphasis on

ISSUE	${COMPANY}	© ${YEAR}
DRAWN ${DRAWN}	TITLE	REV ${REV}
CHECKED ${CHECKED}	DATE ${CURRENT_DATE}	DRG № ${DRGNO}
DATE ${DATE}	FILE: ${PROJECTNAME}	PAGE: ${#}/${##}

Title:
Size: User Date: Rev:
KiCad E.D.A. eeschema 7.0.6 Id: 1/1