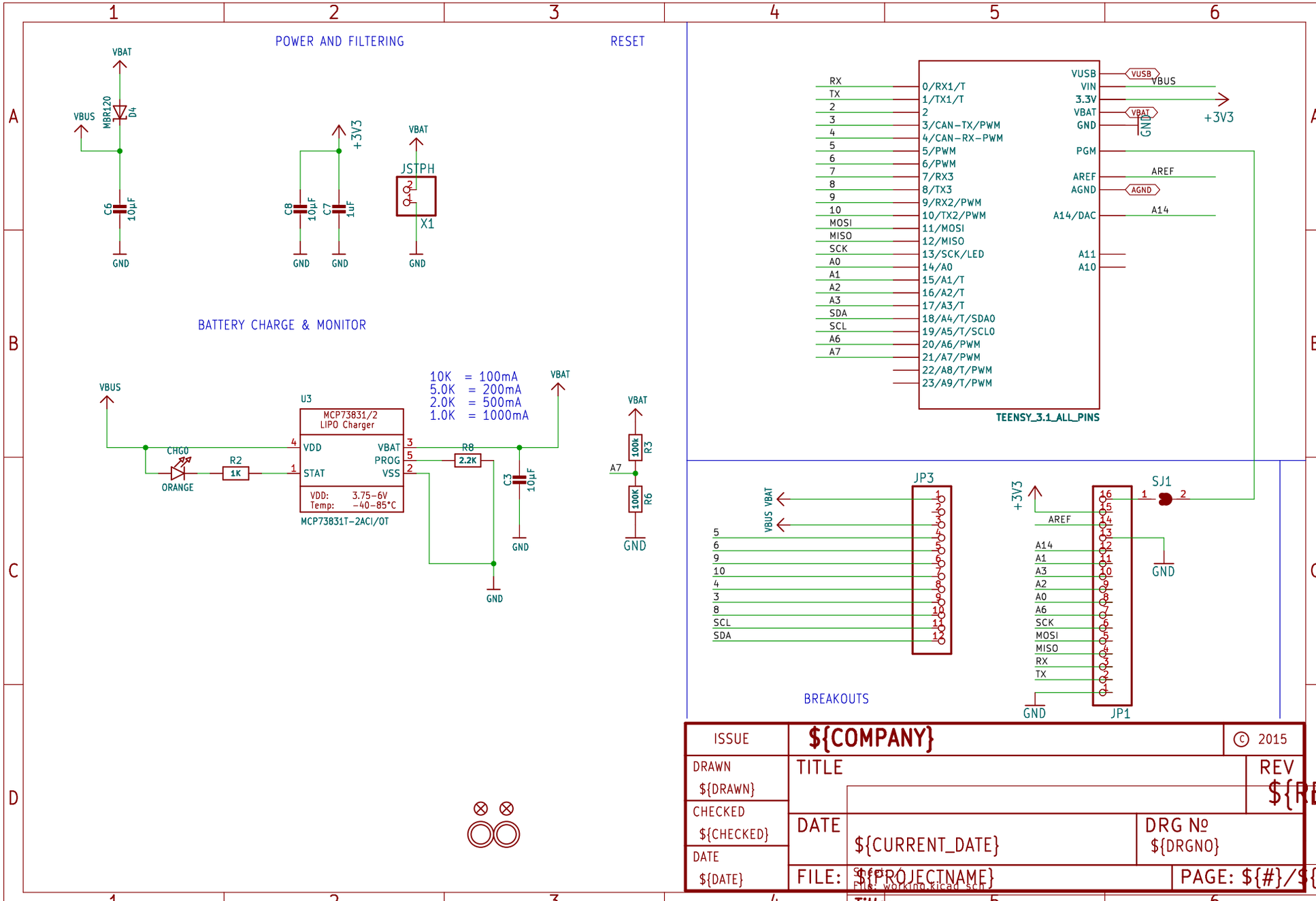
POWER AND FILTERING
RESET
VBAT
VBUS
MBR120
D4
C6
10µF
GND
+3V3
C8
10µF
C7
1uF
JSTPH
X1
BATTERY CHARGE & MONITOR
U3
MCP73831/2
LIPO Charger
VDD
STAT
VBAT
PROG
VSS
VDD: 3.75-6V
Temp: -40-85°C
MCP73831T-2ACI/OT
CHGO
ORANGE
R2
1K
R8
2.2K
C3
10µF
10K = 100mA
5.0K = 200mA
2.0K = 500mA
1.0K = 1000mA
A7
100K
R3
R6
TEENSY_3.1_ALL_PINS
RX
TX
MOSI
MISO
SCK
SDA
SCL
VUSB
VIN
3.3V
PGM
AREF
AGND
A14/DAC
A11
A10
A14
JP3
JP1
SJ1
BREAKOUTS
ISSUE
${COMPANY}
© 2015
DRAWN
${DRAWN}
TITLE
REV
${REV}
CHECKED
${CHECKED}
DATE
${CURRENT_DATE}
DRG №
${DRGNO}
DATE
${DATE}
FILE: ${PROJECTNAME}
PAGE: ${#}/${##}
Title:
Size: User
Date:
Rev:
KiCad E.D.A. eeschema 7.0.6
Id: 1/1