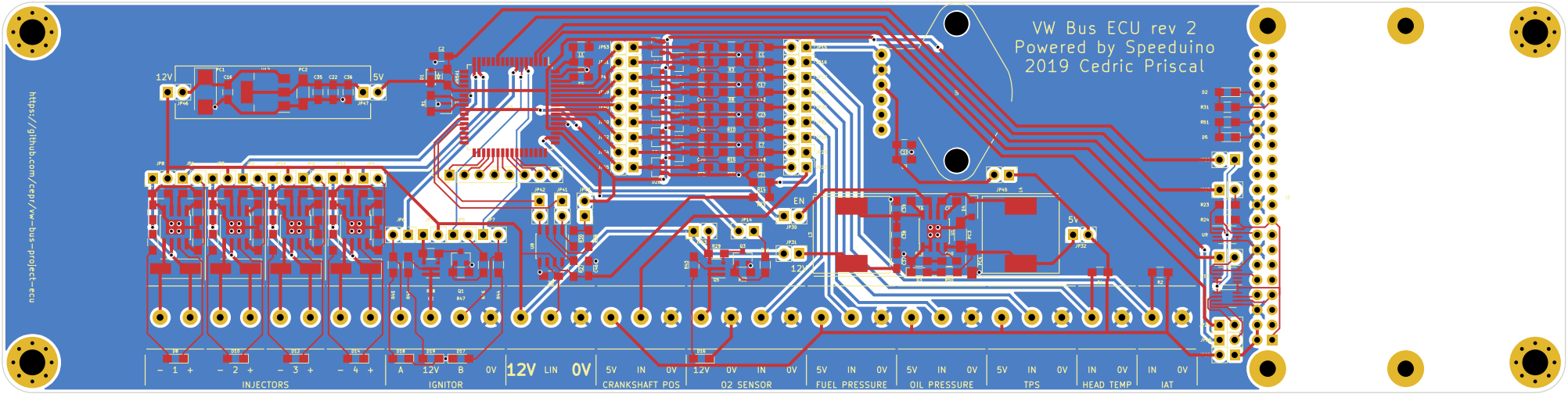
VW Bus ECU rev 2
Powered by Speeduino
2019 Cedric Priscal
https://github.com/cdpi/vw-bus-project-ecu
12V
5V
EN
- 1 +
- 2 +
- 3 +
- 4 +
INJECTORS
A
12V
B
0V
IGNITOR
12V
LIN
0V
5V
IN
0V
CRANKSHAFT POS
12V
0V
IN
0V
O2 SENSOR
5V
IN
0V
FUEL PRESSURE
5V
IN
0V
OIL PRESSURE
5V
IN
0V
TPS
IN
0V
HEAD TEMP
IN
0V
IAT