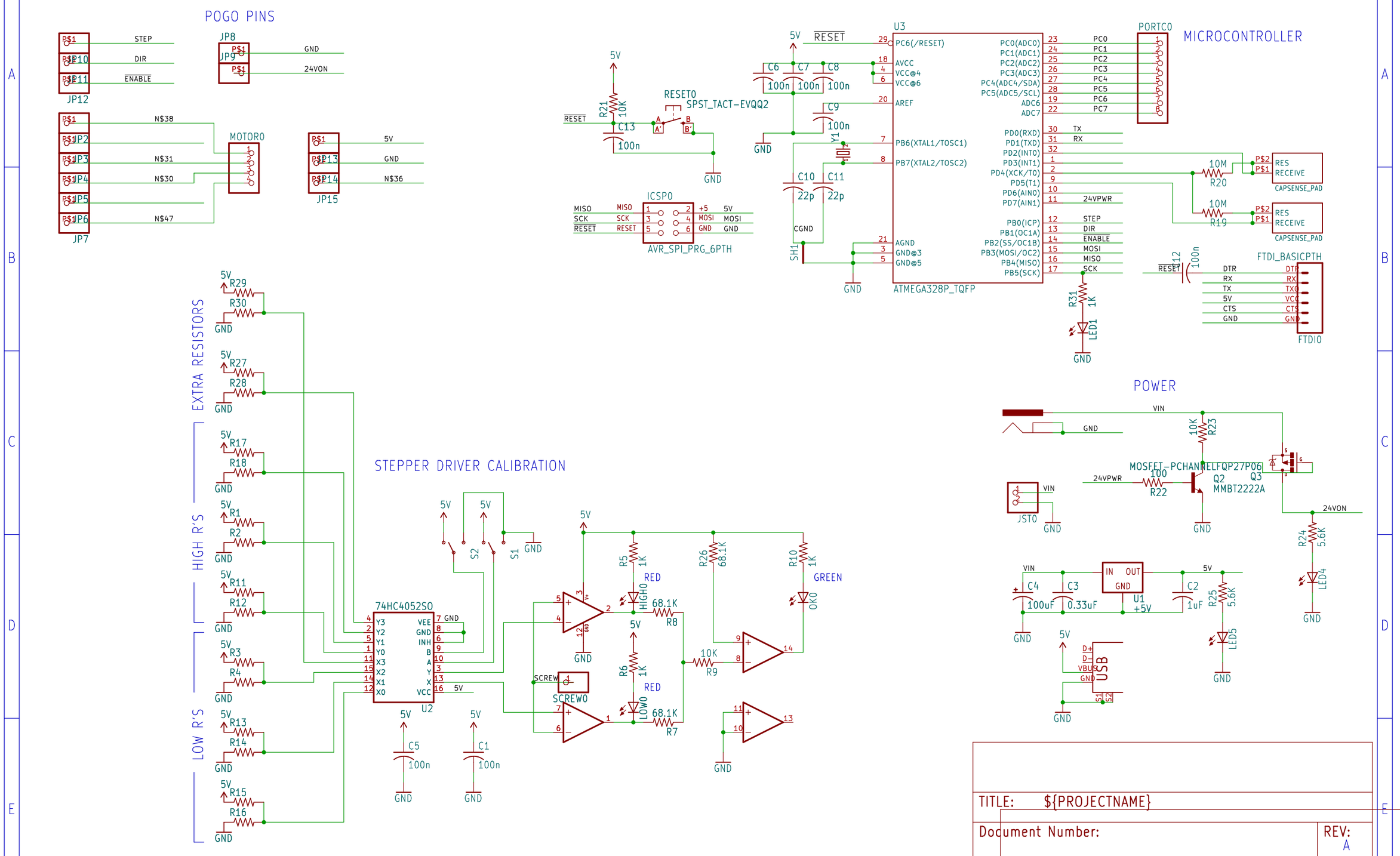
POGO PINS
JP12
STEP
DIR
ENABLE
JP8
GND
24VON
JP7
N$38
N$31
N$30
N$47
MOTOR0
JP15
5V
GND
N$36
RESET0
SPST_TACT-EVQQ2
ICSP0
AVR_SPI_PRG_6PTH
MISO
SCK
RESET
MOSI
U3
ATMEGA328P_TQFP
PC6(/RESET)
AVCC
VCC@4
VCC@6
AREF
PB6(XTAL1/TOSC1)
PB7(XTAL2/TOSC2)
AGND
GND@3
GND@5
PC0(ADC0)
PC1(ADC1)
PC2(ADC2)
PC3(ADC3)
PC4(ADC4/SDA)
PC5(ADC5/SCL)
ADC6
ADC7
PD0(RXD)
PD1(TXD)
PD2(INT0)
PD3(INT1)
PD4(XCK/T0)
PD5(T1)
PD6(AIN0)
PD7(AIN1)
PB0(ICP)
PB1(OC1A)
PB2(SS/OC1B)
PB3(MOSI/OC2)
PB4(MISO)
PB5(SCK)
24VPWR
STEP
DIR
ENABLE
MOSI
MISO
SCK
PORTC0
MICROCONTROLLER
RES
RECEIVE
CAPSENSE_PAD
FTDI_BASICPTH
DTR
RX
TX
5V
CTS
GND
FTDI0
LED1
POWER
VIN
GND
JST0
MOSFET-PCHANNELFQP27P06
MMBT2222A
24VON
U1
+5V
USB
STEPPER DRIVER CALIBRATION
EXTRA RESISTORS
HIGH R'S
LOW R'S
74HC4052SO
U2
SCREW
SCREW0
HIGH0
LOW0
RED
GREEN
OK0
LED4
LED5
TITLE: ${PROJECTNAME}
Document Number:
REV: A
Date: ${CURRENT_DATE}
Sheet: ${#}/${##}
Sheet: /
File: working.kicad_sch
Title:
Size: User
Date:
Rev:
KiCad E.D.A. eeschema 7.0.6
Id: 1/1