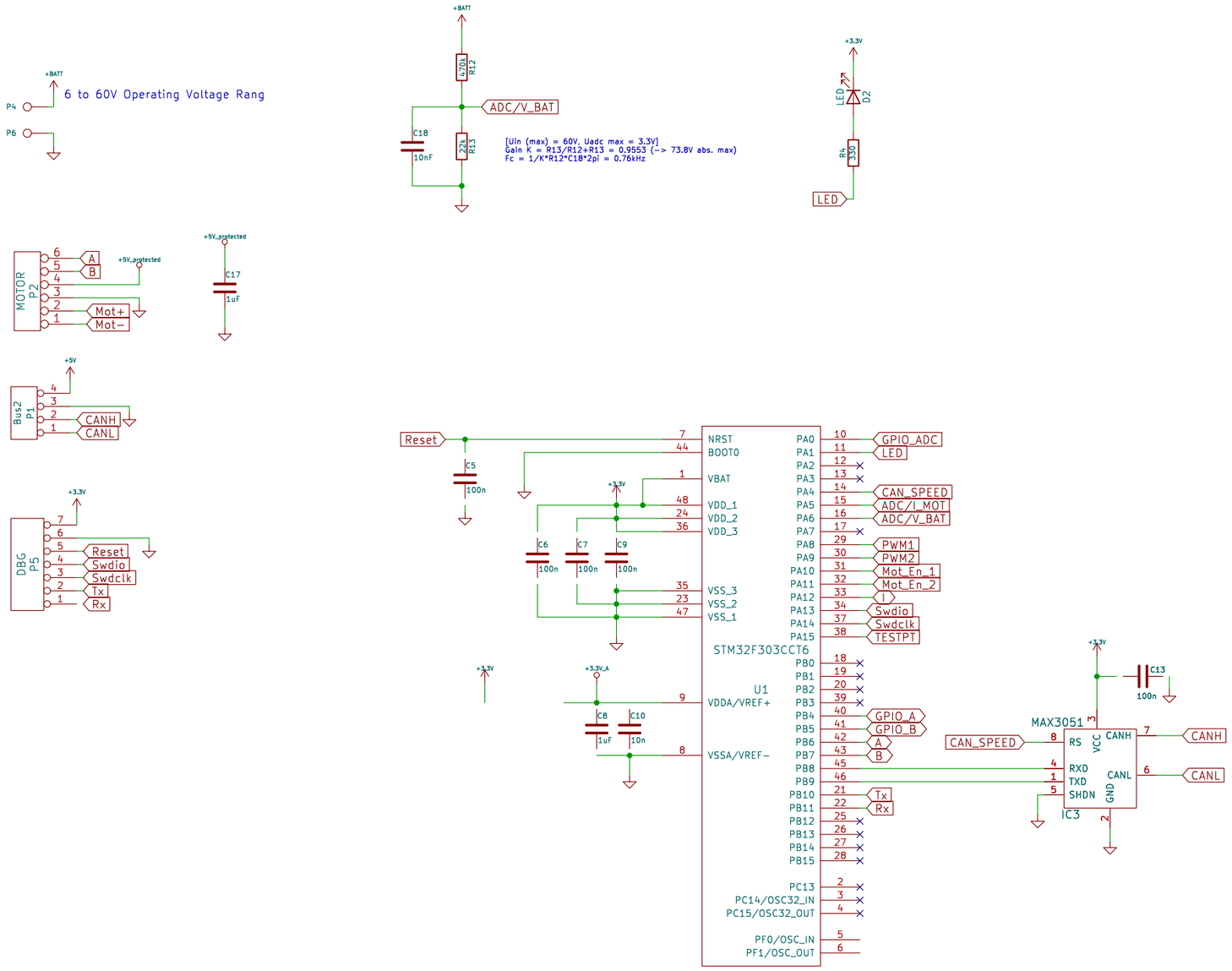

CVRA

CVRA

Sheet: /

File: _autosave-_autosave-_autosave-working_2.kicad_sch

Title: Motor control board

Size: A3	Date: 11 apr 2015	Rev: V00
KiCad E.D.A. eeschema 7.0.6		Id: 1/1