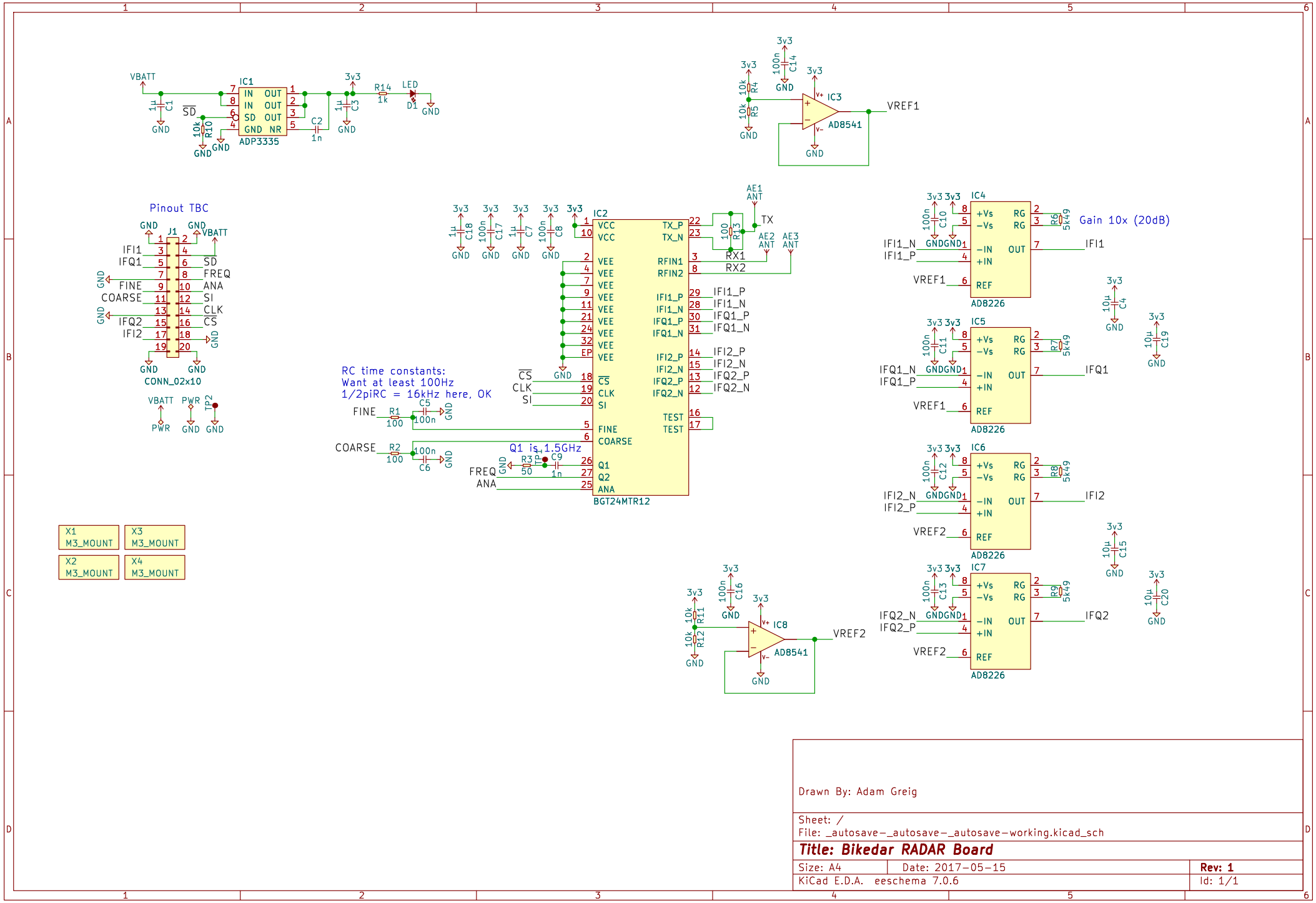

Drawn By: Adam Greig

Sheet: /
File: _autosave-_autosave-_autosave-working.kicad_sch

Title: Bikedar RADAR Board

Size: A4	Date: 2017-05-15	Rev: 1
KiCad E.D.A. eeschema 7.0.6		Id: 1/1