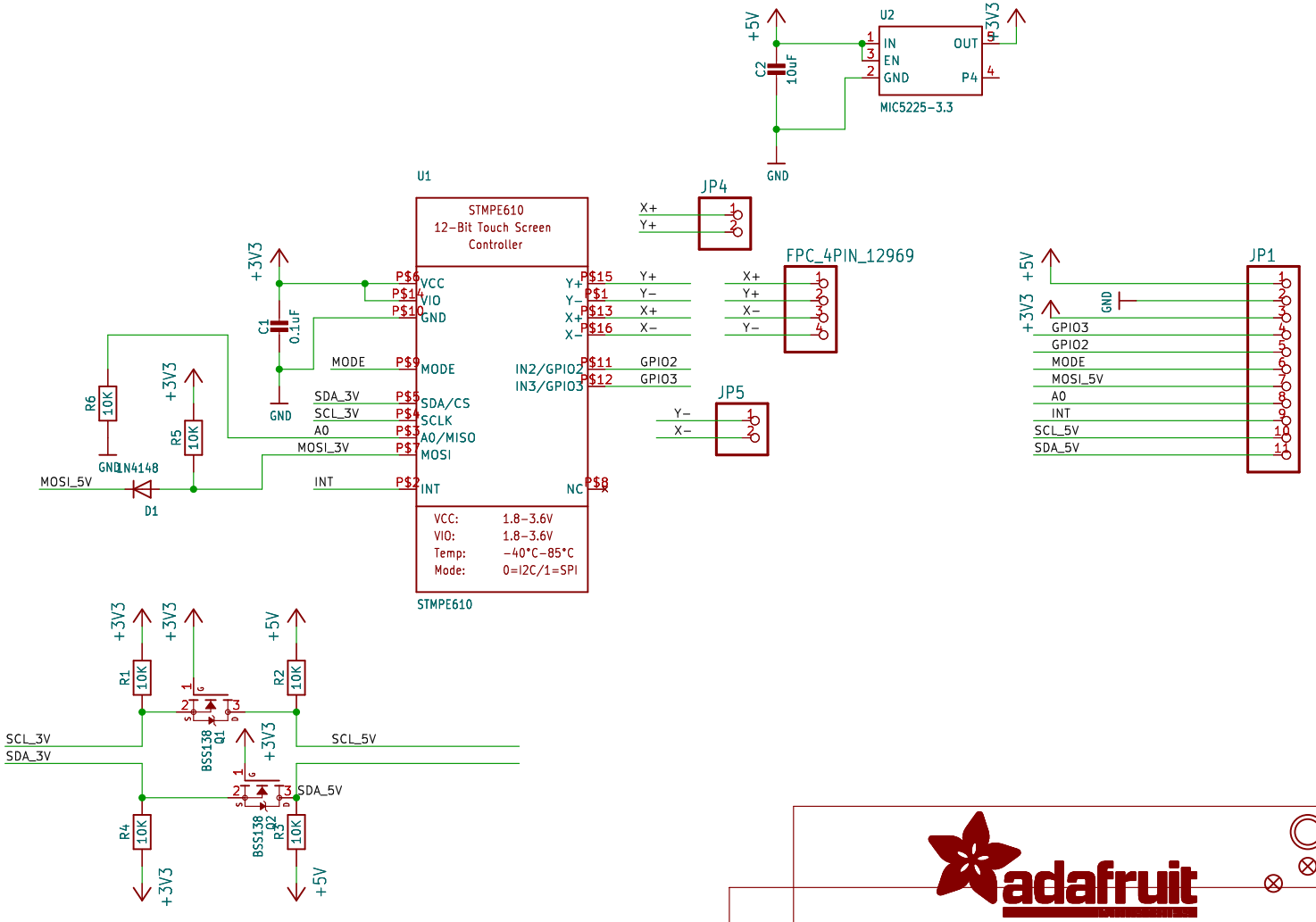

${PROJECTNAME}

${CURRENT_DATE} Sheet: ${#}/${##}

Drawing: ${AUTHOR} Adafruit Industries

Sheet: /
File: working.kicad_sch

Title:

Size: User Date: Rev:

KiCad E.D.A. eeschema 7.0.6 Id: 1/1