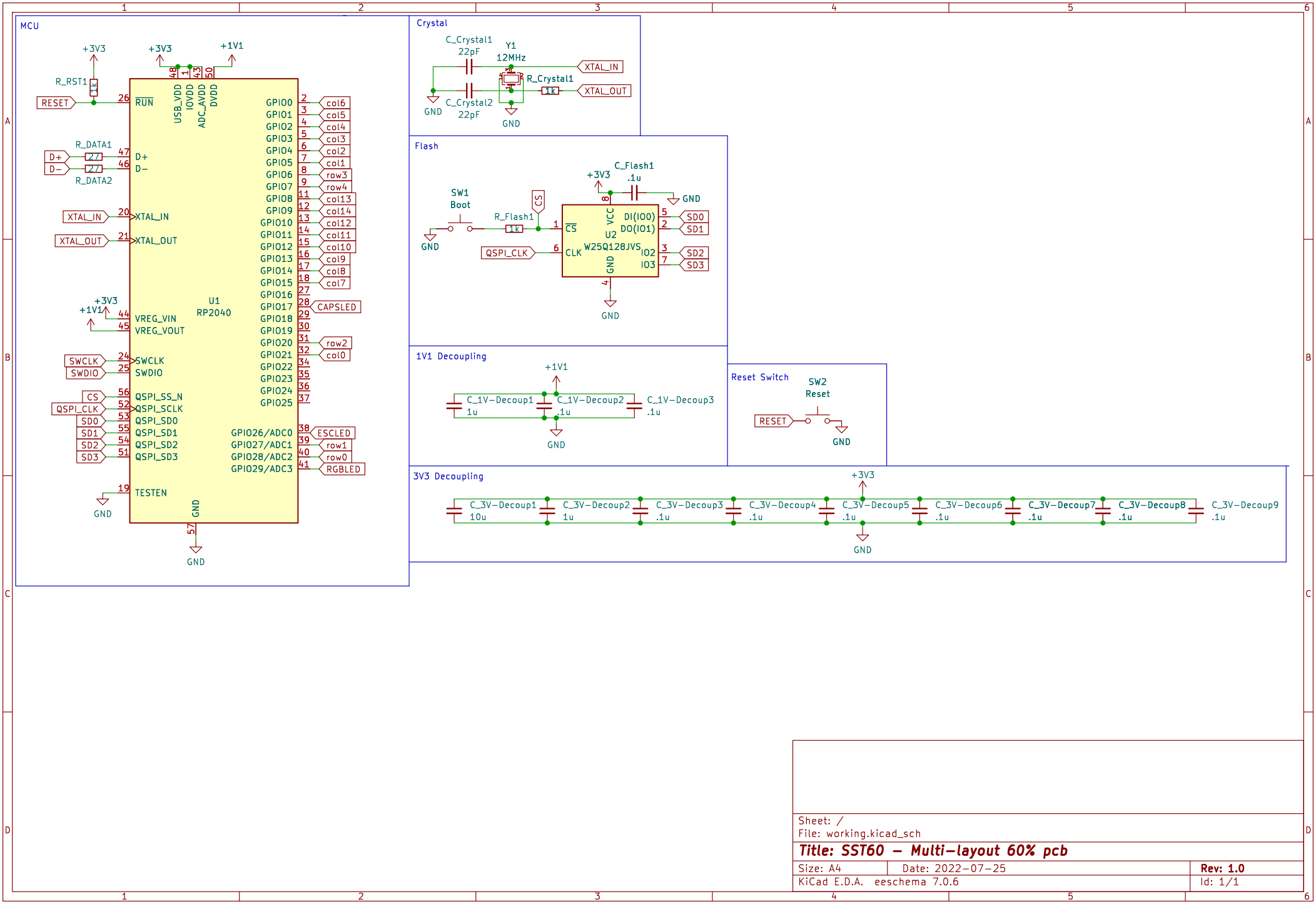

Sheet: /
File: working.kicad_sch

Title: SST60 – Multi-layout 60% pcb

Size: A4	Date: 2022-07-25	Rev: 1.0
KiCad E.D.A. eeschema 7.0.6		Id: 1/1