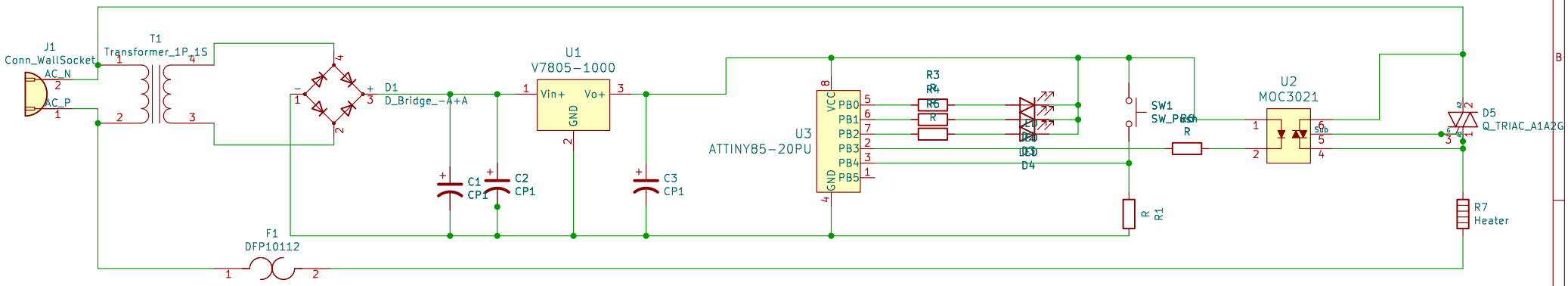

based on (to be completed)

Luis Dinis – altLab

Sheet: /
File: working.kicad_sch

Title: Heater Controller

Size: A4	Date: 2021-07-24	**Rev: Rev 0.5.0**
KiCad E.D.A. eeschema 7.0.6		Id: 1/1