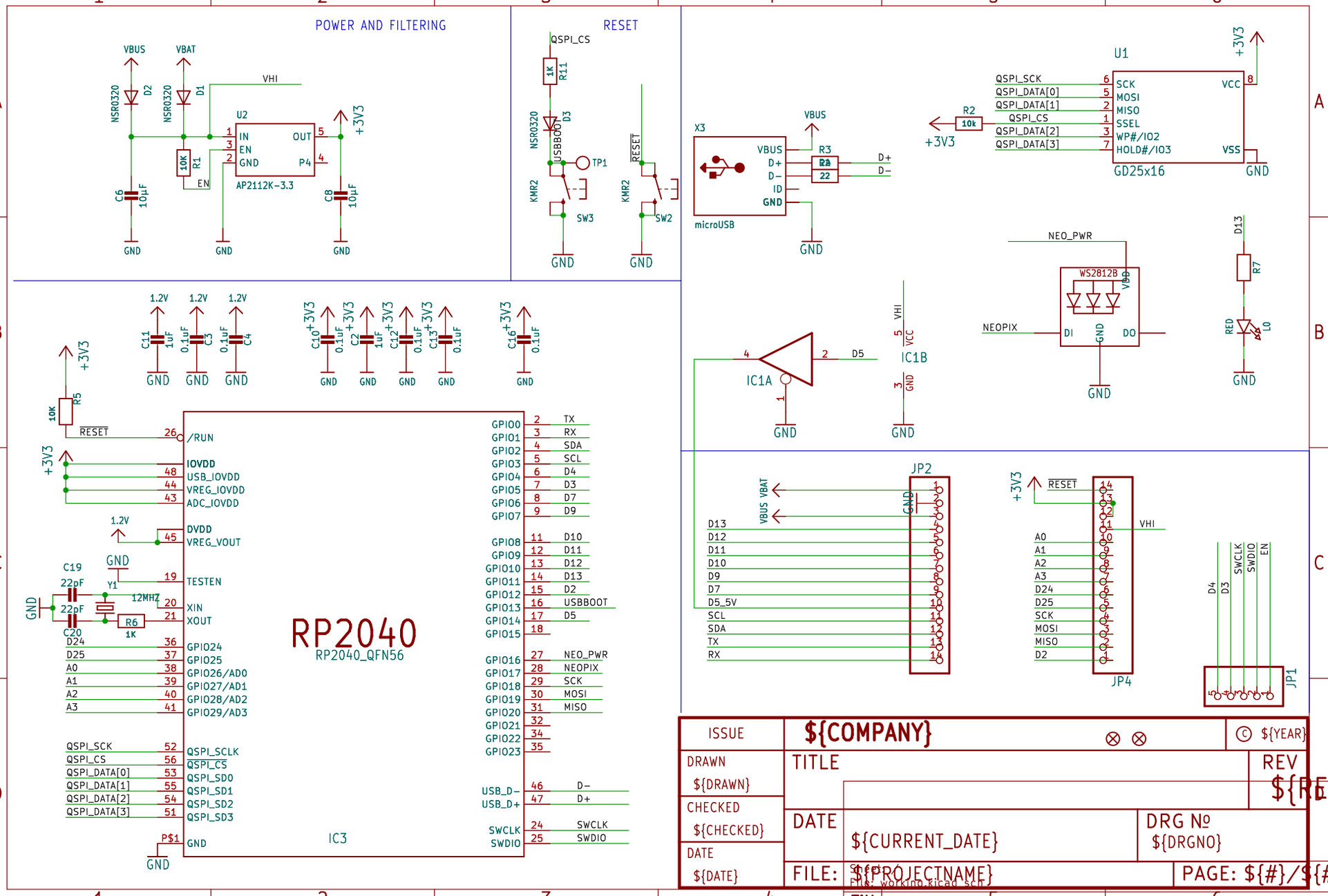
POWER AND FILTERING
VBUS
VBAT
NSR0320
D2
D1
VHI
U2
IN
EN
GND
OUT
P4
AP2112K-3.3
10K
R1
EN
C6
10µF
C8
10µF
+3V3
GND
RESET
QSPI_CS
1K
R11
D3
USBBOOT
TP1
KMR2
SW3
SW2
X3
microUSB
VBUS
D+
D-
ID
GND
R3
22
U1
GD25x16
SCK
MOSI
MISO
SSEL
WP#/IO2
HOLD#/IO3
VCC
VSS
QSPI_SCK
QSPI_DATA[0]
QSPI_DATA[1]
QSPI_CS
QSPI_DATA[2]
QSPI_DATA[3]
R2
10k
NEO_PWR
WS2812B
VDD
DI
DO
NEOPIX
D13
R7
RED
L0
IC1A
IC1B
D5
VCC
JP2
JP4
JP1
D13
D12
D11
D10
D9
D7
D5_5V
SCL
SDA
TX
RX
A0
A1
A2
A3
D24
D25
SCK
MOSI
MISO
D2
D4
D3
SWCLK
SWDIO
EN
1.2V
C11
1uF
C3
0.1uF
C4
C10
C2
C12
C13
C16
R5
10K
/RUN
IOVDD
USB_IOVDD
VREG_IOVDD
ADC_IOVDD
DVDD
VREG_VOUT
TESTEN
XIN
XOUT
C19
22pF
C20
22pF
Y1
12MHZ
R6
1K
GPIO24
GPIO25
GPIO26/AD0
GPIO27/AD1
GPIO28/AD2
GPIO29/AD3
QSPI_SCLK
QSPI_CS
QSPI_SD0
QSPI_SD1
QSPI_SD2
QSPI_SD3
P$1
RP2040
RP2040_QFN56
IC3
GPIO0
GPIO1
GPIO2
GPIO3
GPIO4
GPIO5
GPIO6
GPIO7
GPIO8
GPIO9
GPIO10
GPIO11
GPIO12
GPIO13
GPIO14
GPIO15
GPIO16
GPIO17
GPIO18
GPIO19
GPIO20
GPIO21
GPIO22
GPIO23
USB_D-
USB_D+
SWCLK
SWDIO
TX
RX
SDA
SCL
D4
D5
D7
D9
D10
D11
D12
D13
D2
USBBOOT
NEO_PWR
NEOPIX
SCK
MOSI
MISO
D-
D+
ISSUE
${COMPANY}
© ${YEAR}
DRAWN
${DRAWN}
TITLE
REV
${REV}
CHECKED
${CHECKED}
DATE
${DATE}
DATE
${CURRENT_DATE}
DRG № ${DRGNO}
FILE: ${PROJECTNAME}
PAGE: ${#}/${##}
Title:
Size: User
Date:
Rev:
KiCad E.D.A. eeschema 7.0.6
Id: 1/1