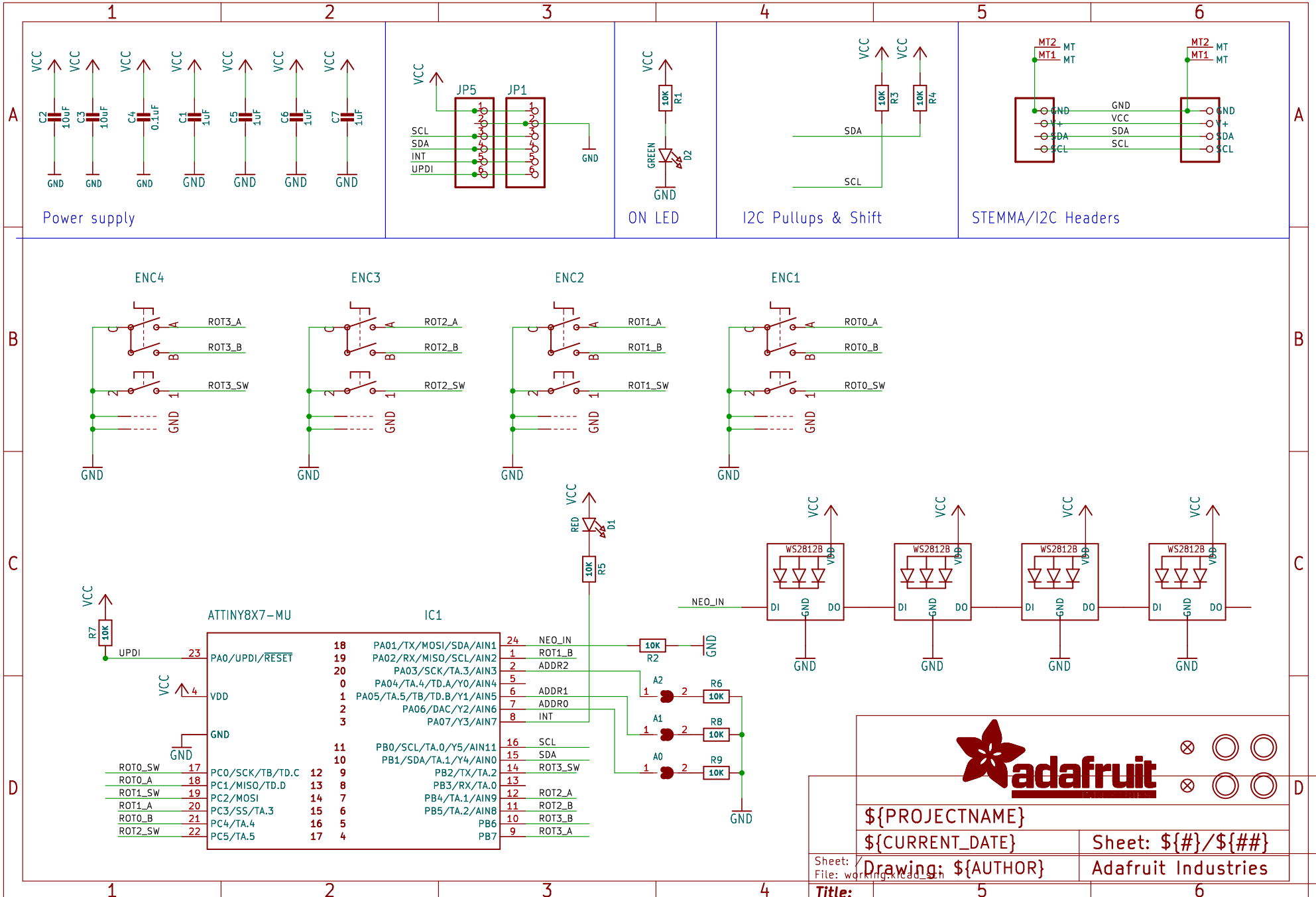
Power supply
C2 10uF
C3 10uF
C4 0.1uF
C1 1uF
C5 1uF
C6 1uF
C7 1uF
VCC
GND
JP5
JP1
SCL
SDA
INT
UPDI
ON LED
R1 10K
GREEN
D2
I2C Pullups & Shift
R3 10K
R4 10K
STEMMA/I2C Headers
MT2
MT1
MT
GND
VCC
SDA
SCL
V+
ENC4
ENC3
ENC2
ENC1
ROT3_A
ROT3_B
ROT3_SW
ROT2_A
ROT2_B
ROT2_SW
ROT1_A
ROT1_B
ROT1_SW
ROT0_A
ROT0_B
ROT0_SW
RED
D1
R5 10K
R7 10K
ATTINY8X7-MU
IC1
PA0/UPDI/RESET
VDD
PA01/TX/MOSI/SDA/AIN1
PA02/RX/MISO/SCL/AIN2
PA03/SCK/TA.3/AIN3
PA04/TA.4/TD.A/Y0/AIN4
PA05/TA.5/TB/TD.B/Y1/AIN5
PA06/DAC/Y2/AIN6
PA07/Y3/AIN7
PB0/SCL/TA.0/Y5/AIN11
PB1/SDA/TA.1/Y4/AIN0
PB2/TX/TA.2
PB3/RX/TA.0
PB4/TA.1/AIN9
PB5/TA.2/AIN8
PB6
PB7
PC0/SCK/TB/TD.C
PC1/MISO/TD.D
PC2/MOSI
PC3/SS/TA.3
PC4/TA.4
PC5/TA.5
NEO_IN
ADDR2
ADDR1
ADDR0
R2 10K
A2
A1
A0
R6 10K
R8 10K
R9 10K
WS2812B
DI
DO
adafruit
${PROJECTNAME}
${CURRENT_DATE}
Sheet: ${#}/${##}
Drawing: ${AUTHOR}
Adafruit Industries
Sheet: /
File: working.kicad_sch
Title:
Size: User
Date:
Rev:
KiCad E.D.A. eeschema 7.0.6
Id: 1/1