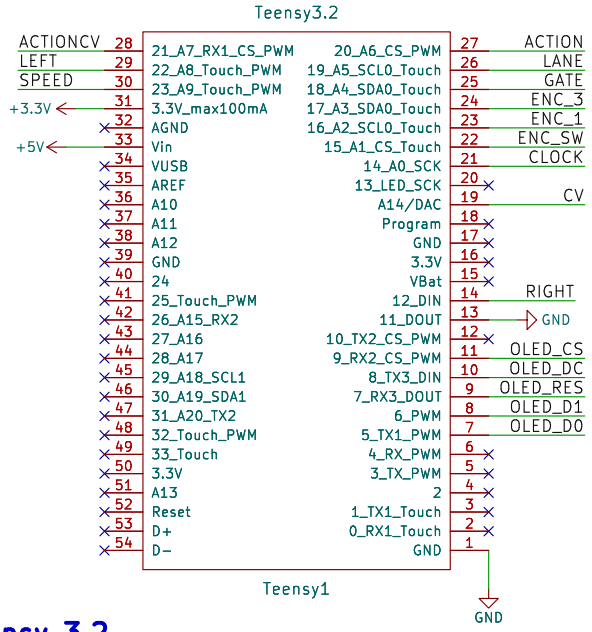

Teensy 3.2

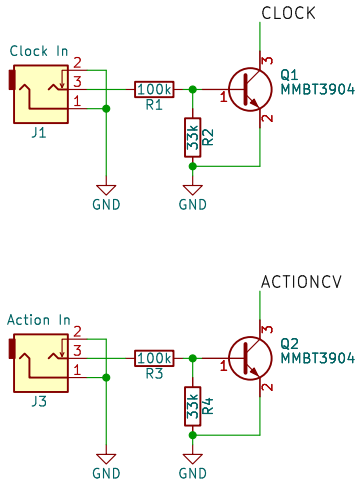

Input Protection

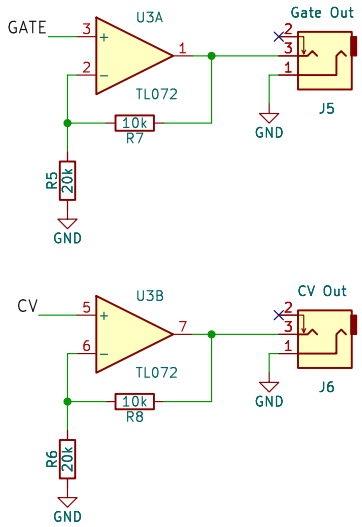

Output

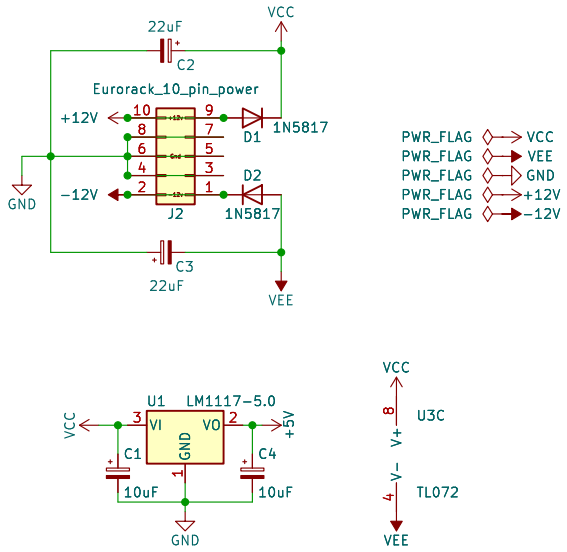

Power

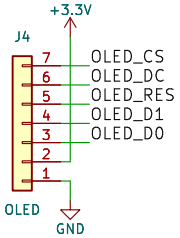

OLED Connector

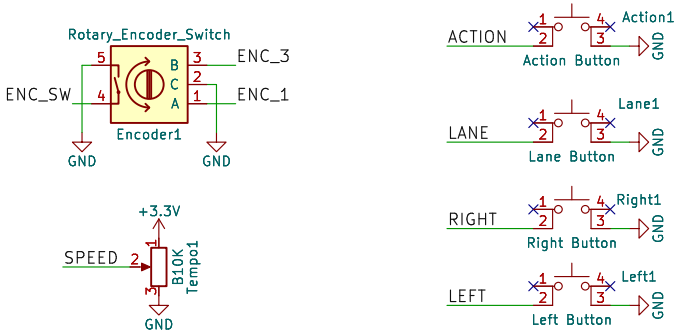

Controls

Mountjoy Modular

Sheet: /

File: _autosave-working.kicad_sch

Title: Play Dice

Size: A4	Date:	**Rev:**
KiCad E.D.A. eeschema 7.0.6		Id: 1/1