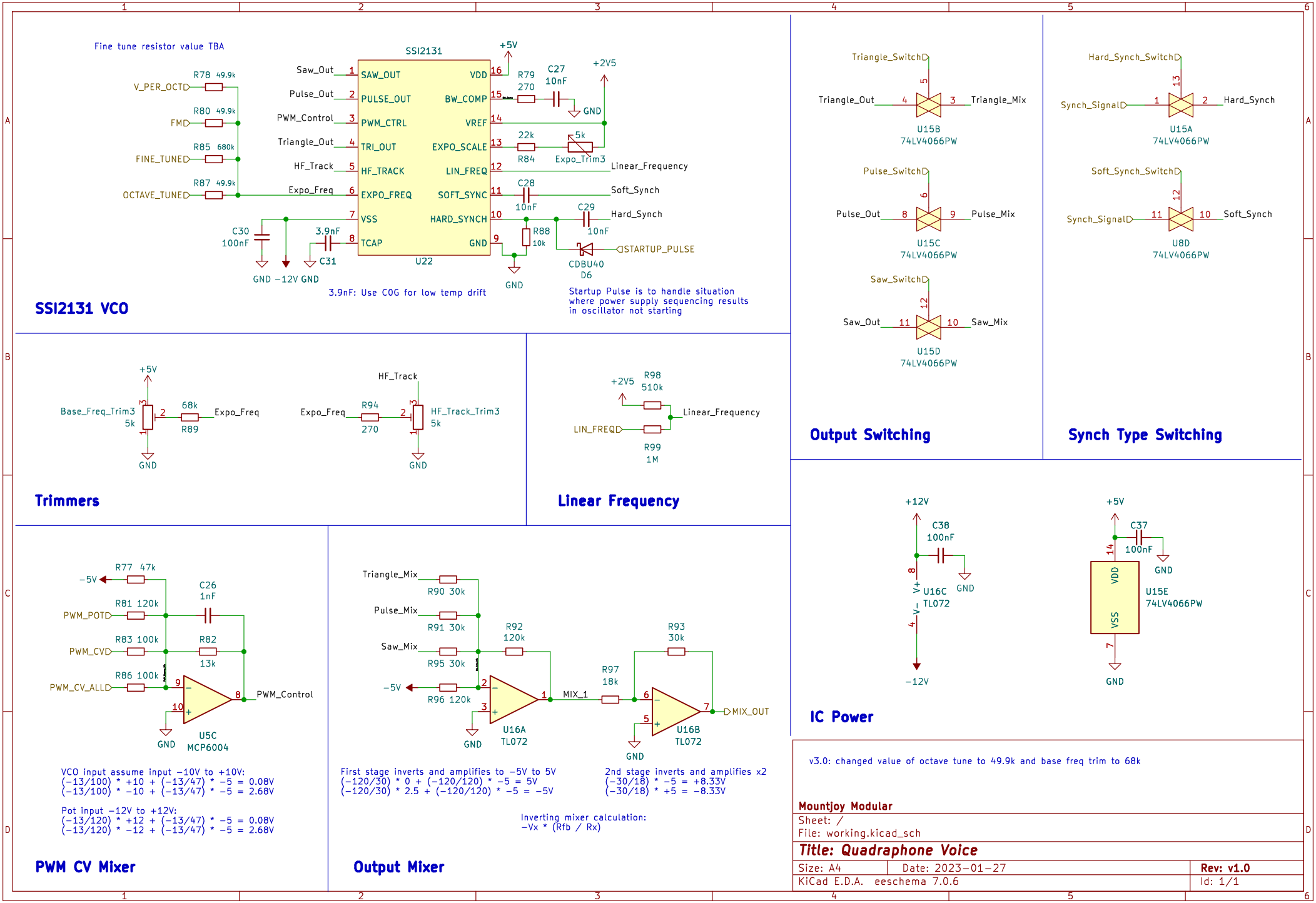
Fine tune resistor value TBA
SSI2131
+5V
+2V5
V_PER_OCT
R78 49.9k
FM
R80 49.9k
FINE_TUNE
R85 680k
OCTAVE_TUNE
R87 49.9k
Saw_Out
Pulse_Out
PWM_Control
Triangle_Out
HF_Track
Expo_Freq
SAW_OUT
PULSE_OUT
PWM_CTRL
TRI_OUT
HF_TRACK
EXPO_FREQ
VSS
TCAP
VDD
BW_COMP
VREF
EXPO_SCALE
LIN_FREQ
SOFT_SYNC
HARD_SYNCH
GND
U22
R79 270
C27 10nF
GND
22k
R84
5k
Expo_Trim3
Linear_Frequency
C28 10nF
Soft_Synch
C29 10nF
Hard_Synch
R88 10k
STARTUP_PULSE
CDBU40
D6
C30 100nF
3.9nF
C31
GND −12V GND
3.9nF: Use C0G for low temp drift
Startup Pulse is to handle situation where power supply sequencing results in oscillator not starting
SSI2131 VCO
Triangle_Switch
Triangle_Out
Triangle_Mix
U15B
74LV4066PW
Pulse_Switch
Pulse_Out
Pulse_Mix
U15C
74LV4066PW
Saw_Switch
Saw_Out
Saw_Mix
U15D
74LV4066PW
Output Switching
Hard_Synch_Switch
Synch_Signal
Hard_Synch
U15A
74LV4066PW
Soft_Synch_Switch
Soft_Synch
U8D
74LV4066PW
Synch Type Switching
Base_Freq_Trim3
5k
68k
R89
Expo_Freq
HF_Track
R94
270
HF_Track_Trim3
5k
Trimmers
+2V5
R98
510k
LIN_FREQ
R99
1M
Linear_Frequency
Linear Frequency
+12V
C38
100nF
U16C
TL072
−12V
+5V
C37
100nF
U15E
74LV4066PW
VDD
VSS
R77 47k
−5V
C26
1nF
R81 120k
PWM_POT
R83 100k
PWM_CV
R82
13k
R86 100k
PWM_CV_ALL
PWM_Control
U5C
MCP6004
VCO input assume input −10V to +10V:
(−13/100) * +10 + (−13/47) * −5 = 0.08V
(−13/100) * −10 + (−13/47) * −5 = 2.68V
Pot input −12V to +12V:
(−13/120) * +12 + (−13/47) * −5 = 0.08V
(−13/120) * −12 + (−13/47) * −5 = 2.68V
PWM CV Mixer
Triangle_Mix
R90 30k
Pulse_Mix
R91 30k
Saw_Mix
R95 30k
−5V
R96 120k
R92
120k
U16A
TL072
MIX_1
R97
18k
R93
30k
U16B
TL072
MIX_OUT
First stage inverts and amplifies to −5V to 5V
(−120/30) * 0 + (−120/120) * −5 = 5V
(−120/30) * 2.5 + (−120/120) * −5 = −5V
2nd stage inverts and amplifies x2
(−30/18) * −5 = +8.33V
(−30/18) * +5 = −8.33V
Inverting mixer calculation:
−Vx * (Rfb / Rx)
Output Mixer
IC Power
v3.0: changed value of octave tune to 49.9k and base freq trim to 68k
Mountjoy Modular
Sheet: /
File: working.kicad_sch
Title: Quadraphone Voice
Size: A4
Date: 2023-01-27
Rev: v1.0
KiCad E.D.A. eeschema 7.0.6
Id: 1/1