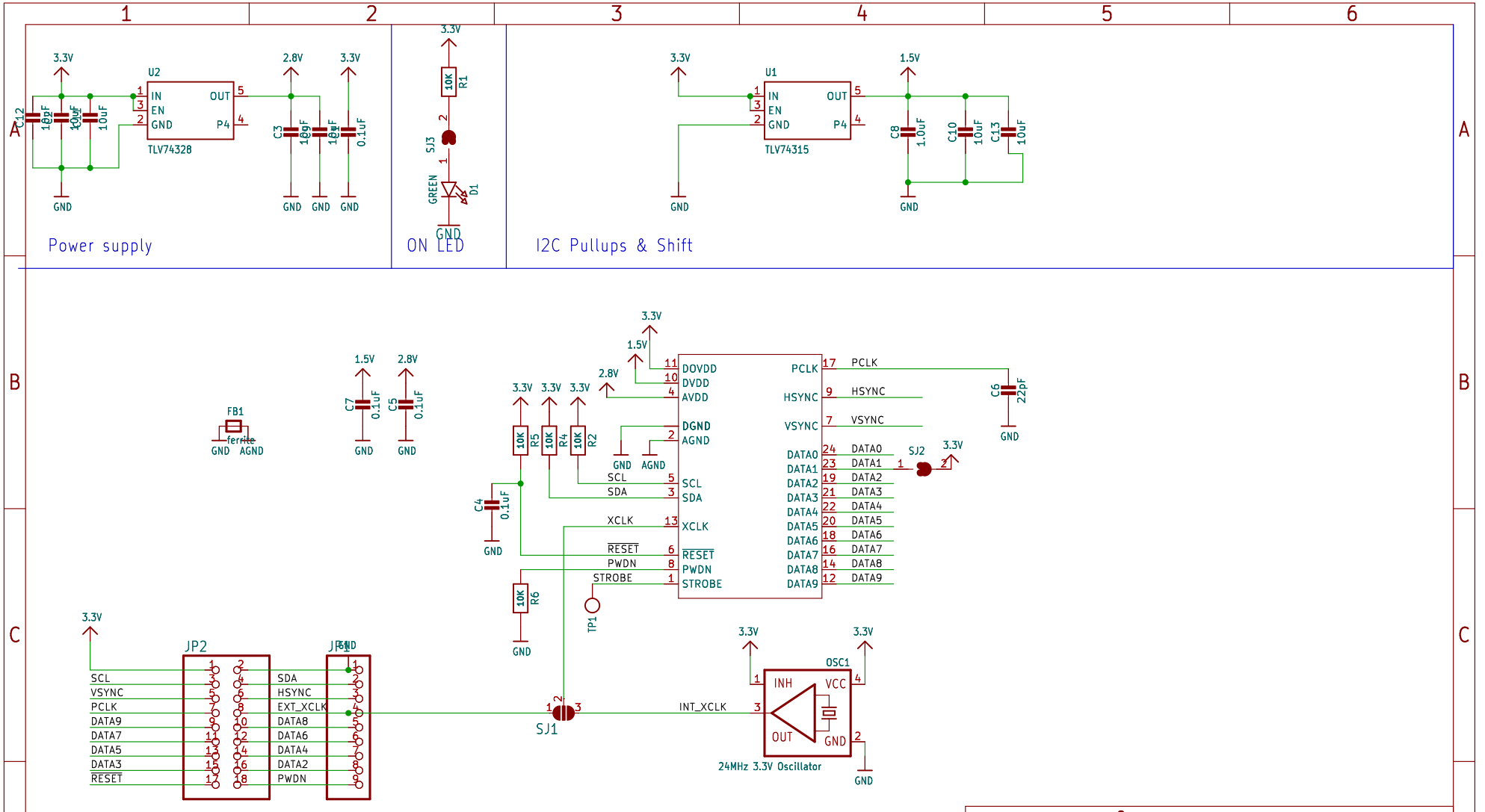
Power supply
U2
TLV74328
IN
EN
GND
OUT
P4
3.3V
2.8V
C12
10uF
C3
10uF
0.1uF
GND
ON LED
R1
10K
SJ3
GREEN
D1
I2C Pullups & Shift
U1
TLV74315
1.5V
C8
1.0uF
C10
10uF
C13
10uF
FB1
ferrite
AGND
C7
0.1uF
C5
0.1uF
DOVDD
DVDD
AVDD
DGND
AGND
SCL
SDA
XCLK
RESET
PWDN
STROBE
PCLK
HSYNC
VSYNC
DATA0
DATA1
DATA2
DATA3
DATA4
DATA5
DATA6
DATA7
DATA8
DATA9
R5
R4
R2
C4
0.1uF
R6
TP1
C6
22pF
SJ2
JP2
JP1
EXT_XCLK
SJ1
INT_XCLK
OSC1
INH
VCC
OUT
24MHz 3.3V Oscillator
adafruit
${PROJECTNAME}
${CURRENT_DATE}
Sheet: ${#}/${##}
Drawing: ${AUTHOR}
Adafruit Industries
Sheet: /
File: working.kicad_sch
Title:
Size: User
Date:
Rev:
KiCad E.D.A. eeschema 7.0.6
Id: 1/1