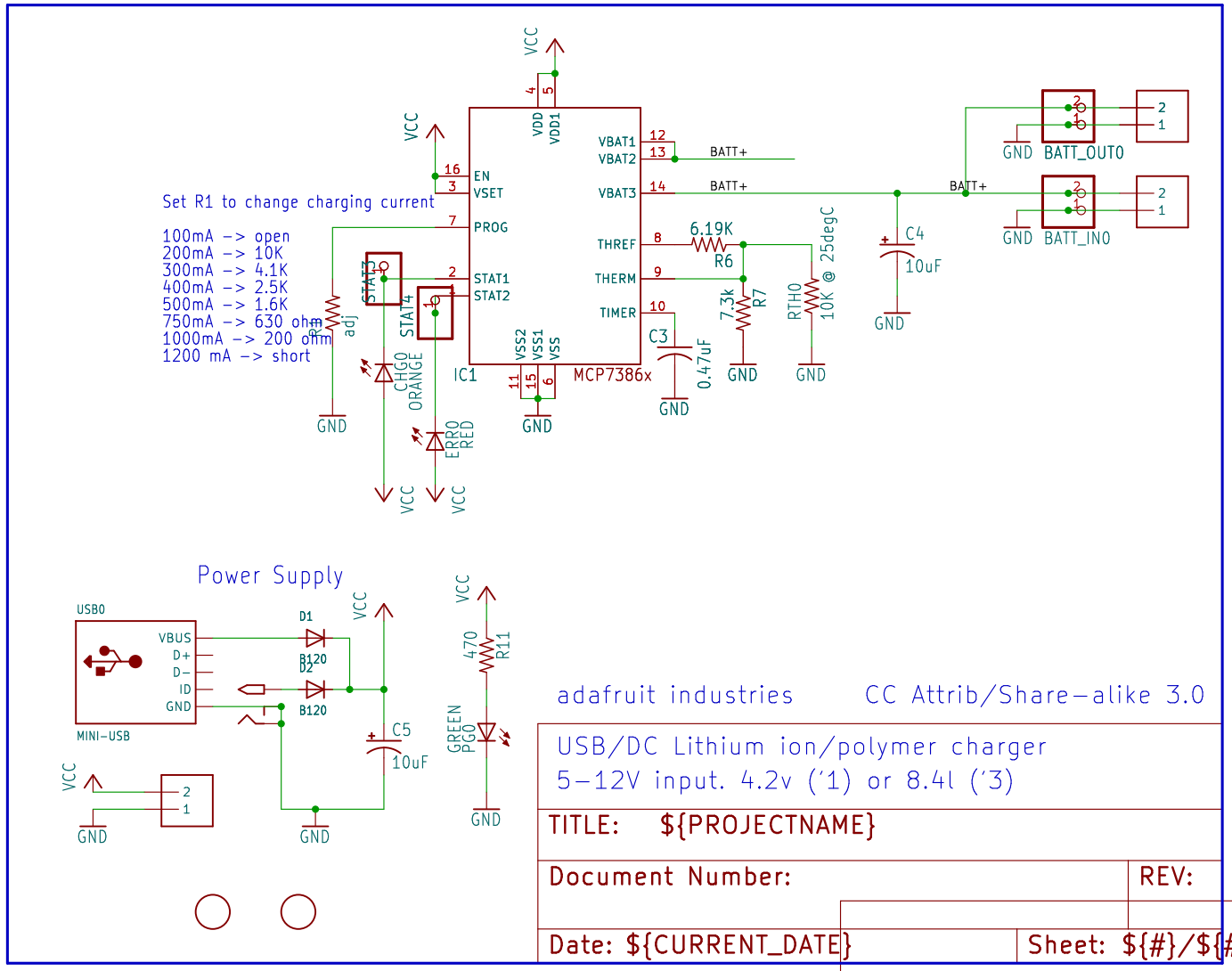

adafruit industries CC Attrib/Share-alike 3.0

USB/DC Lithium ion/polymer charger
5-12V input. 4.2v ('1) or 8.4l ('3)

TITLE: ${PROJECTNAME}

Document Number: REV:

Date: ${CURRENT_DATE} Sheet: ${#}/${##}

Sheet: /
File: _autosave-working.kicad_sch

Title:

Size: A4 Date: **Rev:**
KiCad E.D.A. eeschema 7.0.6 Id: 1/1