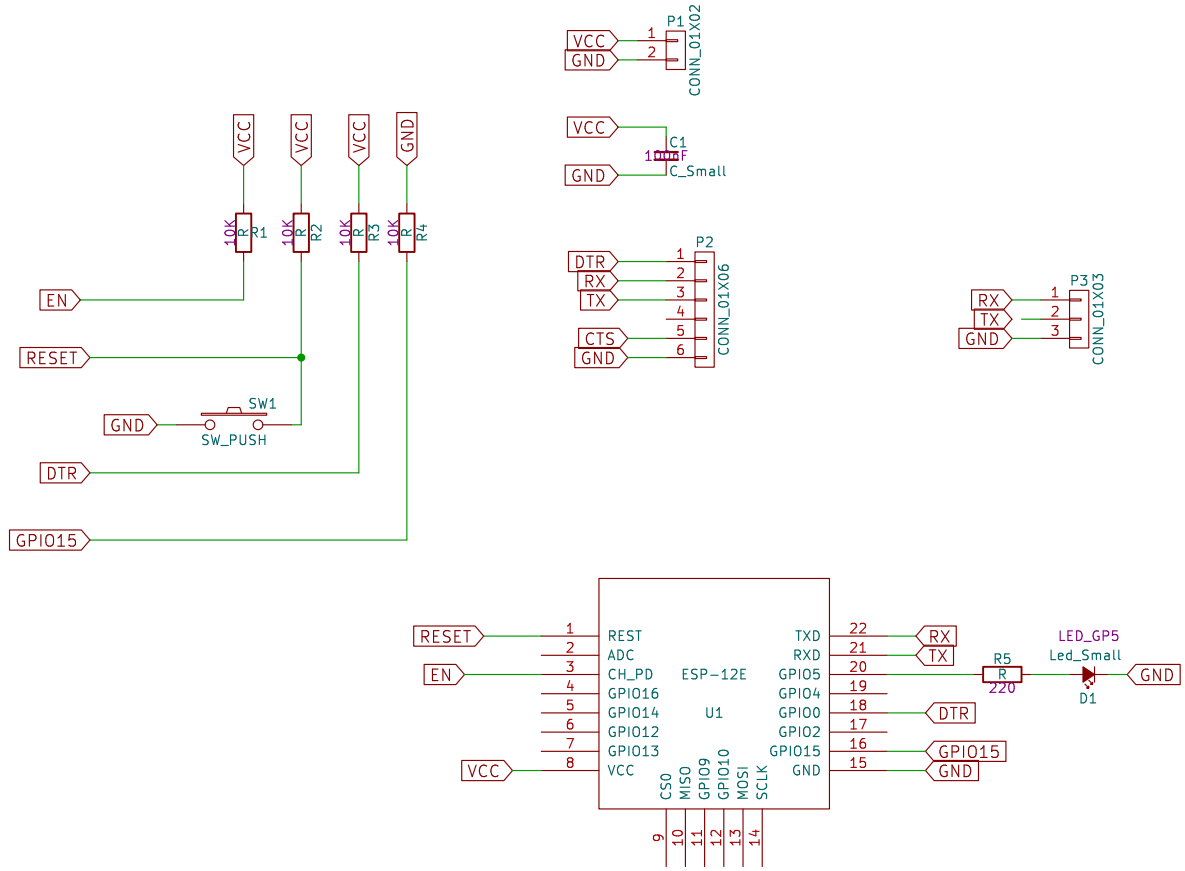

Sheet: /
File: _autosave-working.kicad_sch

Title:

Size: A4	Date:	Rev:
KiCad E.D.A. eeschema 7.0.6		Id: 1/1