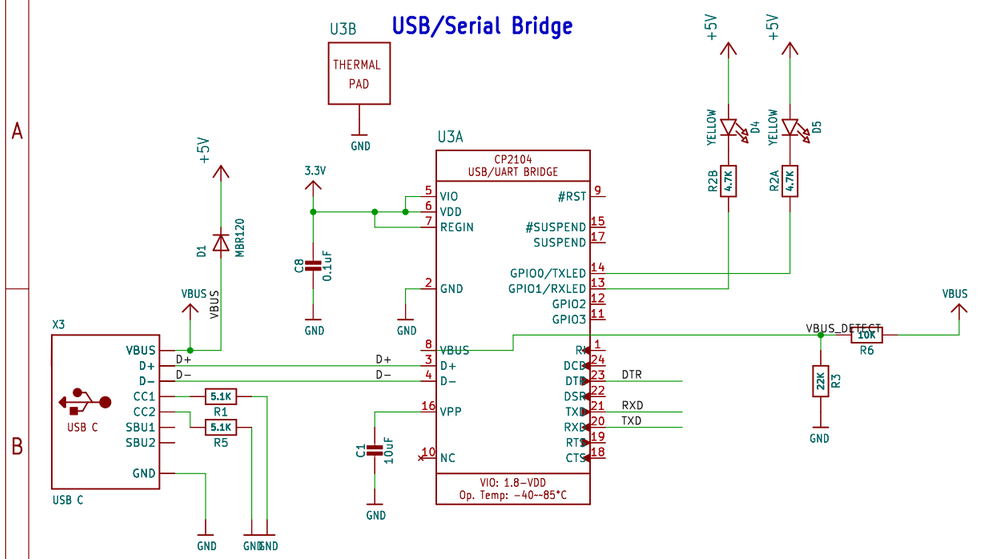

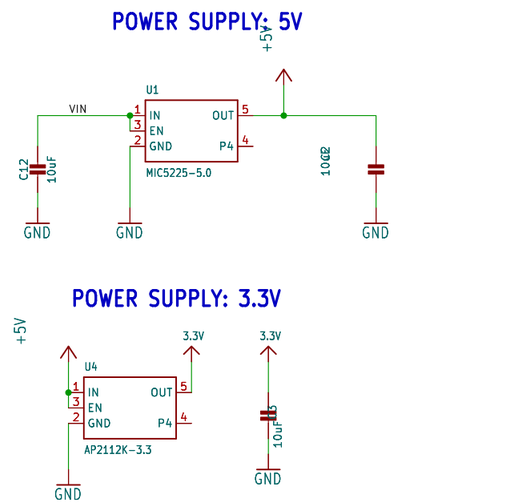

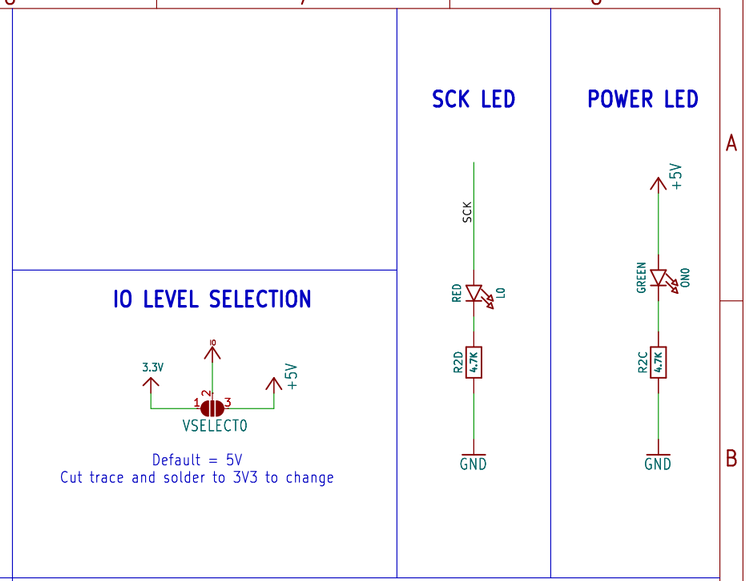

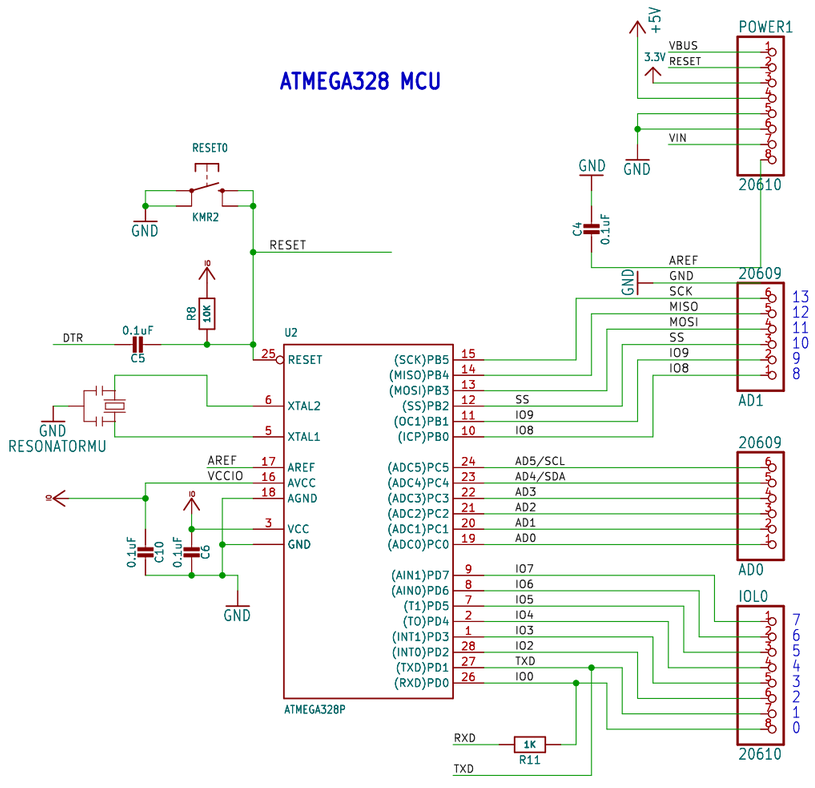

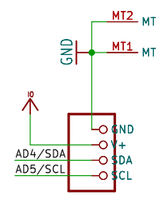

Lots of room for BLAH BLAH BLAH notes

Author:	Limor Fried & KTOWN
	${PROJECTNAME}
	${CURRENT_DATE}
Sheet: /	Sheet: ${#}/${##}
File: working.kicad_sch	
Title:	
Size: User	Date:
KiCad E.D.A. eeschema 7.0.6	Rev:
	Id: 1/1