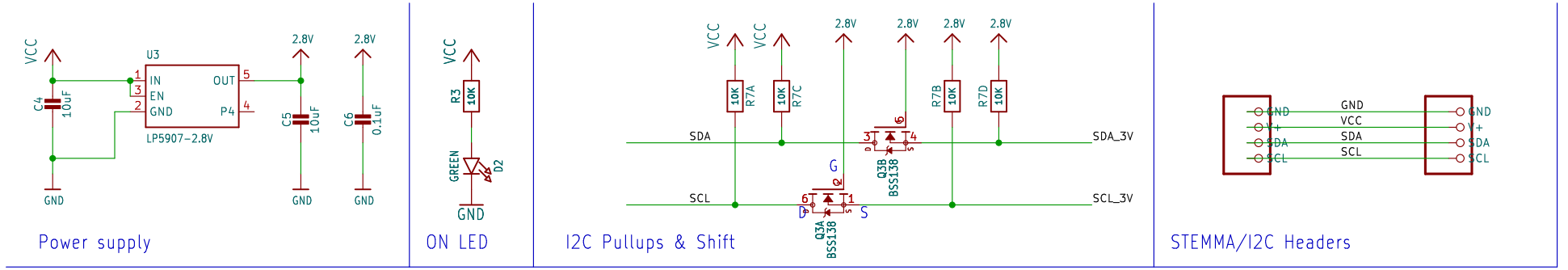

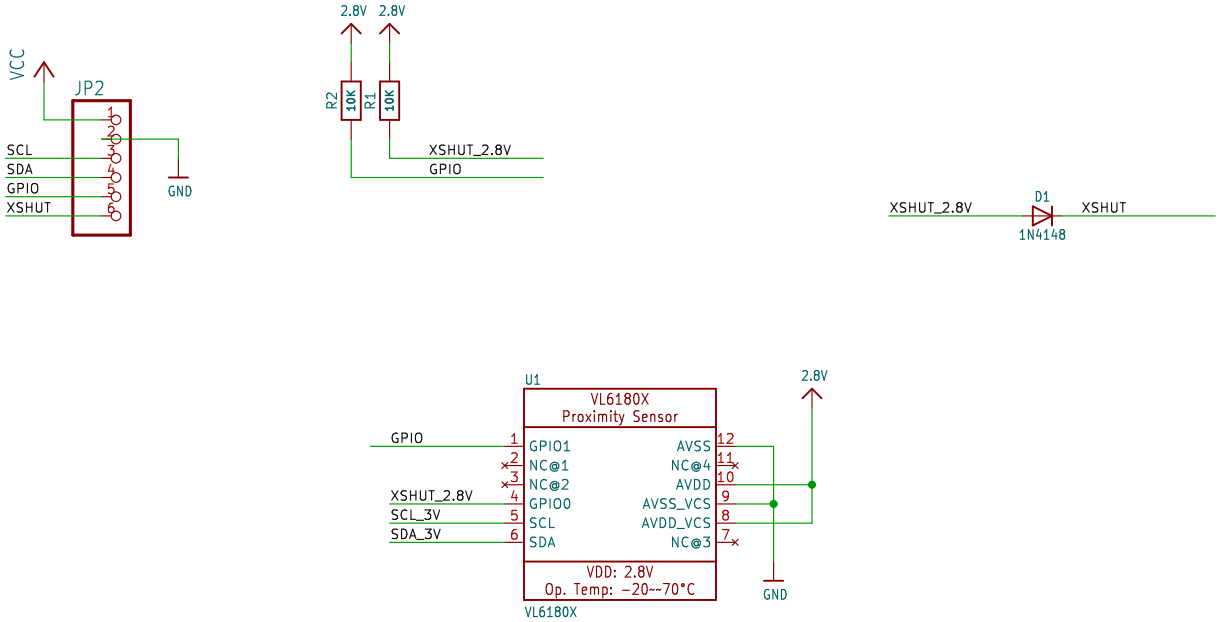

Sheet: /
File: _autosave-working.kicad_sch

Title:

Size: User	Date:	Rev:
KiCad E.D.A. eeschema 7.0.6	Id: 1/1	

Drawing: ${AUTHOR}	Adafruit Industries
${CURRENT_DATE}	Sheet: ${#}/${##}
${PROJECTNAME}	