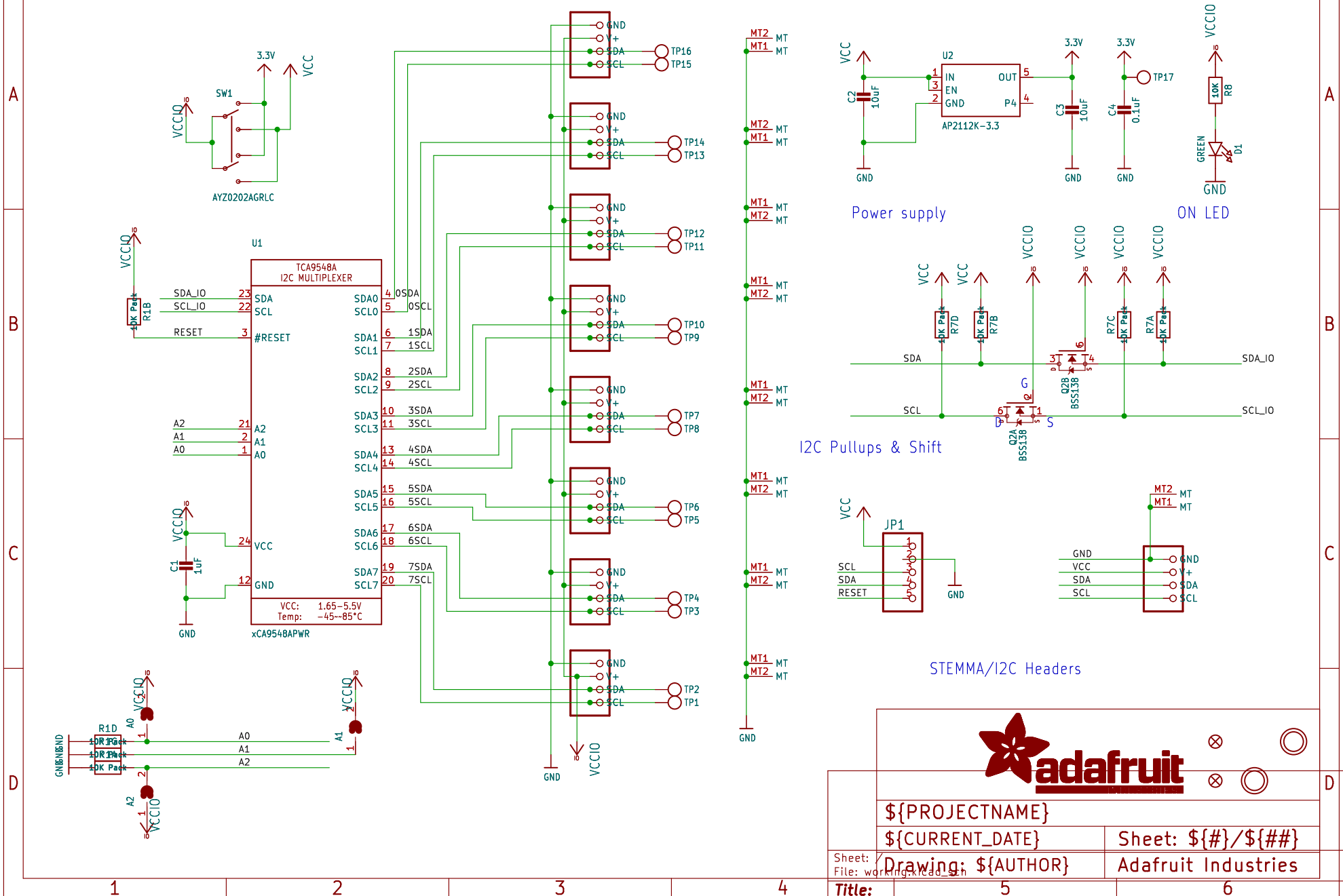
U1
TCA9548A
I2C MULTIPLEXER
VCC: 1.65-5.5V
Temp: -45--85°C
xCA9548APWR
SW1
AYZ0202AGRLC
U2
AP2112K-3.3
Power supply
ON LED
I2C Pullups & Shift
STEMMA/I2C Headers
JP1
R1B
R1D
R7D
R7B
R7C
R7A
R8
D1
Q2A
BSS138
Q2B
BSS138
C1
C2
C3
C4
TP1
TP2
TP3
TP4
TP5
TP6
TP7
TP8
TP9
TP10
TP11
TP12
TP13
TP14
TP15
TP16
TP17
adafruit
${PROJECTNAME}
${CURRENT_DATE}
Sheet: ${#}/${##}
Drawing: ${AUTHOR}
Adafruit Industries
Title:
Size: User
Date:
Rev:
KiCad E.D.A. eeschema 7.0.6
Id: 1/1