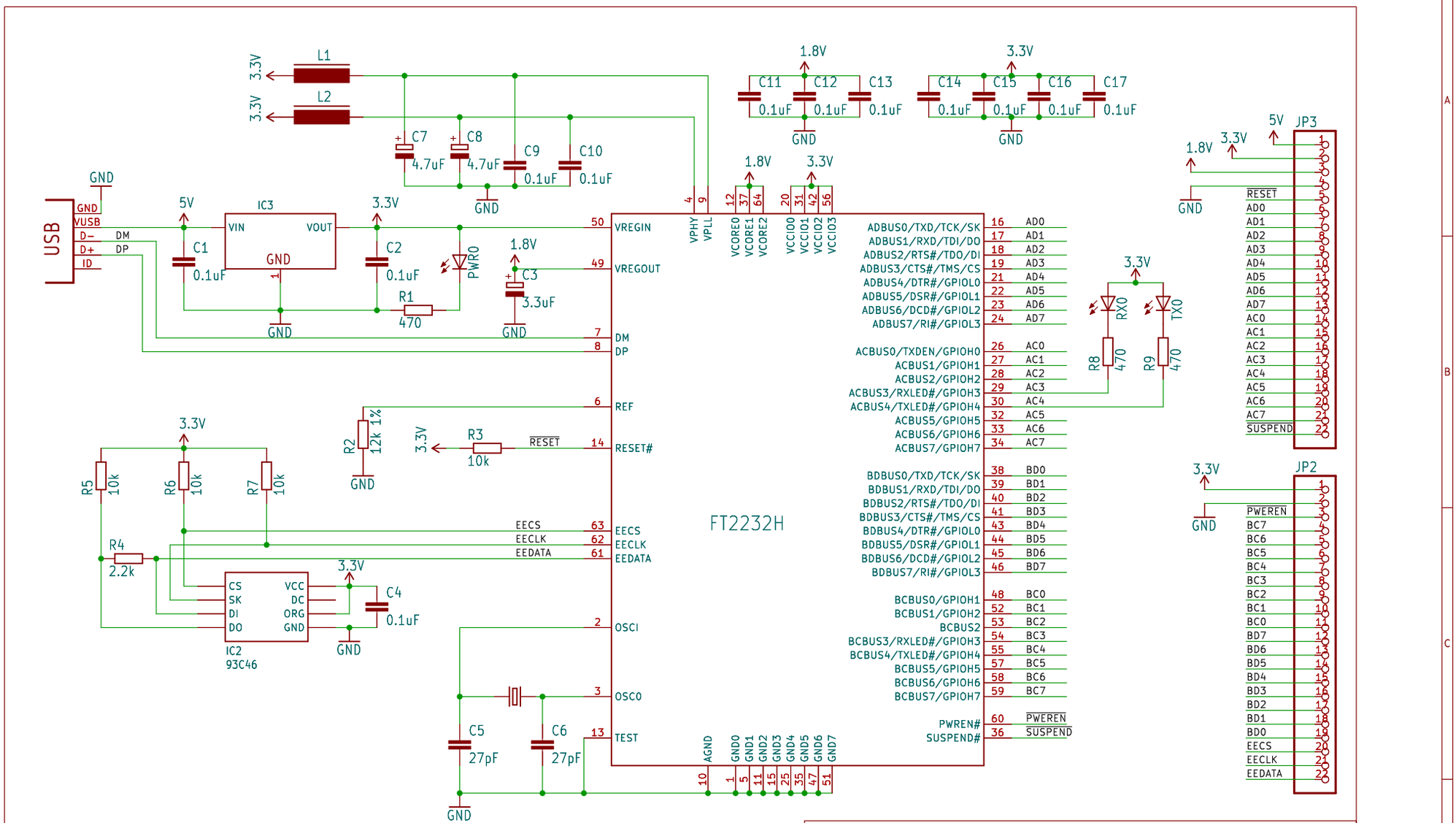
USB
GND
VUSB
D-
D+
ID
DM
DP
5V
IC3
VIN
VOUT
GND
C1
0.1uF
C2
0.1uF
3.3V
PWR0
R1
470
1.8V
C3
3.3uF
L1
L2
C7
4.7uF
C8
4.7uF
C9
0.1uF
C10
0.1uF
C11
C12
C13
C14
C15
C16
C17
VREGIN
VREGOUT
REF
RESET#
EECS
EECLK
EEDATA
OSCI
OSCO
TEST
VPHY
VPLL
VCORE0
VCORE1
VCORE2
VCCIO0
VCCIO1
VCCIO2
VCCIO3
AGND
GND0
GND1
GND2
GND3
GND4
GND5
GND6
GND7
FT2232H
ADBUS0/TXD/TCK/SK
ADBUS1/RXD/TDI/DO
ADBUS2/RTS#/TDO/DI
ADBUS3/CTS#/TMS/CS
ADBUS4/DTR#/GPIOL0
ADBUS5/DSR#/GPIOL1
ADBUS6/DCD#/GPIOL2
ADBUS7/RI#/GPIOL3
ACBUS0/TXDEN/GPIOH0
ACBUS1/GPIOH1
ACBUS2/GPIOH2
ACBUS3/RXLED#/GPIOH3
ACBUS4/TXLED#/GPIOH4
ACBUS5/GPIOH5
ACBUS6/GPIOH6
ACBUS7/GPIOH7
BDBUS0/TXD/TCK/SK
BDBUS1/RXD/TDI/DO
BDBUS2/RTS#/TDO/DI
BDBUS3/CTS#/TMS/CS
BDBUS4/DTR#/GPIOL0
BDBUS5/DSR#/GPIOL1
BDBUS6/DCD#/GPIOL2
BDBUS7/RI#/GPIOL3
BCBUS0/GPIOH1
BCBUS1/GPIOH2
BCBUS2
BCBUS3/RXLED#/GPIOH3
BCBUS4/TXLED#/GPIOH4
BCBUS5/GPIOH5
BCBUS6/GPIOH6
BCBUS7/GPIOH7
PWREN#
SUSPEND#
RX0
TX0
R8
470
R9
470
JP3
RESET
AD0
AD1
AD2
AD3
AD4
AD5
AD6
AD7
AC0
AC1
AC2
AC3
AC4
AC5
AC6
AC7
SUSPEND
JP2
PWREN
BC7
BC6
BC5
BC4
BC3
BC2
BC1
BC0
BD7
BD6
BD5
BD4
BD3
BD2
BD1
BD0
EECS
EECLK
EEDATA
R2
12k 1%
R3
10k
RESET
R4
2.2k
R5
10k
R6
10k
R7
10k
IC2
93C46
CS
SK
DI
DO
VCC
DC
ORG
GND
C4
0.1uF
C5
27pF
C6
27pF
TITLE: ${PROJECTNAME}
Document Number:
REV:
Date: ${CURRENT_DATE}
Sheet: ${#}/${##}
Sheet: /
File: /autosave/autosave-working_1.kicad_sch
Title:
Size: User
Date:
Rev:
KiCad E.D.A. eeschema 7.0.6
Id: 1/1