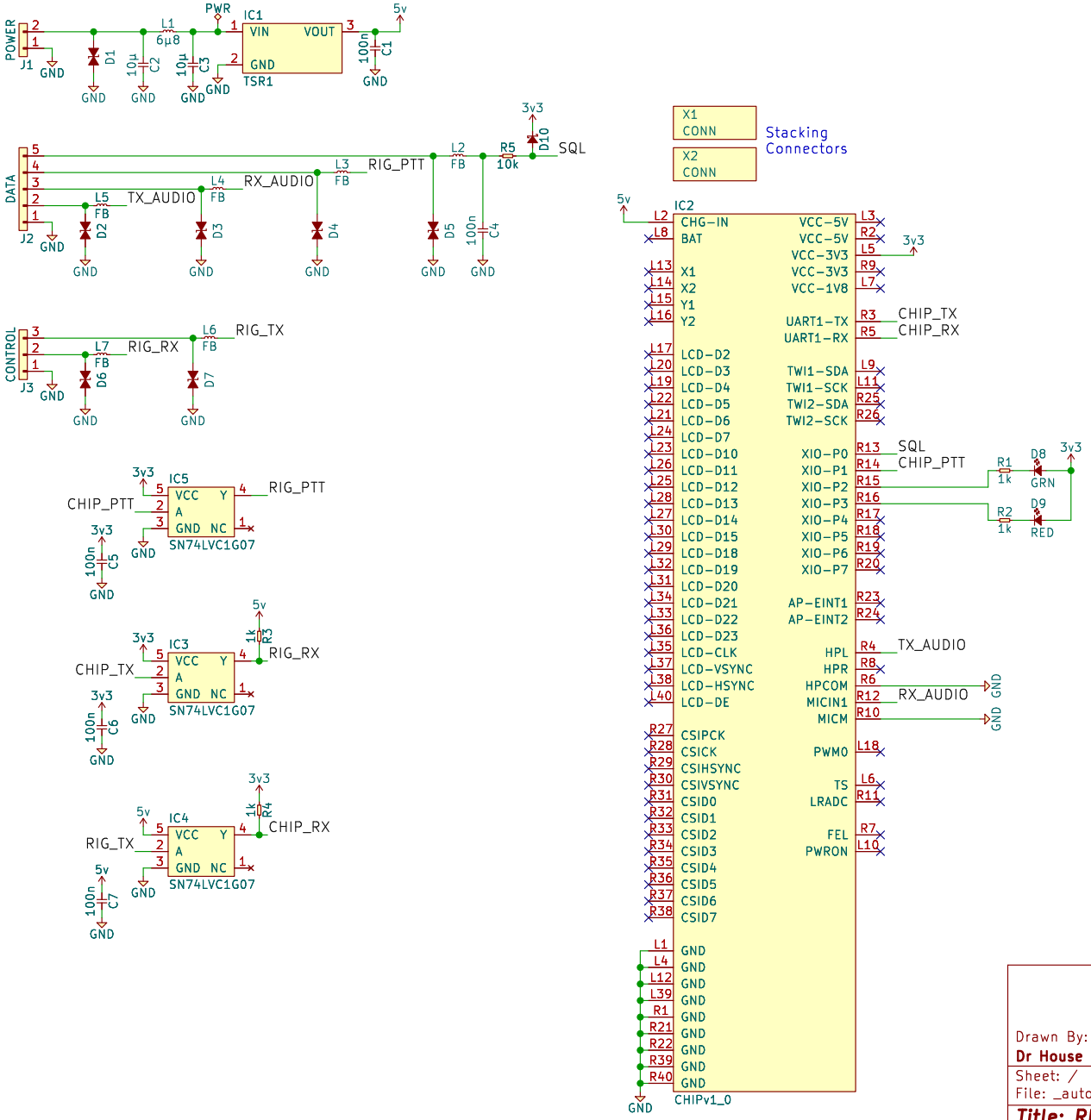

Drawn By: Adam Greig

Dr House Radio Technologies

Sheet: /

File: _autosave-_autosave-_autosave-working.kicad_sch

Title: RIGCHIP

Size: A4	Date: 2016-03-27	**Rev: 1**
KiCad E.D.A. eeschema 7.0.6		Id: 1/1