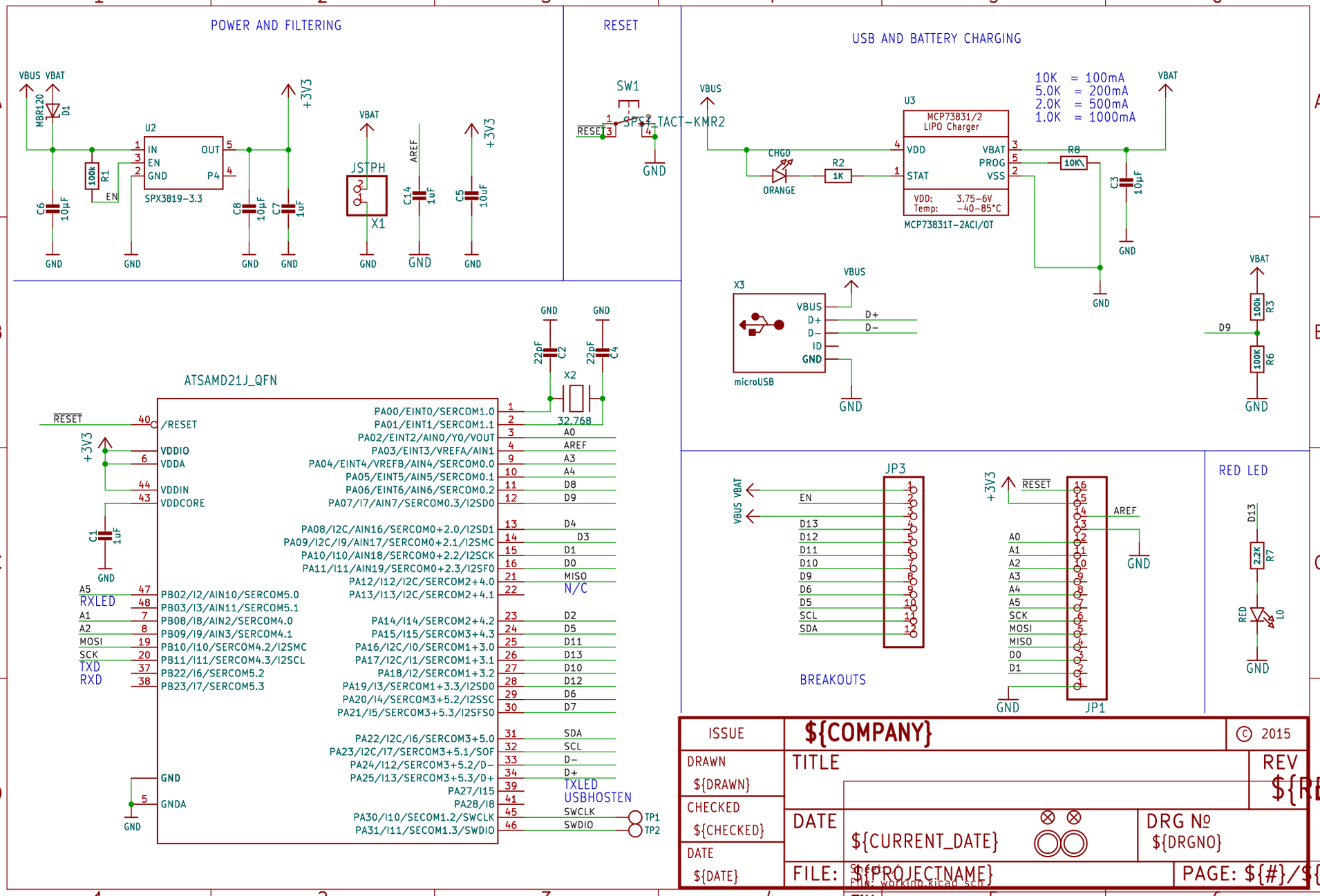
POWER AND FILTERING
VBUS VBAT
MBR120
D1
U2
IN
EN
GND
OUT
P4
SPX3819-3.3
100k
R1
EN
C6
10µF
C8
10µF
C7
1uF
+3V3
VBAT
JSTPH
X1
AREF
C14
1uF
C5
10uF
GND
RESET
SW1
SPST TACT-KMR2
RESET
USB AND BATTERY CHARGING
VBUS
U3
MCP73831/2
LIPO Charger
VDD
STAT
VBAT
PROG
VSS
VDD: 3.75-6V
Temp: -40-85°C
MCP73831T-2ACI/OT
CHGO
ORANGE
R2
1K
R8
10K
C3
10µF
10K = 100mA
5.0K = 200mA
2.0K = 500mA
1.0K = 1000mA
X3
VBUS
D+
D-
ID
GND
microUSB
D9
R3
100k
R6
100k
ATSAMD21J_QFN
22pF
C2
22pF
C4
X2
32.768
/RESET
VDDIO
VDDA
VDDIN
VDDCORE
C1
1uF
PA00/EINT0/SERCOM1.0
PA01/EINT1/SERCOM1.1
PA02/EINT2/AIN0/Y0/VOUT
PA03/EINT3/VREFA/AIN1
PA04/EINT4/VREFB/AIN4/SERCOM0.0
PA05/EINT5/AIN5/SERCOM0.1
PA06/EINT6/AIN6/SERCOM0.2
PA07/I7/AIN7/SERCOM0.3/I2SD0
PA08/I2C/AIN16/SERCOM0+2.0/I2SD1
PA09/I2C/I9/AIN17/SERCOM0+2.1/I2SMC
PA10/I10/AIN18/SERCOM0+2.2/I2SCK
PA11/I11/AIN19/SERCOM0+2.3/I2SF0
PA12/I12/I2C/SERCOM2+4.0
PA13/I13/I2C/SERCOM2+4.1
PA14/I14/SERCOM2+4.2
PA15/I15/SERCOM3+4.3
PA16/I2C/I0/SERCOM1+3.0
PA17/I2C/I1/SERCOM1+3.1
PA18/I2/SERCOM1+3.2
PA19/I3/SERCOM1+3.3/I2SD0
PA20/I4/SERCOM3+5.2/I2SSC
PA21/I5/SERCOM3+5.3/I2SFS0
PA22/I2C/I6/SERCOM3+5.0
PA23/I2C/I7/SERCOM3+5.1/SOF
PA24/I12/SERCOM3+5.2/D-
PA25/I13/SERCOM3+5.3/D+
PA27/I15
PA28/I8
PA30/I10/SECOM1.2/SWCLK
PA31/I11/SECOM1.3/SWDIO
PB02/I2/AIN10/SERCOM5.0
PB03/I3/AIN11/SERCOM5.1
PB08/I8/AIN2/SERCOM4.0
PB09/I9/AIN3/SERCOM4.1
PB10/I10/SERCOM4.2/I2SMC
PB11/I11/SERCOM4.3/I2SCL
PB22/I6/SERCOM5.2
PB23/I7/SERCOM5.3
A0
AREF
A3
A4
D8
D9
D4
D3
D1
D0
MISO
N/C
D2
D5
D11
D13
D10
D12
D6
D7
SDA
SCL
D-
D+
TXLED
USBHOSTEN
SWCLK
SWDIO
TP1
TP2
A5
RXLED
A1
A2
MOSI
SCK
TXD
RXD
JP3
EN
D13
D12
D11
D10
D9
D6
D5
SCL
SDA
JP1
RESET
AREF
A0
A1
A2
A3
A4
A5
SCK
MOSI
MISO
D0
D1
BREAKOUTS
RED LED
D13
2.2K
R7
RED
L0
ISSUE
${COMPANY}
© 2015
DRAWN
${DRAWN}
TITLE
REV
${REV}
CHECKED
${CHECKED}
DATE
${CURRENT_DATE}
DRG №
${DRGNO}
DATE
${DATE}
FILE: ${PROJECTNAME}
PAGE: ${#}/${##}
Title:
Size: User
Date:
Rev:
KiCad E.D.A. eeschema 7.0.6
Id: 1/1