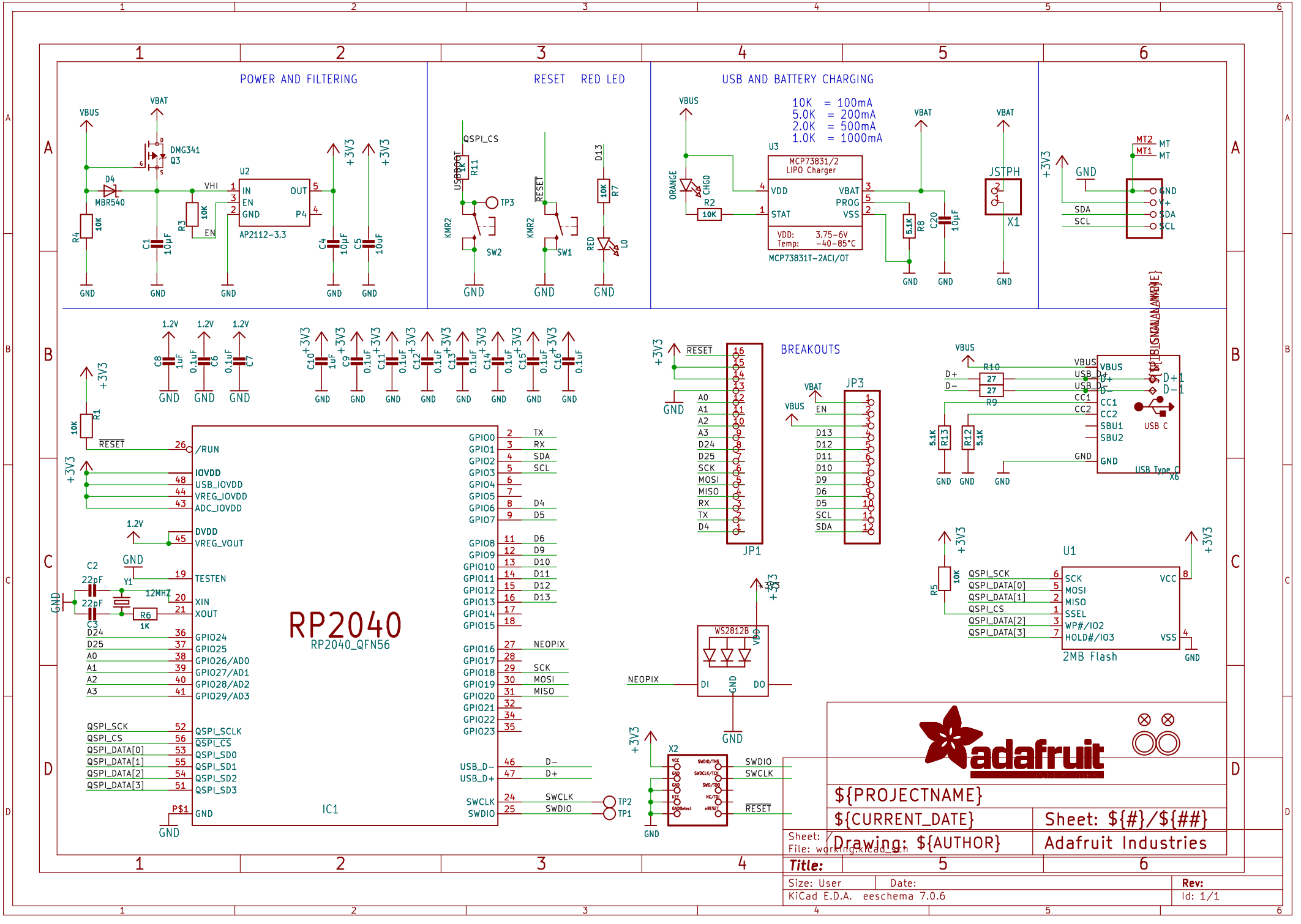
POWER AND FILTERING
RESET RED LED
USB AND BATTERY CHARGING
10K = 100mA
5.0K = 200mA
2.0K = 500mA
1.0K = 1000mA
MCP73831/2
LIPO Charger
MCP73831T-2ACI/OT
VDD: 3.75-6V
Temp: -40-85°C
AP2112-3.3
DMG341
MBR540
JSTPH
USB C
USB Type C
BREAKOUTS
JP1
JP3
RP2040
RP2040_QFN56
IC1
2MB Flash
WS2812B
NEOPIX
adafruit
${PROJECTNAME}
${CURRENT_DATE}
Sheet: ${#}/${##}
Drawing: ${AUTHOR}
Adafruit Industries
Title:
Size: User
Date:
Rev:
KiCad E.D.A. eeschema 7.0.6
Id: 1/1