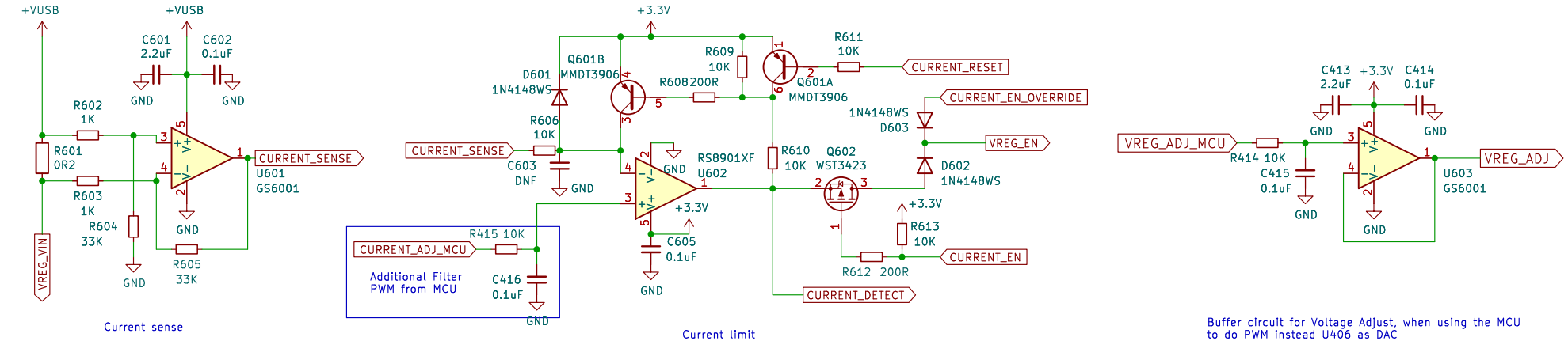

Current sense

Current limit

Q601 is a general purpose dual PNP transistor with EBCEBC pinout.
Matched pair Q401 can be substituted here, but Q401 is more expensive.

Buffer circuit for Voltage Adjust, when using the MCU
to do PWM instead U406 as DAC

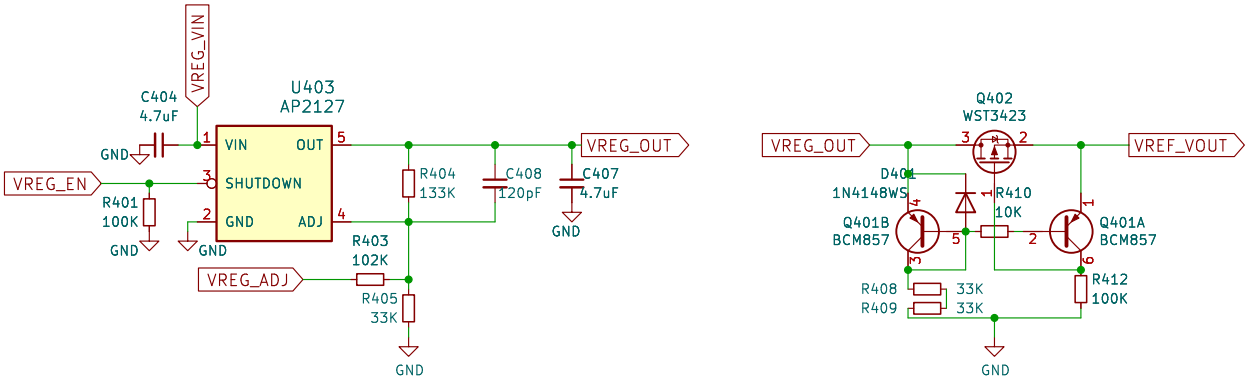

Adjustable voltage regulator

MCP1824 and AP2127 can be used, but have different reference voltages.

MCP1824: Ideal R403/R404/R405 = 77.96K/99.22K/10K
Closest values are 78K/100K/10K

AP2127: Ideal R403/R404/R405 = 31.25K/39.77K/10K
Closest values are 31.6K/40.2K/10K

Backflow prevention

Q401 is a matched PNP pair with EBCEBC pinout.
BCM857, BCM856, NST45010MW6T1G can be substituted.
The BCM part numbers are made by several manufacturers.
This part may be substituted in Q601, but it costs significantly more.

DMMT3906, PMP5201, PMP5501 are similar but have a BBCEEC pinout.
These can be substituted with minor changes to the PCB.

Sheet: /		
File: working_1.kicad_sch		
Title:		
Size: A4	Date:	**Rev:**
KiCad E.D.A. eeschema 7.0.6		Id: 1/1