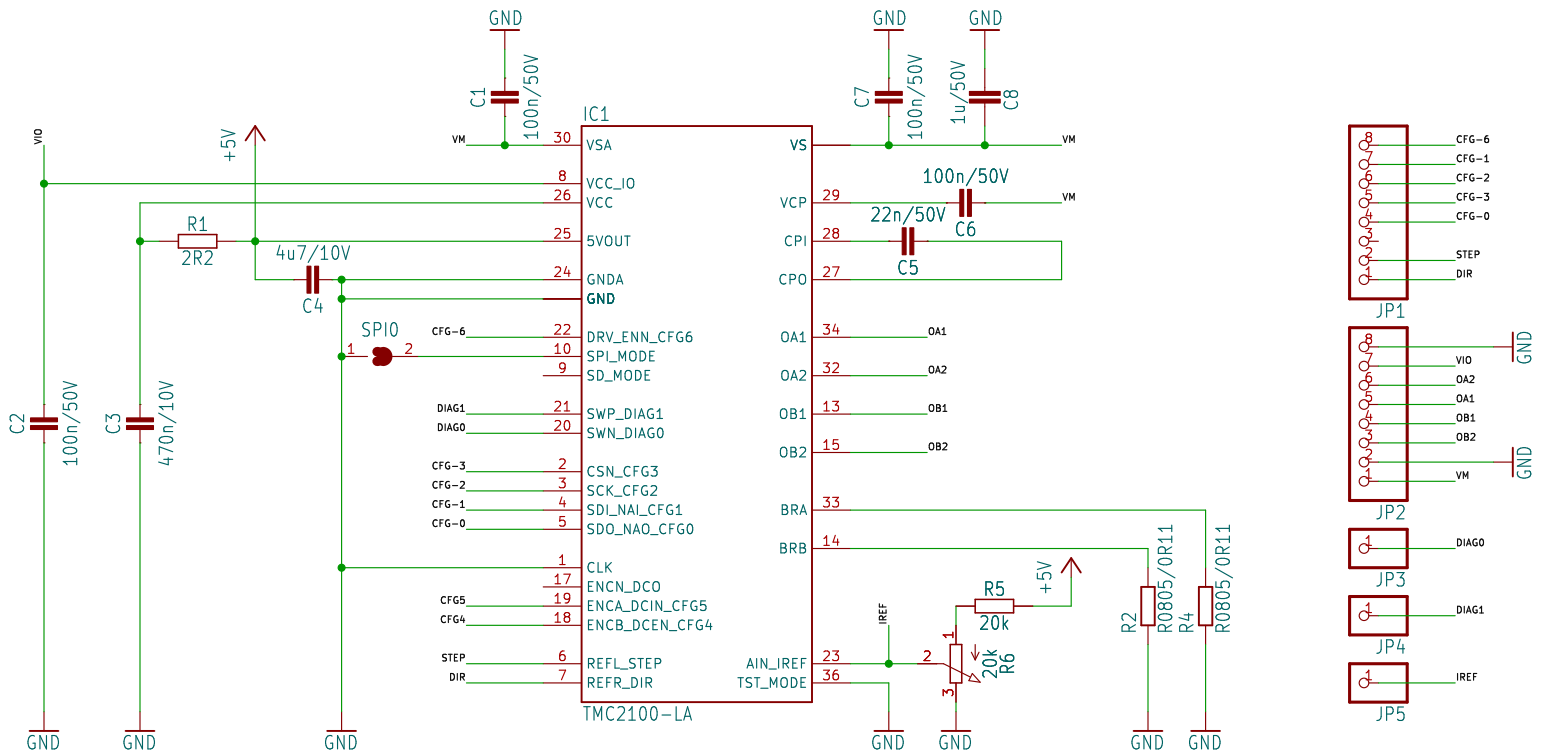

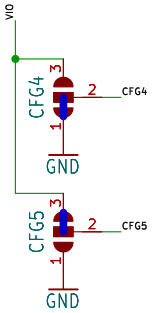

Standalone Operation (SPI_MODE=GND)

CFG6/En
GND -> Driver enabled
Vio -> Driver disabled
Open -> Driver enabled with ramp down from 100% to 34% after about 3s

CFG2	CFG1	Steps	Interpolation	Chopper Mode
GND	GND	1	No	spreadCycle
GND	Vio	2	No	spreadCycle
GND	Open	2	Yes to 256	spreadCycle
Vio	GND	4	No	spreadCycle
Vio	Vio	16	No	spreadCycle
Vio	Open	4	Yes to 256	spreadCycle
Open	GND	16	Yes to 256	spreadCycle
Open	Vio	4	Yes to 256	stealthChop
Open	Open	16	Yes to 256	stealthChop

Released under the Creative Commons Attribution Share-Alike License. http://creativecommons.org/licenses/by-sa/4.0/
Designed by Stephan Watterott (Watterott electronic)
Based on the Trinamic TMC2100-BOB

OSHW Watterott

Sheet: /
File: _autosave-_autosave-_autosave-working_3.kicad_sch

Title:

Size: User Date: Rev: v1.1/1
KiCad E.D.A. eeschema 7.0.6

Sheet: ${#}/${##}
${CURRENT_DATE}
${PROJECTNAME}