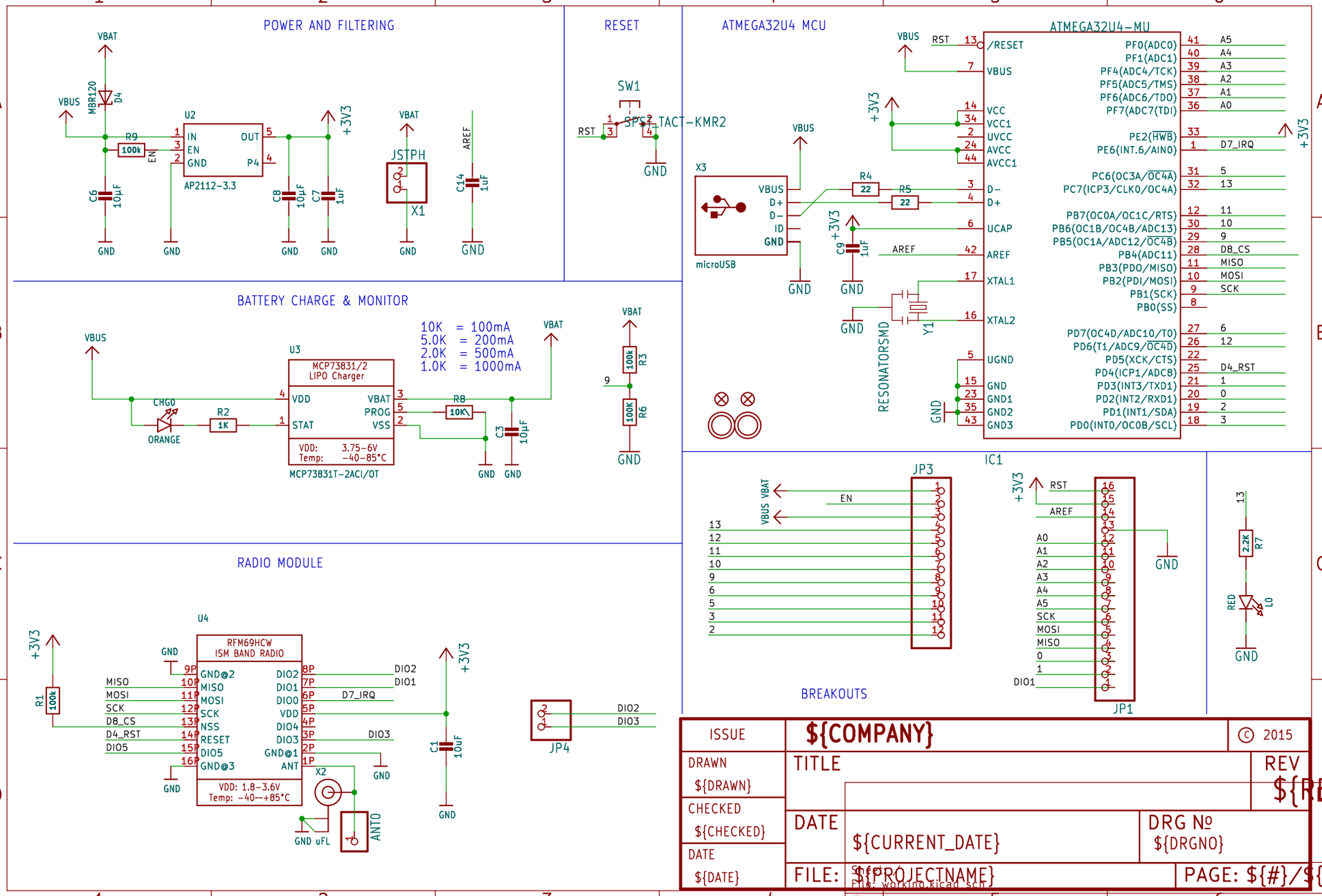
POWER AND FILTERING
VBAT
VBUS
MBR120
D4
R9
100k
EN
U2
IN
EN
GND
OUT
P4
AP2112-3.3
C6
10µF
C8
10µF
C7
1uF
+3V3
JSTPH
X1
C14
1uF
AREF
GND
RESET
SW1
SPST-TACT-KMR2
RST
ATMEGA32U4 MCU
ATMEGA32U4-MU
/RESET
VBUS
VCC
VCC1
UVCC
AVCC
AVCC1
D-
D+
UCAP
AREF
XTAL1
XTAL2
UGND
GND
GND1
GND2
GND3
PF0(ADC0)
PF1(ADC1)
PF4(ADC4/TCK)
PF5(ADC5/TMS)
PF6(ADC6/TDO)
PF7(ADC7(TDI)
PE2(HWB)
PE6(INT.6/AIN0)
PC6(OC3A/OC4A)
PC7(ICP3/CLK0/OC4A)
PB7(OC0A/OC1C/RTS)
PB6(OC1B/OC4B/ADC13)
PB5(OC1A/ADC12/OC4B)
PB4(ADC11)
PB3(PDO/MISO)
PB2(PDI/MOSI)
PB1(SCK)
PB0(SS)
PD7(OC4D/ADC10/T0)
PD6(T1/ADC9/OC4D)
PD5(XCK/CTS)
PD4(ICP1/ADC8)
PD3(INT3/TXD1)
PD2(INT2/RXD1)
PD1(INT1/SDA)
PD0(INT0/OC0B/SCL)
D7_IRQ
D8_CS
MISO
MOSI
SCK
D4_RST
X3
microUSB
R4
22
R5
22
C9
1uF
Y1
RESONATORSMD
BATTERY CHARGE & MONITOR
10K = 100mA
5.0K = 200mA
2.0K = 500mA
1.0K = 1000mA
U3
MCP73831/2
LIPO Charger
VDD
STAT
VBAT
PROG
VSS
VDD: 3.75-6V
Temp: -40-85°C
MCP73831T-2ACI/OT
CHG0
ORANGE
R2
1K
R8
10K
C3
10µF
R3
100k
R6
100K
RADIO MODULE
U4
RFM69HCW
ISM BAND RADIO
GND@2
MISO
MOSI
SCK
NSS
RESET
DIO5
GND@3
DIO2
DIO1
DIO0
VDD
DIO4
DIO3
GND@1
ANT
VDD: 1.8-3.6V
Temp: -40~+85°C
R1
100k
D8_CS
D4_RST
DIO5
X2
GND uFL
ANT0
C1
10uF
JP4
IC1
JP3
JP1
BREAKOUTS
R7
2.2K
RED
L0
ISSUE
${COMPANY}
© 2015
DRAWN
${DRAWN}
TITLE
REV
${REV}
CHECKED
${CHECKED}
DATE
${CURRENT_DATE}
DRG №
${DRGNO}
DATE
${DATE}
FILE: ${PROJECTNAME}
PAGE: ${#}/${##}
Sheet: /
File: workino.kicad_sch
Title:
Size: User
Date:
Rev:
KiCad E.D.A. eeschema 7.0.6
Id: 1/1