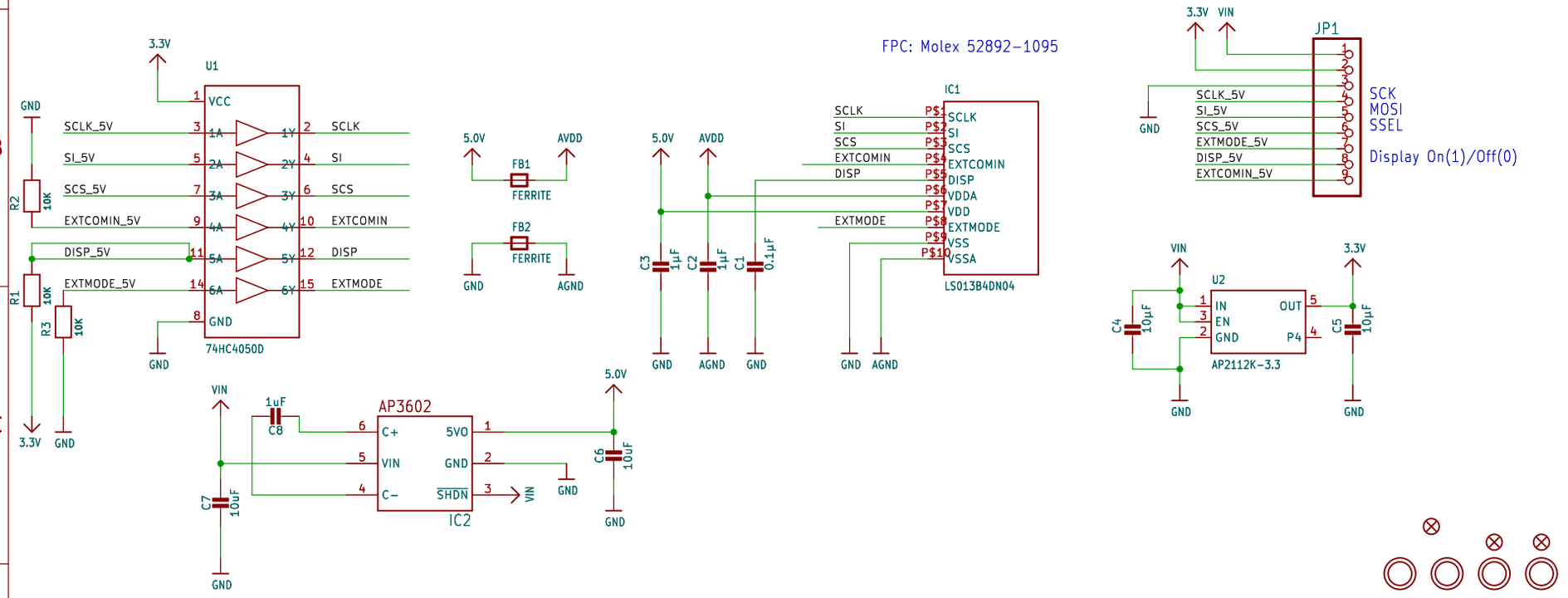

ISSUE	${COMPANY}	© ${YEAR}
DRAWN ${DRAWN}	TITLE	REV ${REV}
CHECKED ${CHECKED}	DATE ${CURRENT_DATE}	DRG № ${DRGNO}
DATE ${DATE}	FILE: ${PROJECTNAME}	PAGE: ${#}/${##}

Sheet: /
File: working.kicad_sch

Title:		
Size: User	Date:	Rev:
KiCad E.D.A. eeschema 7.0.6		Id: 1/1