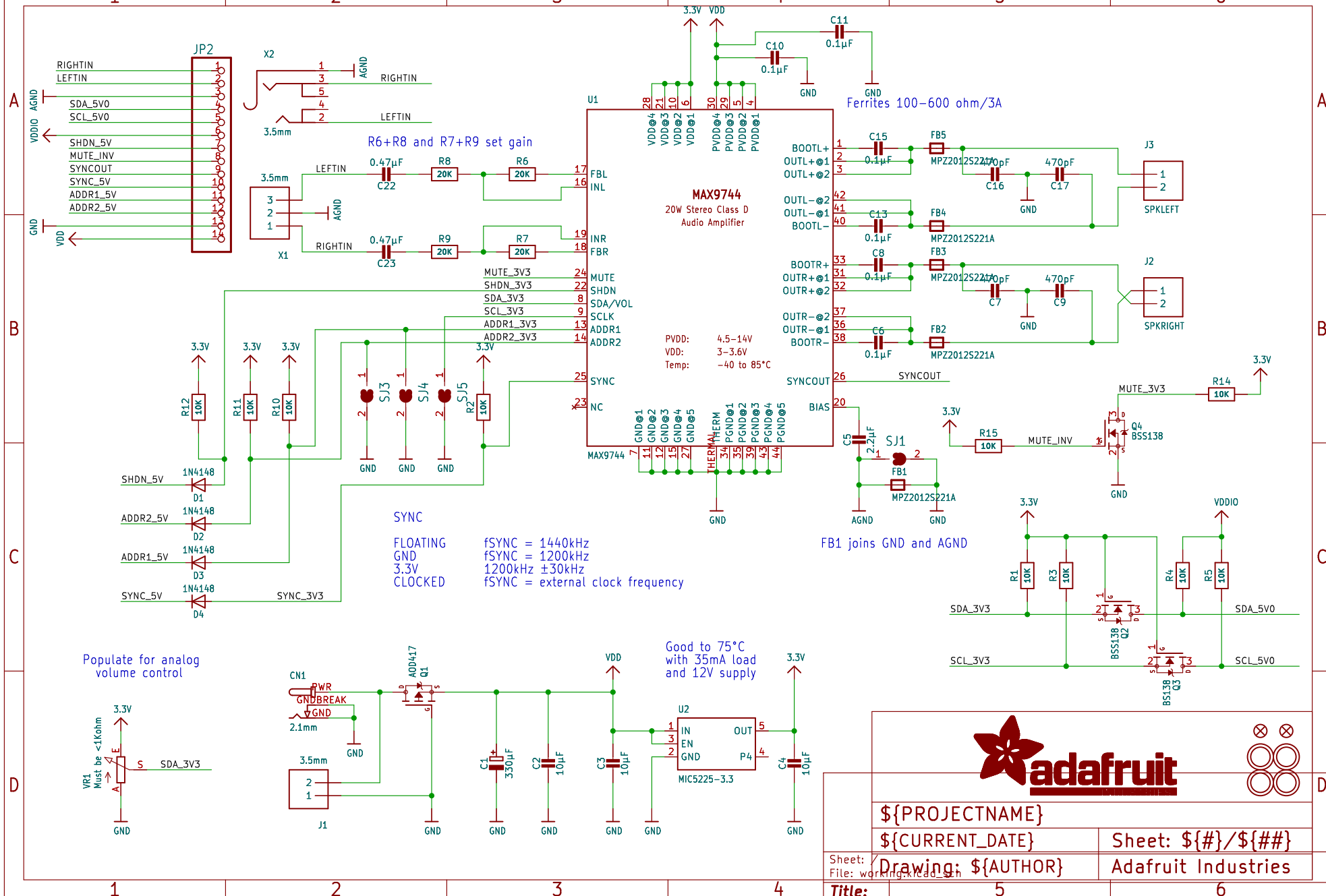
JP2
RIGHTIN
LEFTIN
SDA_5V0
SCL_5V0
SHDN_5V
MUTE_INV
SYNCOUT
SYNC_5V
ADDR1_5V
ADDR2_5V
AGND
VDDIO
GND
VDD
X2
3.5mm
X1
R6+R8 and R7+R9 set gain
0.47µF
C22
C23
R8
R9
R6
R7
20K
U1
MAX9744
20W Stereo Class D
Audio Amplifier
FBL
INL
INR
FBR
MUTE
SHDN
SDA/VOL
SCLK
ADDR1
ADDR2
SYNC
NC
MUTE_3V3
SHDN_3V3
SDA_3V3
SCL_3V3
ADDR1_3V3
ADDR2_3V3
PVDD: 4.5–14V
VDD: 3–3.6V
Temp: –40 to 85°C
3.3V
VDD
C10
C11
0.1µF
Ferrites 100–600 ohm/3A
BOOTL+
OUTL+@1
OUTL+@2
OUTL–@2
OUTL–@1
BOOTL–
BOOTR+
OUTR+@1
OUTR+@2
OUTR–@2
OUTR–@1
BOOTR–
SYNCOUT
BIAS
C15
C13
C8
C6
FB5
FB4
FB3
FB2
MPZ2012S221A
470pF
C16
C17
C7
C9
J3
J2
SPKLEFT
SPKRIGHT
R12
R11
R10
R2
SJ3
SJ4
SJ5
1N4148
D1
D2
D3
D4
SHDN_5V
ADDR2_5V
ADDR1_5V
SYNC_5V
SYNC_3V3
SYNC
FLOATING fSYNC = 1440kHz
GND fSYNC = 1200kHz
3.3V 1200kHz ±30kHz
CLOCKED fSYNC = external clock frequency
C5
2.2µF
SJ1
FB1
FB1 joins GND and AGND
R15
R14
MUTE_INV
Q4
BSS138
R1
R3
R4
R5
SDA_3V3
SCL_3V3
SDA_5V0
SCL_5V0
Q2
Q3
VDDIO
Populate for analog
volume control
VR1
Must be <1Kohm
CN1
PWR
GNDBREAK
GND
2.1mm
AOD417
Q1
C1
330µF
C2
10µF
C3
C4
Good to 75°C
with 35mA load
and 12V supply
U2
IN
EN
GND
OUT
P4
MIC5225-3.3
J1
adafruit
${PROJECTNAME}
${CURRENT_DATE}
Sheet: ${#}/${##}
Drawing: ${AUTHOR}
Adafruit Industries
Sheet: /
File: working.kicad_sch
Title:
Size: User
Date:
Rev:
KiCad E.D.A. eeschema 7.0.6
Id: 1/1