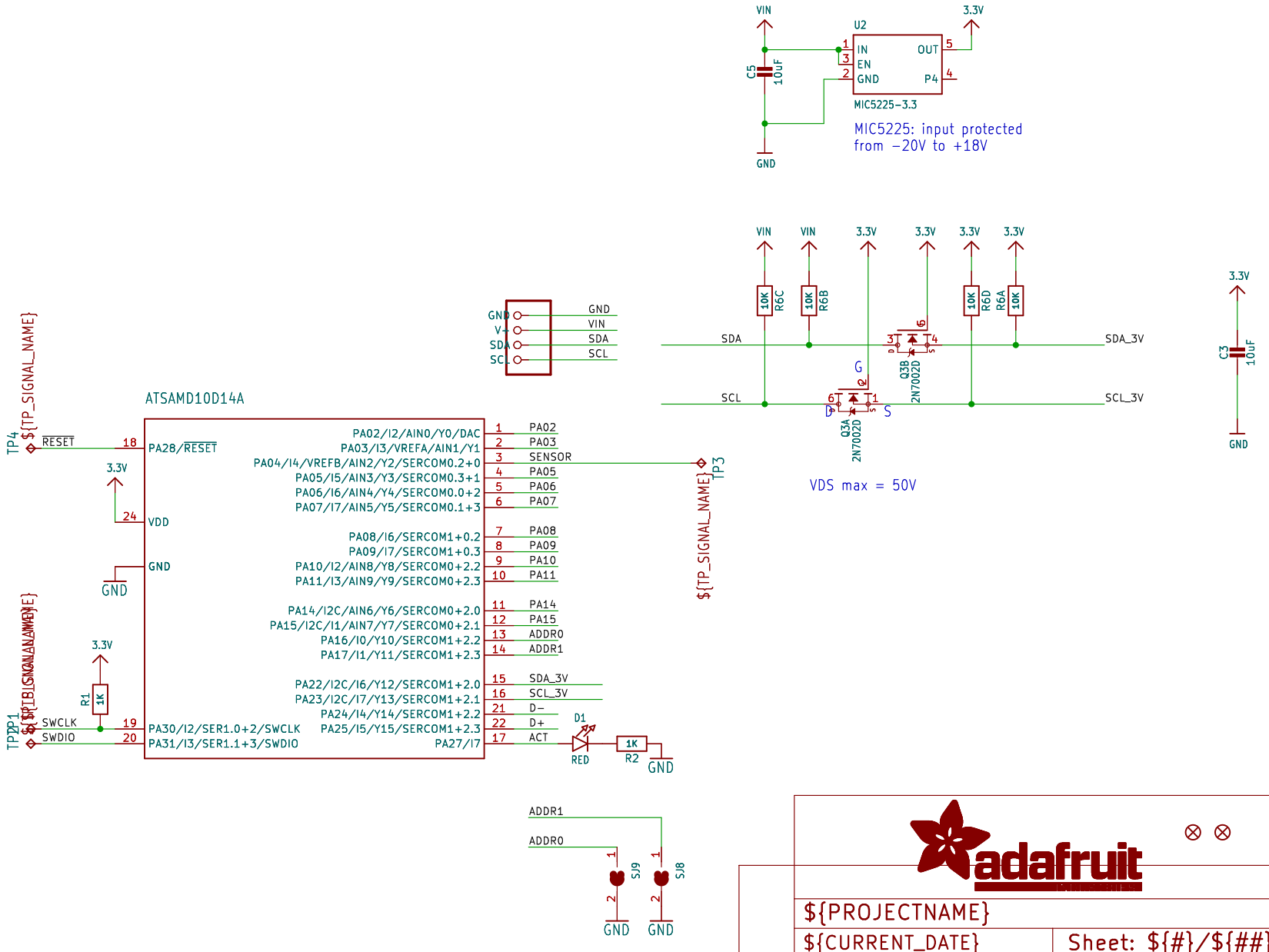
VIN
3.3V
U2
IN
EN
GND
OUT
P4
MIC5225-3.3
C5
10uF
GND
MIC5225: input protected
from -20V to +18V
VIN
VIN
3.3V
3.3V
3.3V
3.3V
10K R6C
10K R6B
10K R6D
10K R6A
SDA
SCL
SDA_3V
SCL_3V
Q3B 2N7002D
Q3A 2N7002D
VDS max = 50V
3.3V
C3
10uF
GND
GND
V+
SDA
SC
GND
VIN
SDA
SCL
ATSAMD10D14A
TP4
${TP_SIGNAL_NAME}
RESET
18
PA28/RESET
3.3V
24
VDD
GND
GND
PA02/I2/AIN0/Y0/DAC
PA03/I3/VREFA/AIN1/Y1
PA04/I4/VREFB/AIN2/Y2/SERCOM0.2+0
PA05/I5/AIN3/Y3/SERCOM0.3+1
PA06/I6/AIN4/Y4/SERCOM0.0+2
PA07/I7/AIN5/Y5/SERCOM0.1+3
PA08/I6/SERCOM1+0.2
PA09/I7/SERCOM1+0.3
PA10/I2/AIN8/Y8/SERCOM0+2.2
PA11/I3/AIN9/Y9/SERCOM0+2.3
PA14/I2C/AIN6/Y6/SERCOM0+2.0
PA15/I2C/I1/AIN7/Y7/SERCOM0+2.1
PA16/I0/Y10/SERCOM1+2.2
PA17/I1/Y11/SERCOM1+2.3
PA22/I2C/I6/Y12/SERCOM1+2.0
PA23/I2C/I7/Y13/SERCOM1+2.1
PA24/I4/Y14/SERCOM1+2.2
PA25/I5/Y15/SERCOM1+2.3
PA27/I7
PA30/I2/SER1.0+2/SWCLK
PA31/I3/SER1.1+3/SWDIO
1 PA02
2 PA03
3 SENSOR
4 PA05
5 PA06
6 PA07
7 PA08
8 PA09
9 PA10
10 PA11
11 PA14
12 PA15
13 ADDR0
14 ADDR1
15 SDA_3V
16 SCL_3V
21 D-
22 D+
17 ACT
TP3
${TP_SIGNAL_NAME}
R1
1K
3.3V
TP1
${TP_SIGNAL_NAME}
SWCLK
SWDIO
19
20
D1
RED
1K
R2
GND
ADDR1
ADDR0
SJ9
SJ8
GND
GND
adafruit
${PROJECTNAME}
${CURRENT_DATE}
Sheet: ${#}/${##}
Drawing: ${AUTHOR}
Adafruit Industries
Sheet: /
File: working.kicad_sch
Title:
Size: User
Date:
Rev:
KiCad E.D.A. eeschema 7.0.6
Id: 1/1