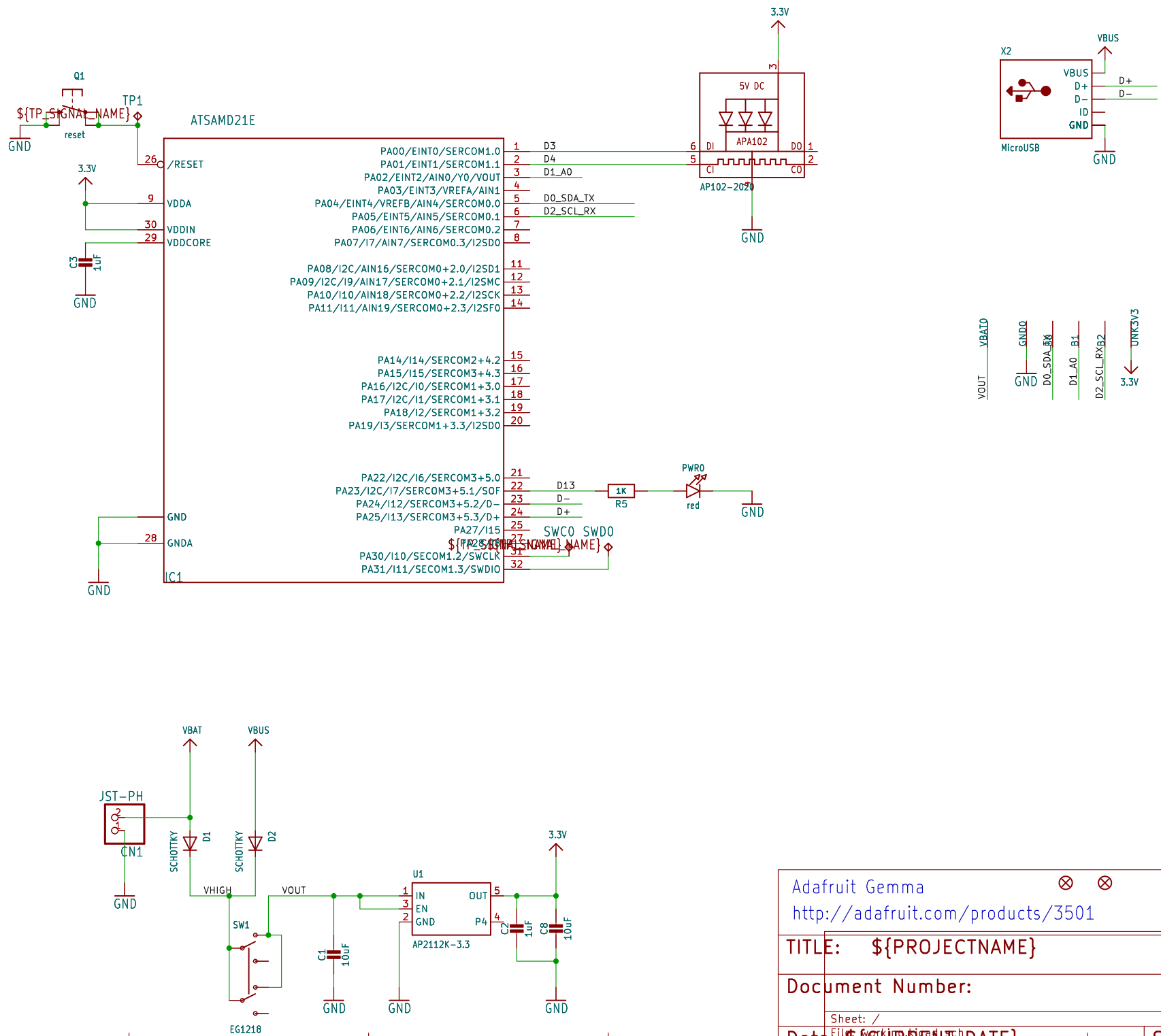

Adafruit Gemma

http://adafruit.com/products/3501

CC 2.5 BY−SA

TITLE: ${PROJECTNAME}

Document Number:

REV:

Sheet: /

File: working.kicad_sch

Date: ${CURRENT_DATE}

Sheet: ${#}/${##}

Title:

Size: User

Date:

Rev:

KiCad E.D.A. eeschema 7.0.6

Id: 1/1