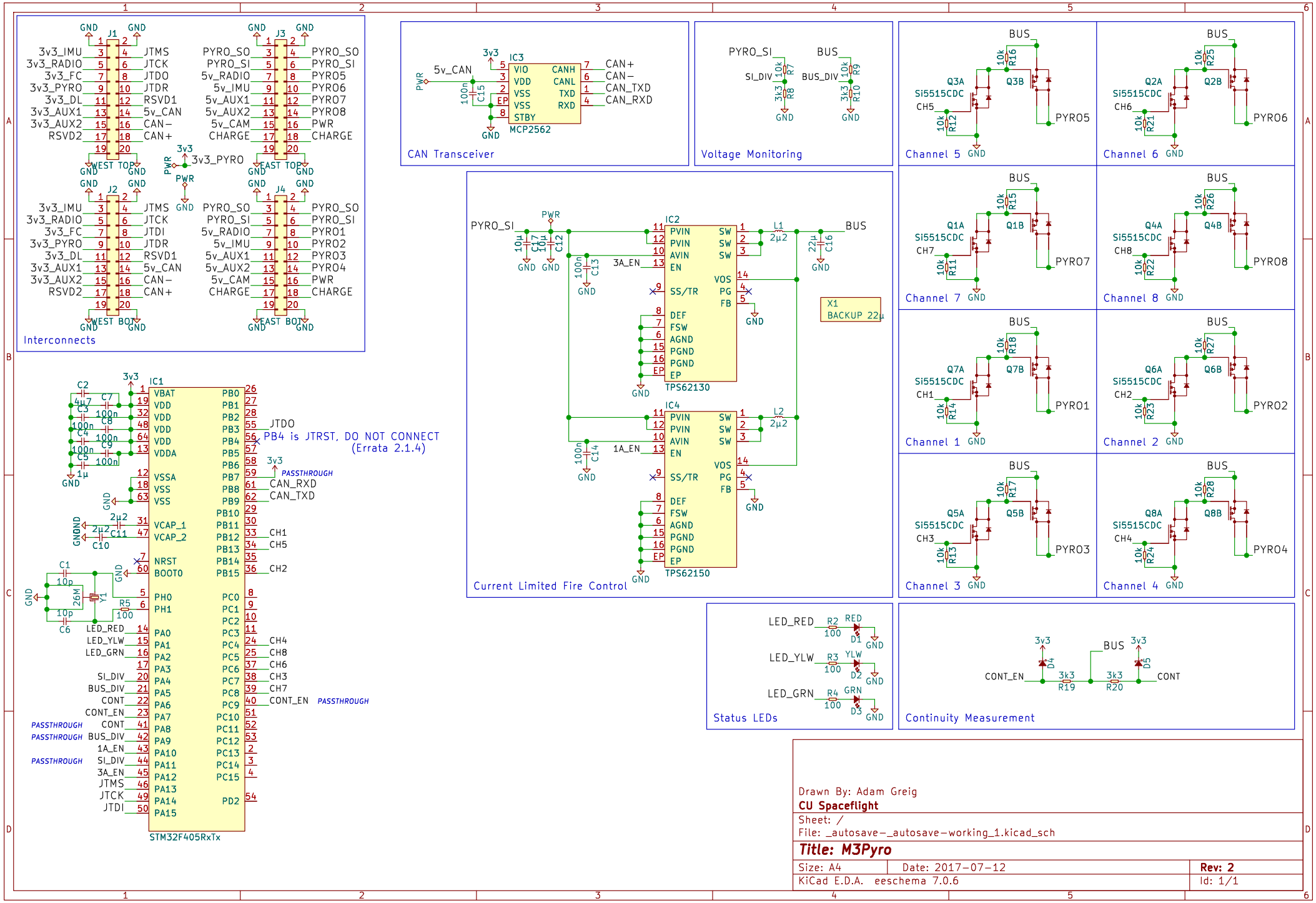
Interconnects
J1
WEST TOP
J2
WEST BOT
J3
EAST TOP
J4
EAST BOT
3v3_IMU
3v3_RADIO
3v3_FC
3v3_PYRO
3v3_DL
3v3_AUX1
3v3_AUX2
RSVD2
JTMS
JTCK
JTDO
JTDR
JTDI
RSVD1
5v_CAN
CAN−
CAN+
PYRO_SO
PYRO_SI
5v_RADIO
5v_IMU
5v_AUX1
5v_AUX2
5v_CAM
CHARGE
PWR
PYRO5
PYRO6
PYRO7
PYRO8
PYRO1
PYRO2
PYRO3
PYRO4
3v3_PYRO
CAN Transceiver
IC3
MCP2562
VIO
VDD
VSS
STBY
CANH
CANL
TXD
RXD
EP
CAN_TXD
CAN_RXD
Voltage Monitoring
BUS
BUS_DIV
SI_DIV
Current Limited Fire Control
IC2
TPS62130
IC4
TPS62150
PVIN
AVIN
EN
SS/TR
DEF
FSW
AGND
PGND
SW
VOS
PG
FB
3A_EN
1A_EN
L1
L2
2µ2
22µ
X1
BACKUP 22µ
Channel 5
Channel 6
Channel 7
Channel 8
Channel 1
Channel 2
Channel 3
Channel 4
Q3A
Q3B
Q2A
Q2B
Q1A
Q1B
Q4A
Q4B
Q7A
Q7B
Q6A
Q6B
Q5A
Q5B
Q8A
Q8B
Si5515CDC
CH5
CH6
CH7
CH8
CH1
CH2
CH3
CH4
IC1
STM32F405RxTx
VBAT
VDD
VDDA
VSSA
VSS
VCAP_1
VCAP_2
NRST
BOOT0
PH0
PH1
PA0
PA1
PA2
PA3
PA4
PA5
PA6
PA7
PA8
PA9
PA10
PA11
PA12
PA13
PA14
PA15
PB0
PB1
PB2
PB3
PB4
PB5
PB6
PB7
PB8
PB9
PB10
PB11
PB12
PB13
PB14
PB15
PC0
PC1
PC2
PC3
PC4
PC5
PC6
PC7
PC8
PC9
PC10
PC11
PC12
PC13
PC14
PC15
PD2
JTDO
PB4 is JTRST, DO NOT CONNECT
(Errata 2.1.4)
PASSTHROUGH
CAN_RXD
CAN_TXD
CONT_EN
LED_RED
LED_YLW
LED_GRN
CONT
BUS_DIV
1A_EN
SI_DIV
3A_EN
JTMS
JTCK
JTDI
Status LEDs
Continuity Measurement
CONT
Drawn By: Adam Greig
CU Spaceflight
Sheet: /
File: _autosave-_autosave-working_1.kicad_sch
Title: M3Pyro
Size: A4
Date: 2017-07-12
Rev: 2
KiCad E.D.A. eeschema 7.0.6
Id: 1/1