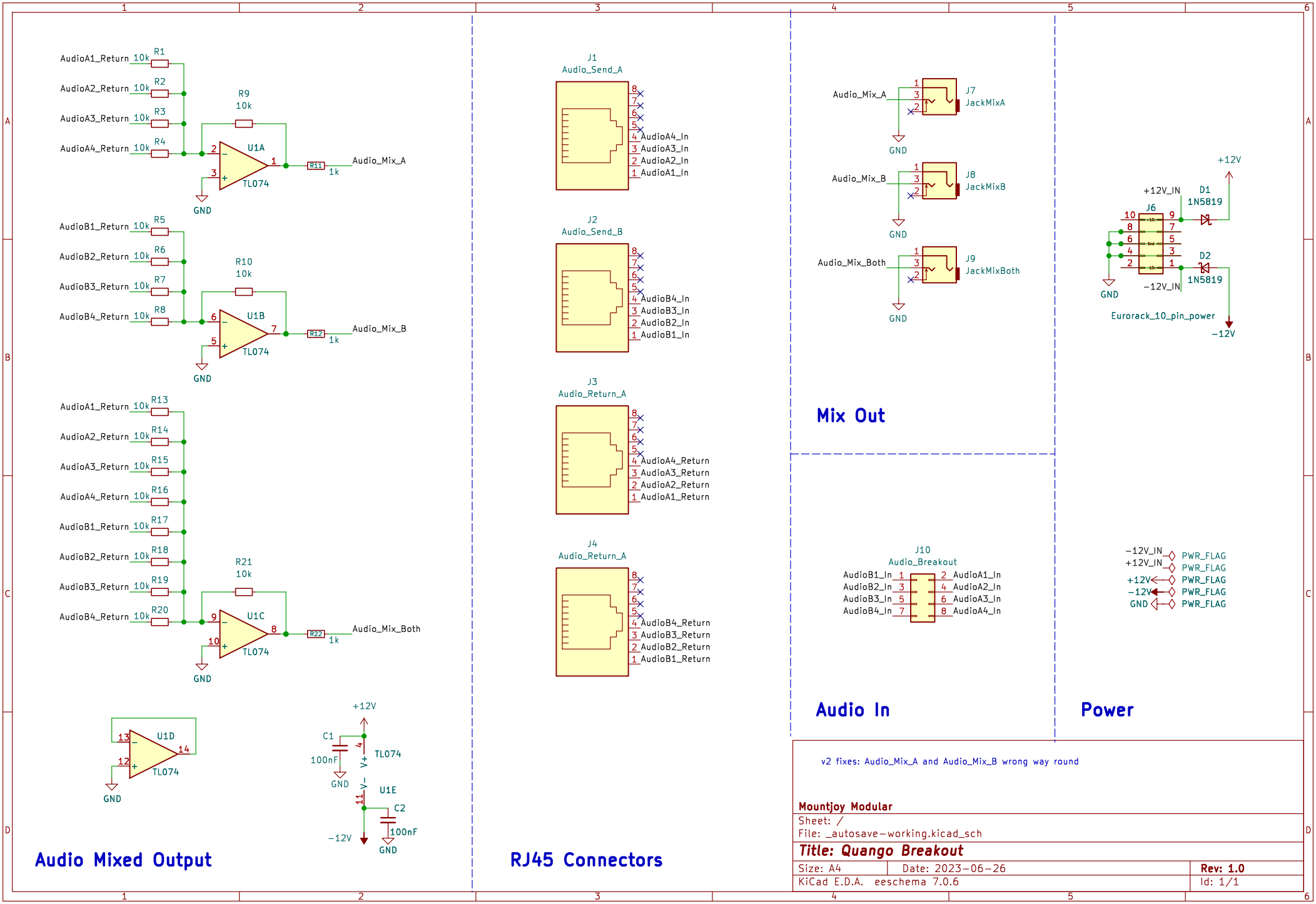
AudioA1_Return 10k R1
AudioA2_Return 10k R2
AudioA3_Return 10k R3
AudioA4_Return 10k R4
R9 10k
U1A
TL074
R11 1k
Audio_Mix_A
GND
AudioB1_Return 10k R5
AudioB2_Return 10k R6
AudioB3_Return 10k R7
AudioB4_Return 10k R8
R10 10k
U1B
TL074
R12 1k
Audio_Mix_B
GND
AudioA1_Return 10k R13
AudioA2_Return 10k R14
AudioA3_Return 10k R15
AudioA4_Return 10k R16
AudioB1_Return 10k R17
AudioB2_Return 10k R18
AudioB3_Return 10k R19
AudioB4_Return 10k R20
R21 10k
U1C
TL074
R22 1k
Audio_Mix_Both
GND
U1D
TL074
GND
+12V
C1 100nF
TL074
GND
U1E
C2 100nF
−12V
GND
Audio Mixed Output
J1 Audio_Send_A
AudioA4_In
AudioA3_In
AudioA2_In
AudioA1_In
J2 Audio_Send_B
AudioB4_In
AudioB3_In
AudioB2_In
AudioB1_In
J3 Audio_Return_A
AudioA4_Return
AudioA3_Return
AudioA2_Return
AudioA1_Return
J4 Audio_Return_A
AudioB4_Return
AudioB3_Return
AudioB2_Return
AudioB1_Return
RJ45 Connectors
Audio_Mix_A
J7 JackMixA
GND
Audio_Mix_B
J8 JackMixB
GND
Audio_Mix_Both
J9 JackMixBoth
GND
Mix Out
+12V
+12V_IN
D1 1N5819
J6
D2 1N5819
−12V_IN
GND
Eurorack_10_pin_power
−12V
−12V_IN PWR_FLAG
+12V_IN PWR_FLAG
+12V PWR_FLAG
−12V PWR_FLAG
GND PWR_FLAG
J10 Audio_Breakout
AudioB1_In AudioA1_In
AudioB2_In AudioA2_In
AudioB3_In AudioA3_In
AudioB4_In AudioA4_In
Audio In
Power
v2 fixes: Audio_Mix_A and Audio_Mix_B wrong way round
Mountjoy Modular
Sheet: /
File: _autosave-working.kicad_sch
Title: Quango Breakout
Size: A4
Date: 2023-06-26
Rev: 1.0
KiCad E.D.A. eeschema 7.0.6
Id: 1/1