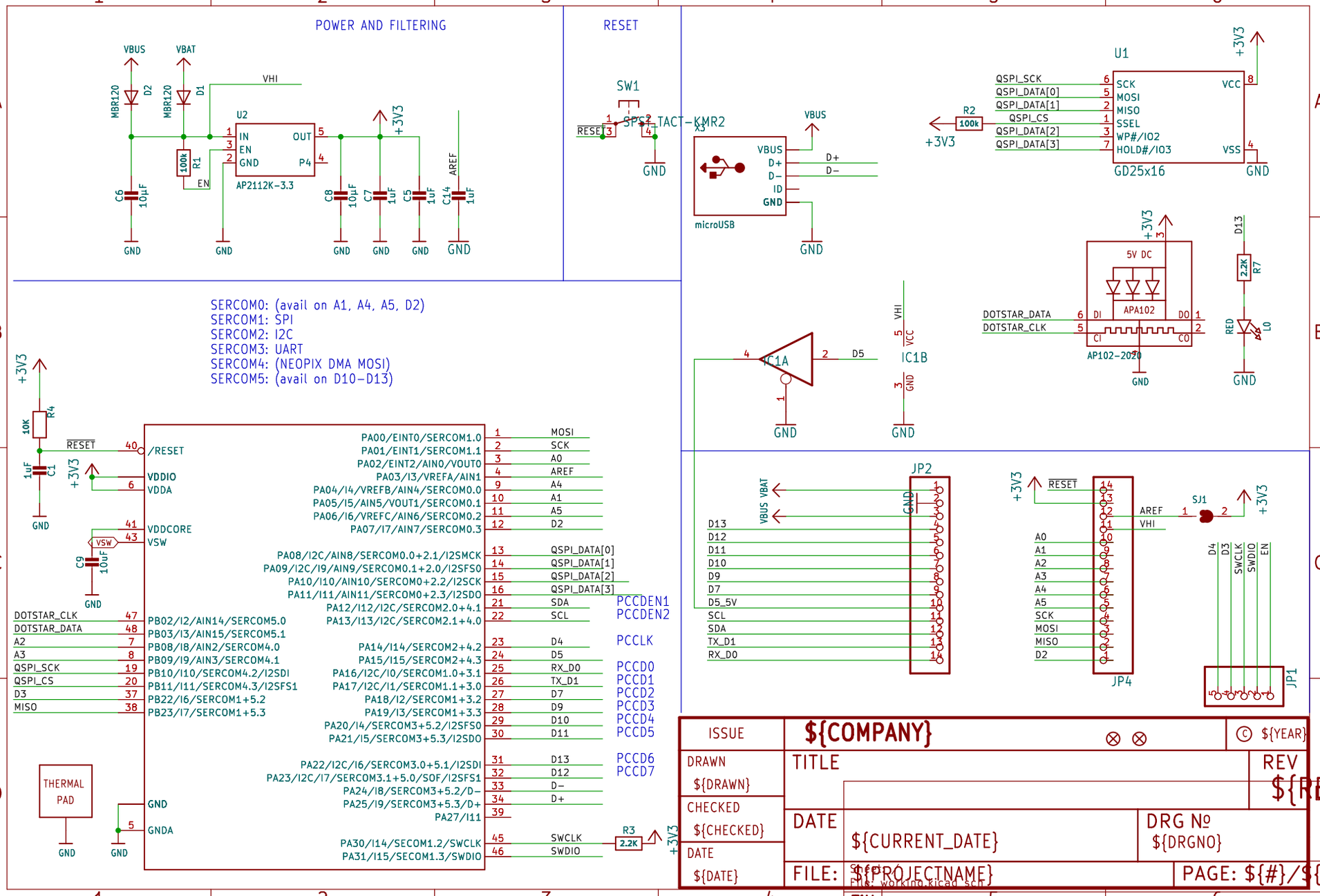
POWER AND FILTERING
VBUS
VBAT
MBR120
D2
D1
VHI
U2
IN
EN
GND
OUT
P4
AP2112K-3.3
100k
R1
EN
C6
10µF
C8
10µF
C7
1uF
C5
1uF
C14
1uF
AREF
+3V3
GND
RESET
SW1
SPST TACT-KMR2
RESET
GND
X3
VBUS
D+
D−
ID
GND
microUSB
U1
QSPI_SCK
QSPI_DATA[0]
QSPI_DATA[1]
QSPI_CS
QSPI_DATA[2]
QSPI_DATA[3]
SCK
MOSI
MISO
SSEL
WP#/IO2
HOLD#/IO3
VCC
VSS
GD25x16
R2
100k
SERCOM0: (avail on A1, A4, A5, D2)
SERCOM1: SPI
SERCOM2: I2C
SERCOM3: UART
SERCOM4: (NEOPIX DMA MOSI)
SERCOM5: (avail on D10–D13)
IC1A
D5
IC1B
VHI
VCC
GND
5V DC
APA102
DOTSTAR_DATA
DOTSTAR_CLK
DI
DO
CI
CO
AP102-2020
D13
2.2K
R7
RED
L0
R4
10K
1uF
C1
/RESET
VDDIO
VDDA
VDDCORE
VSW
C9
10uF
DOTSTAR_CLK
DOTSTAR_DATA
A2
A3
QSPI_SCK
QSPI_CS
D3
MISO
PB02/I2/AIN14/SERCOM5.0
PB03/I3/AIN15/SERCOM5.1
PB08/I8/AIN2/SERCOM4.0
PB09/I9/AIN3/SERCOM4.1
PB10/I10/SERCOM4.2/I2SDI
PB11/I11/SERCOM4.3/I2SFS1
PB22/I6/SERCOM1+5.2
PB23/I7/SERCOM1+5.3
GND
GNDA
THERMAL PAD
PA00/EINT0/SERCOM1.0
PA01/EINT1/SERCOM1.1
PA02/EINT2/AIN0/VOUT0
PA03/I3/VREFA/AIN1
PA04/I4/VREFB/AIN4/SERCOM0.0
PA05/I5/AIN5/VOUT1/SERCOM0.1
PA06/I6/VREFC/AIN6/SERCOM0.2
PA07/I7/AIN7/SERCOM0.3
PA08/I2C/AIN8/SERCOM0.0+2.1/I2SMCK
PA09/I2C/I9/AIN9/SERCOM0.1+2.0/I2SFS0
PA10/I10/AIN10/SERCOM0+2.2/I2SCK
PA11/I11/AIN11/SERCOM0+2.3/I2SDO
PA12/I12/I2C/SERCOM2.0+4.1
PA13/I13/I2C/SERCOM2.1+4.0
PA14/I14/SERCOM2+4.2
PA15/I15/SERCOM2+4.3
PA16/I2C/I0/SERCOM1.0+3.1
PA17/I2C/I1/SERCOM1.1+3.0
PA18/I2/SERCOM1+3.2
PA19/I3/SERCOM1+3.3
PA20/I4/SERCOM3+5.2/I2SFS0
PA21/I5/SERCOM3+5.3/I2SDO
PA22/I2C/I6/SERCOM3.0+5.1/I2SDI
PA23/I2C/I7/SERCOM3.1+5.0/SOF/I2SFS1
PA24/I8/SERCOM3+5.2/D−
PA25/I9/SERCOM3+5.3/D+
PA27/I11
PA30/I14/SECOM1.2/SWCLK
PA31/I15/SECOM1.3/SWDIO
MOSI
SCK
A0
AREF
A4
A1
A5
D2
QSPI_DATA[0]
QSPI_DATA[1]
QSPI_DATA[2]
QSPI_DATA[3]
SDA
SCL
D4
D5
RX_D0
TX_D1
D7
D9
D10
D11
D13
D12
D−
D+
SWCLK
SWDIO
PCCDEN1
PCCDEN2
PCCLK
PCCD0
PCCD1
PCCD2
PCCD3
PCCD4
PCCD5
PCCD6
PCCD7
R3
2.2K
JP2
JP4
JP1
SJ1
D13
D12
D11
D10
D9
D7
D5_5V
SCL
SDA
TX_D1
RX_D0
VBUS
VBAT
GND
RESET
AREF
VHI
A0
A1
A2
A3
A4
A5
SCK
MOSI
MISO
D2
D4
D3
SWCLK
SWDIO
EN
ISSUE
${COMPANY}
© ${YEAR}
DRAWN
${DRAWN}
TITLE
REV
${REV}
CHECKED
${CHECKED}
DATE
${CURRENT_DATE}
DRG № ${DRGNO}
DATE
${DATE}
FILE: ${PROJECTNAME}
PAGE: ${#}/${##}
Title:
Size: User
Date:
Rev:
KiCad E.D.A. eeschema 7.0.6
Id: 1/1