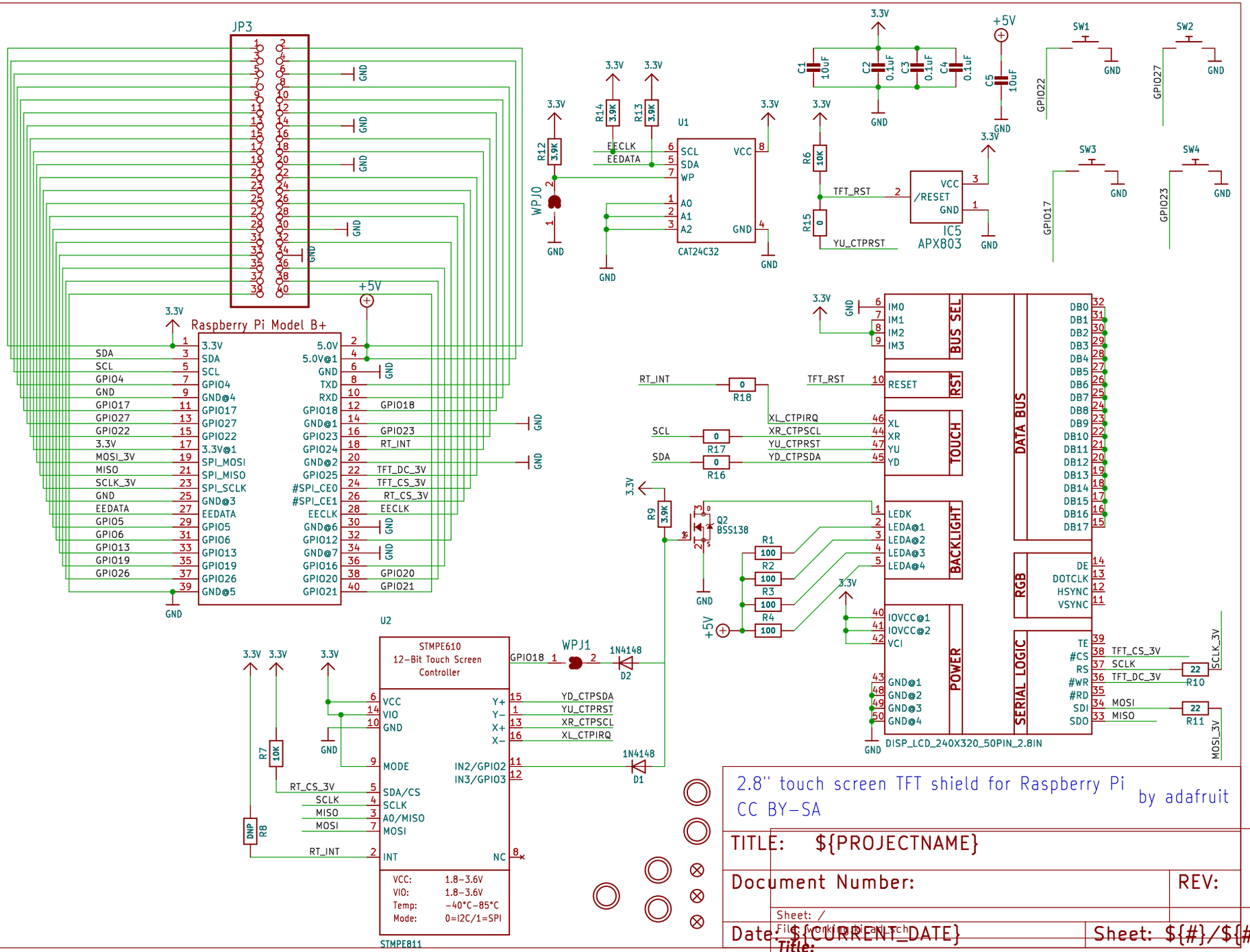
JP3
Raspberry Pi Model B+
U1
CAT24C32
WPJ0
IC5
APX803
SW1
SW2
SW3
SW4
U2
STMPE610
12-Bit Touch Screen Controller
STMPE811
WPJ1
Q2
BSS138
D1
D2
1N4148
DISP_LCD_240X320_50PIN_2.8IN
BUS SEL
RST
TOUCH
BACKLIGHT
POWER
DATA BUS
RGB
SERIAL LOGIC
2.8" touch screen TFT shield for Raspberry Pi
CC BY-SA
by adafruit
TITLE: ${PROJECTNAME}
Document Number:
REV:
Date: ${CURRENT_DATE}
Sheet: ${#}/${##}
Size: User
Date:
Rev:
KiCad E.D.A. eeschema 7.0.6
Id: 1/1