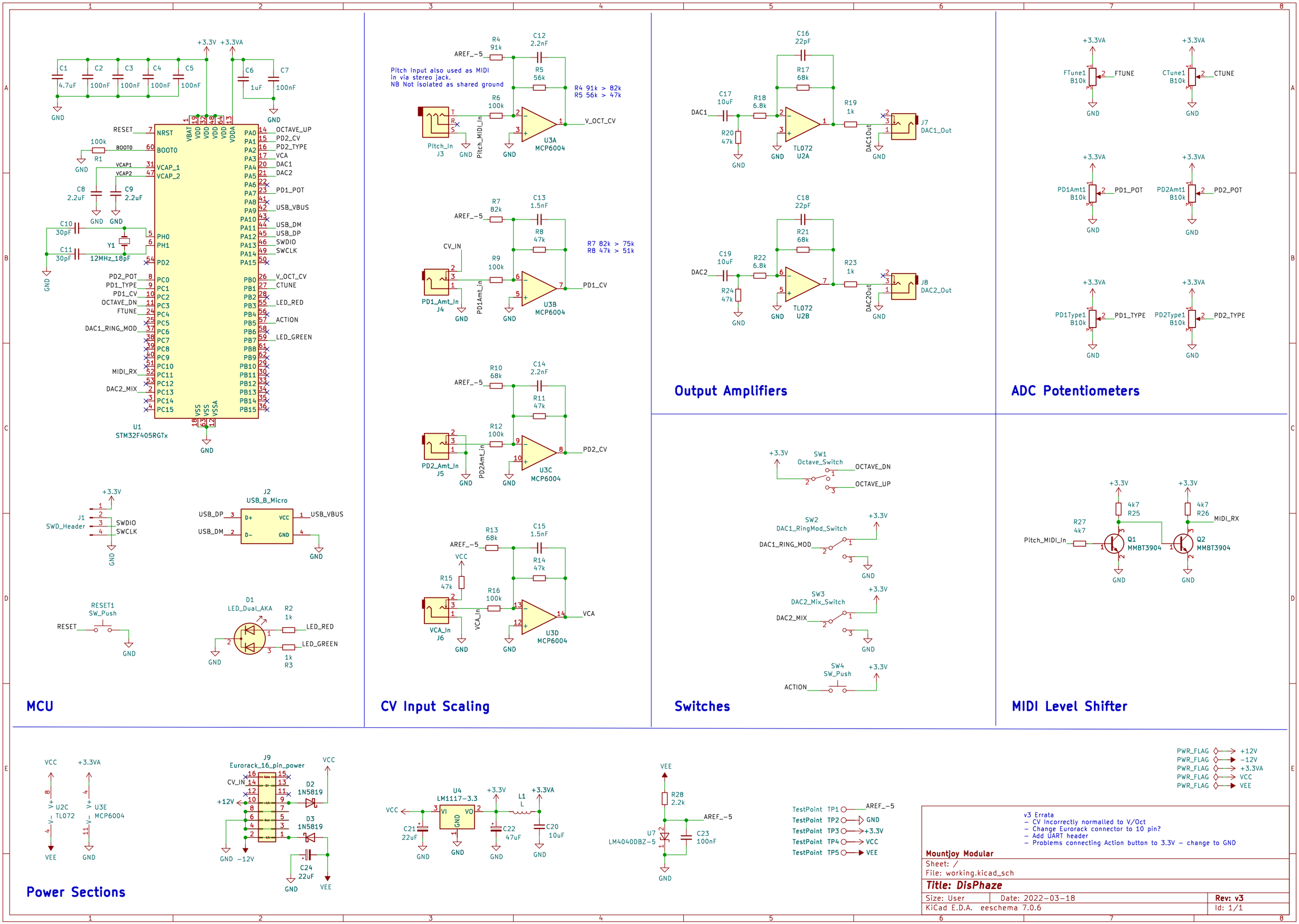
MCU
CV Input Scaling
Output Amplifiers
ADC Potentiometers
Switches
MIDI Level Shifter
Power Sections
U1
STM32F405RGTx
Pitch Input also used as MIDI
in via stereo jack.
NB Not isolated as shared ground
R4 91k > 82k
R5 56k > 47k
R7 82k > 75k
R8 47k > 51k
U3A
MCP6004
U3B
MCP6004
U3C
MCP6004
U3D
MCP6004
TL072
U2A
TL072
U2B
U2C
TL072
U3E
MCP6004
J2
USB_B_Micro
J9
Eurorack_16_pin_power
U4
LM1117-3.3
U7
LM4040DBZ-5
Q1
MMBT3904
Q2
MMBT3904
v3 Errata
– CV Incorrectly normalled to V/Oct
– Change Eurorack connector to 10 pin?
– Add UART header
– Problems connecting Action button to 3.3V – change to GND
Mountjoy Modular
Sheet: /
File: working.kicad_sch
Title: DisPhaze
Size: User
Date: 2022-03-18
Rev: v3
KiCad E.D.A. eeschema 7.0.6
Id: 1/1