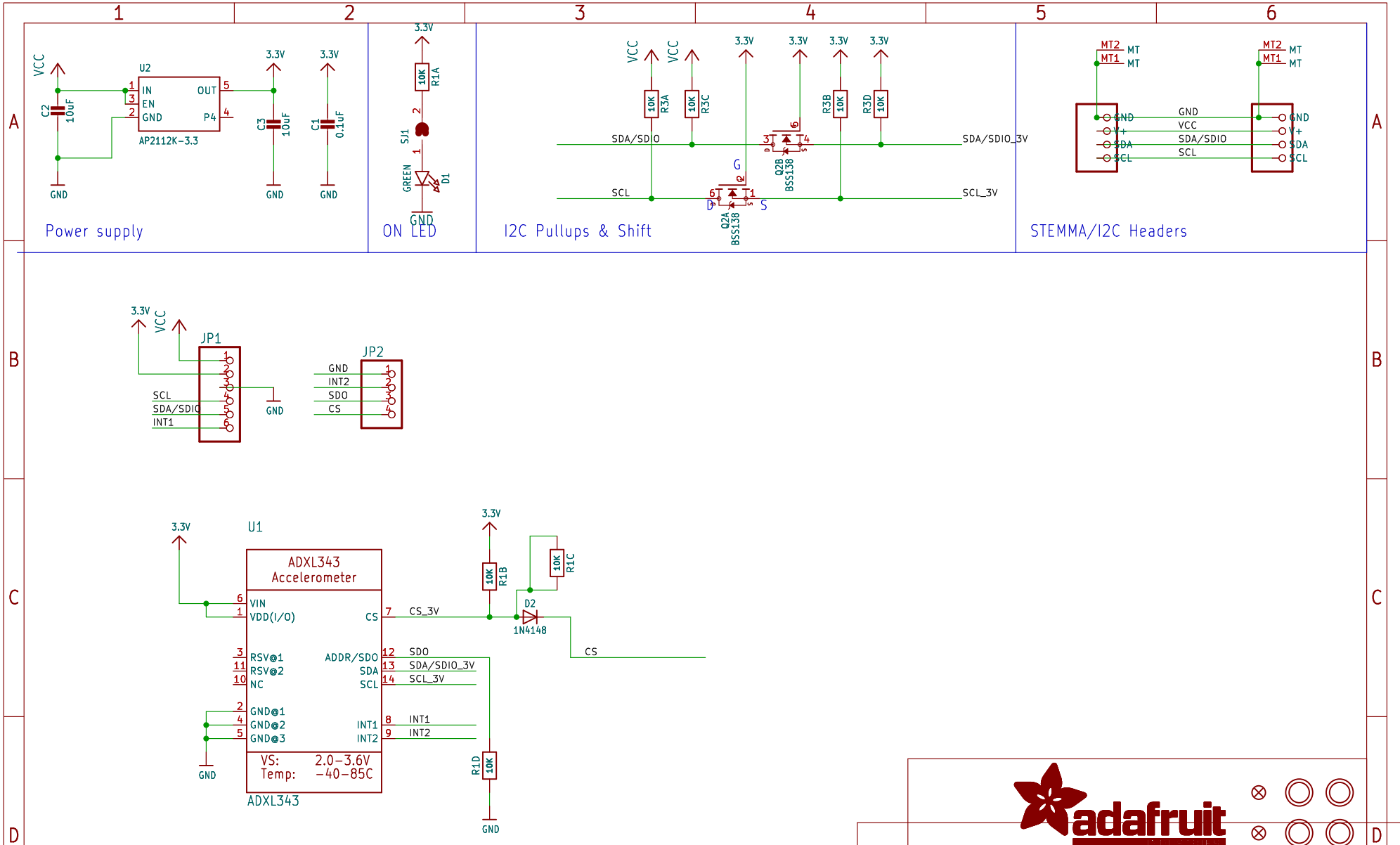
Power supply
VCC
C2
10uF
U2
IN
EN
GND
OUT
P4
AP2112K-3.3
3.3V
C3
10uF
C1
0.1uF
GND
ON LED
R1A
10K
SJ1
GREEN
D1
I2C Pullups & Shift
R3A
R3C
R3B
R3D
SDA/SDIO
SCL
SDA/SDIO_3V
SCL_3V
Q2A
BSS138
Q2B
BSS138
STEMMA/I2C Headers
MT2
MT1
MT
GND
V+
SDA
SCL
VCC
JP1
JP2
INT2
SDO
CS
INT1
U1
ADXL343
Accelerometer
VIN
VDD(I/O)
RSV@1
RSV@2
NC
GND@1
GND@2
GND@3
ADDR/SDO
INT1
INT2
VS: 2.0-3.6V
Temp: -40-85C
CS_3V
R1B
R1C
D2
1N4148
R1D
adafruit
${PROJECTNAME}
${CURRENT_DATE}
Sheet: ${#}/${##}
Drawing: ${AUTHOR}
Adafruit Industries
Sheet: /
File: working.kicad_sch
Title:
Size: User
Date:
Rev:
KiCad E.D.A. eeschema 7.0.6
Id: 1/1