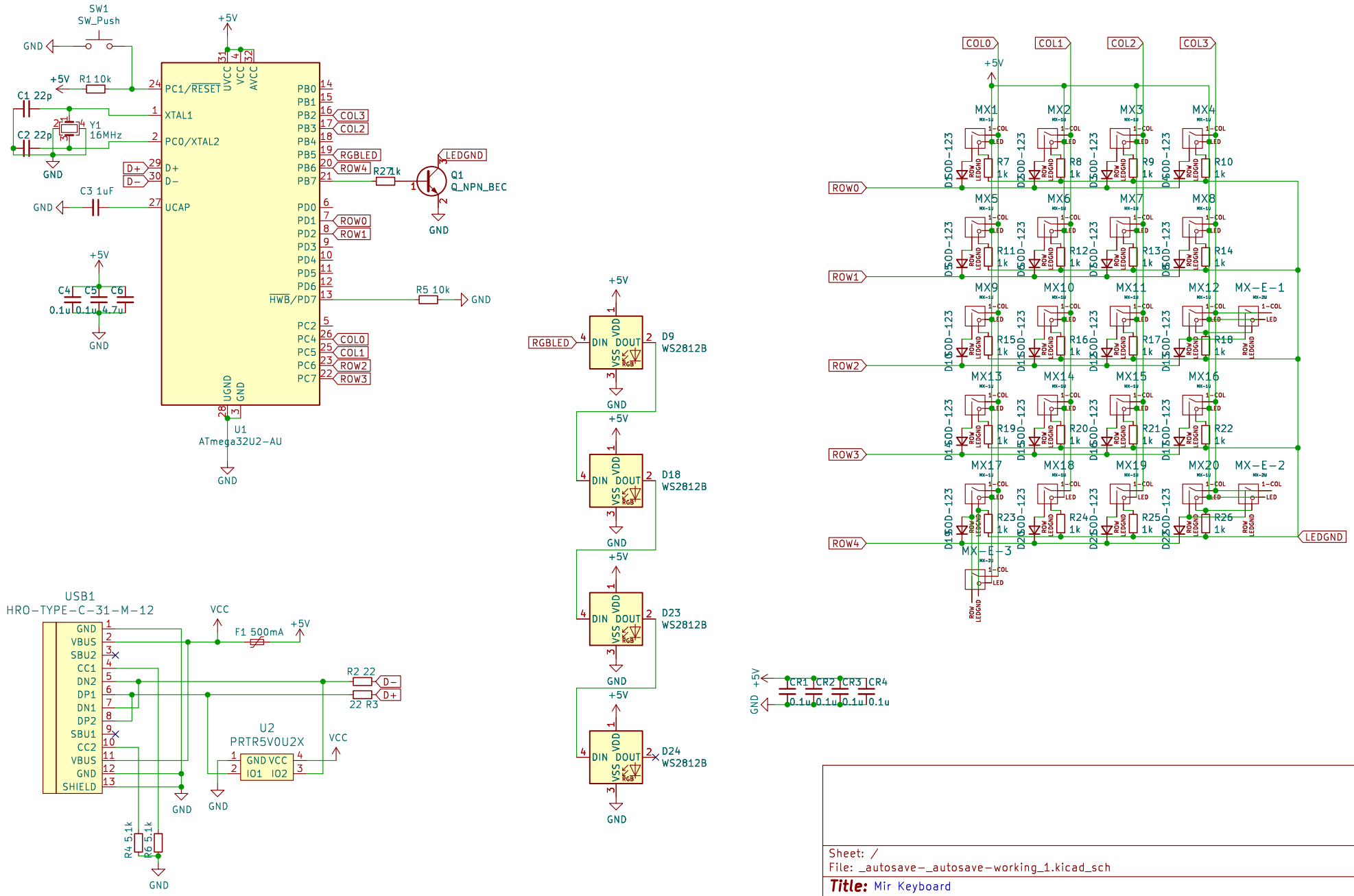

Sheet: /
File: _autosave-_autosave-working_1.kicad_sch

Title: Mir Keyboard

Size: A4	Date: 2018-11-28	Rev: 1.0
KiCad E.D.A. eeschema 7.0.6		Id: 1/1