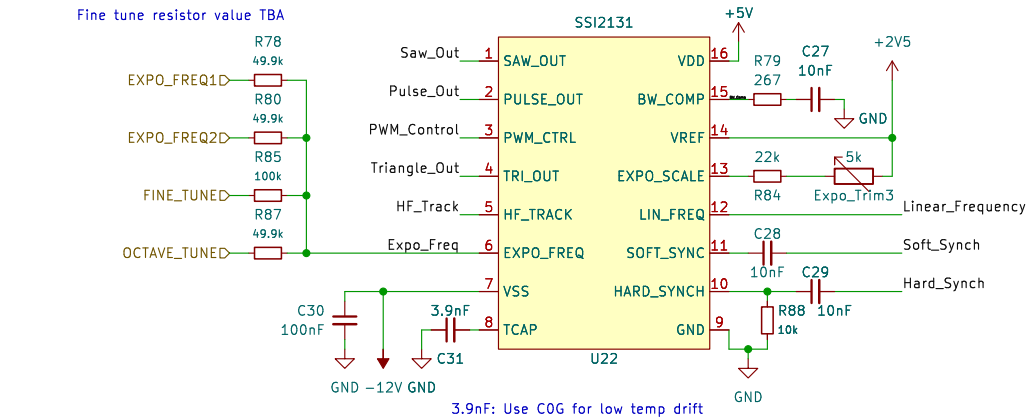

SSI2131 VCO

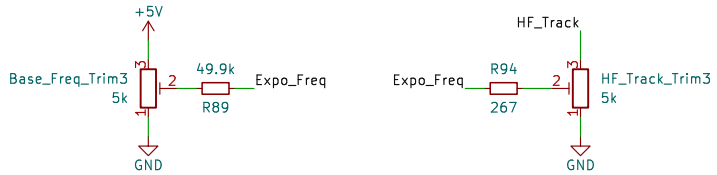

Trimmers

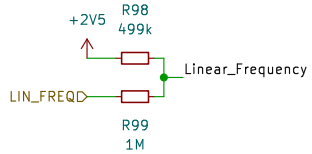

Linear Frequency

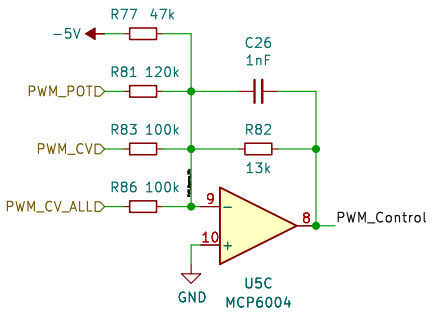

VCO input assume input −10V to +10V:
(−13/100) * +10 + (−13/47) * −5 = 0.08V
(−13/100) * −10 + (−13/47) * −5 = 2.68V

Pot input −12V to +12V:
(−13/120) * +12 + (−13/47) * −5 = 0.08V
(−13/120) * −12 + (−13/47) * −5 = 2.68V

PWM CV Mixer

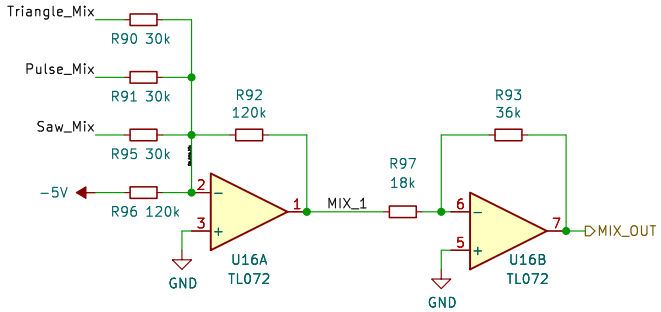

First stage inverts and amplifies to −5V to 5V
(−120/30) * 0 + (−120/120) * −5 = 5V
(−120/30) * 2.5 + (−120/120) * −5 = −5V

2nd stage inverts and amplifies x2
(−36/18) * −5 = +10V
(−36/18) * +5 = −10V

Inverting mixer calculation:
−Vx * (Rfb / Rx)

Output Mixer

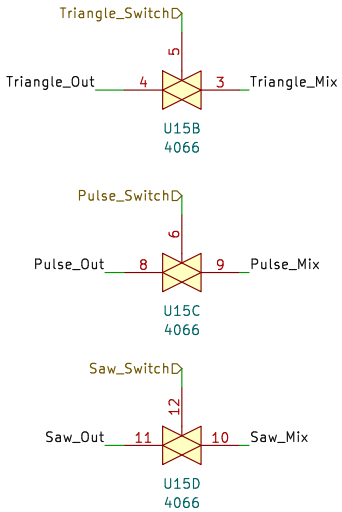

Output Switching

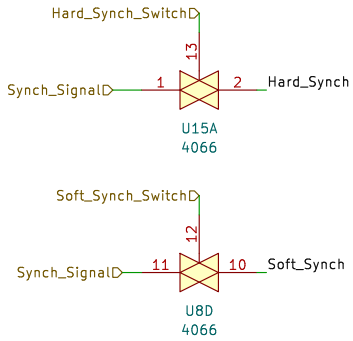

Synch Type Switching

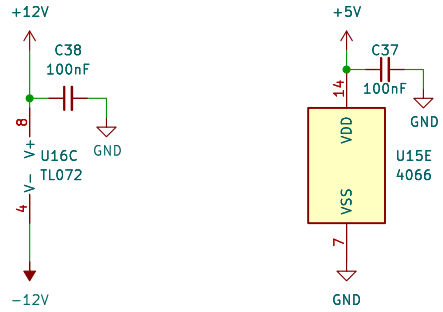

IC Power

Mountjoy Modular

Sheet: /
File: working.kicad_sch

Title: Quadraphone Voice

Size: A4	Date: 2023-01-27	**Rev: v1.0**
KiCad E.D.A. eeschema 7.0.6		Id: 1/1