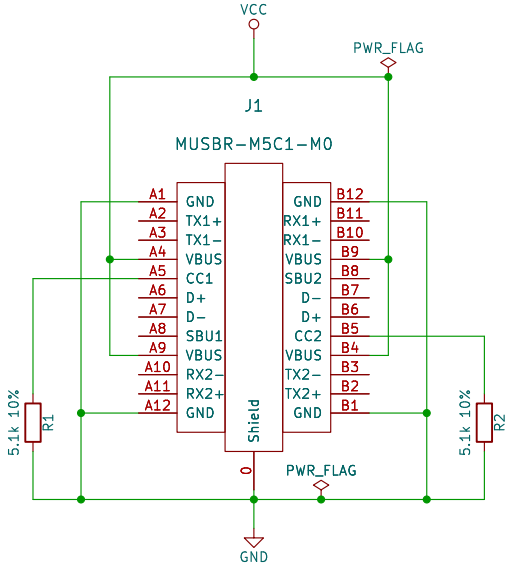

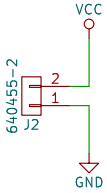

NOT USB-C COMPLIANT – NOT FOR PRODUCTION USE

VEENEMA DESIGN WORKS

Sheet: /

File: working.kicad_sch

Title: USB-C BREAKOUT (SIMPLE)

Size: A4	Date: 2018-04-03	**Rev: A**
KiCad E.D.A. eeschema 7.0.6		Id: 1/1