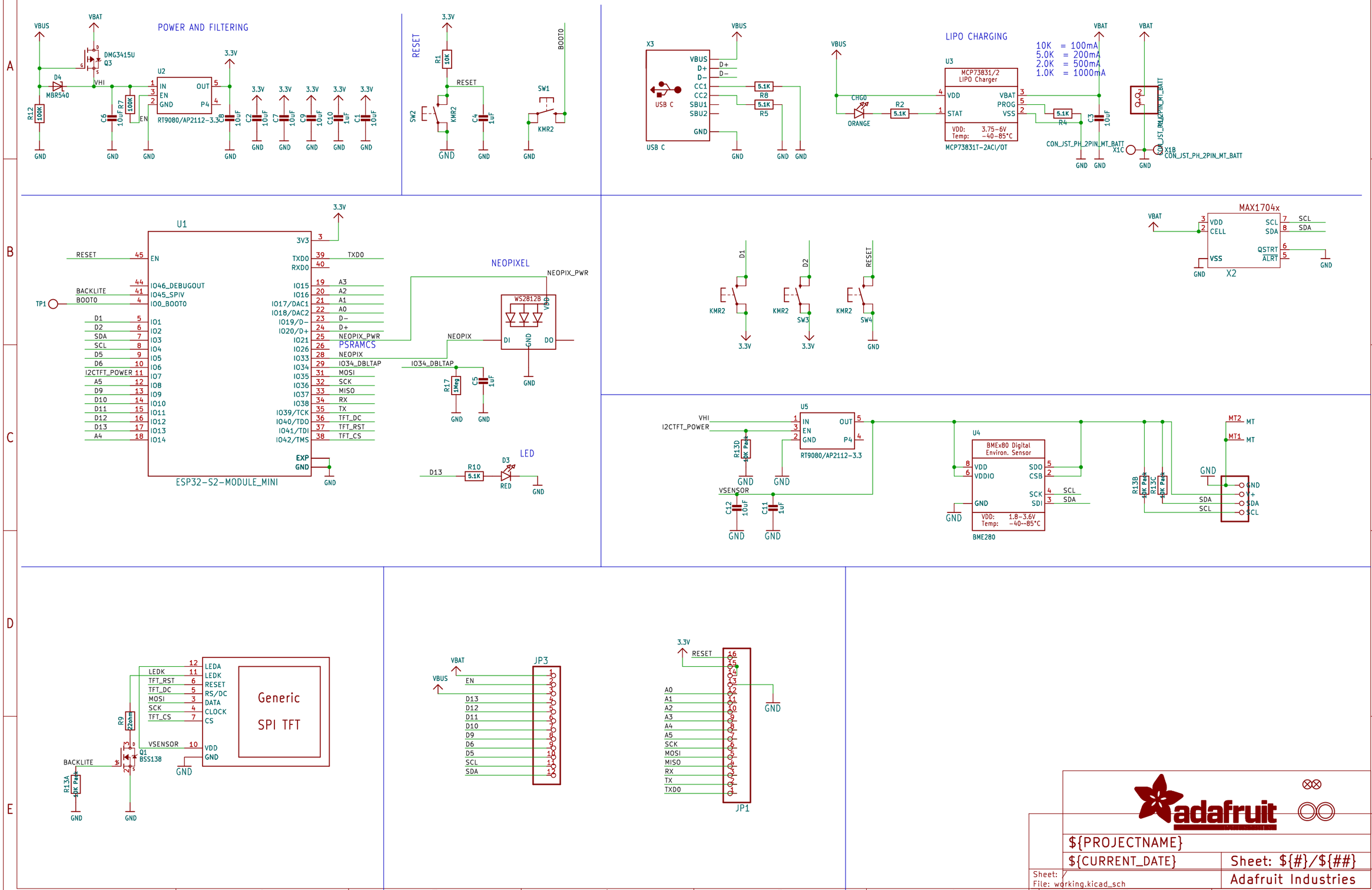
POWER AND FILTERING
VBUS
VBAT
DMG3415U
Q3
D4
MBR540
R12
100K
R7
100K
C6
10uF
U2
IN
EN
GND
OUT
P4
RT9080/AP2112-3.3
3.3V
C8
10uF
C2
10uF
C7
10uF
C9
10uF
C10
1uF
C1
10uF
GND
RESET
R1
10K
SW2
KMR2
C4
1uF
SW1
BOOT0
X3
USB C
VBUS
D+
D-
CC1
CC2
SBU1
SBU2
GND
5.1K
R8
5.1K
R5
LIPO CHARGING
U3
MCP73831/2
LIPO Charger
VDD
STAT
VBAT
PROG
VSS
VDD: 3.75-6V
Temp: -40-85°C
MCP73831T-2ACI/OT
CHGO
ORANGE
R2
5.1K
10K = 100mA
5.0K = 200mA
2.0K = 500mA
1.0K = 1000mA
R4
5.1K
C3
10uF
CON_JST_PH_2PIN_MT_BATT
X1C
X1B
U1
ESP32-S2-MODULE_MINI
EN
3V3
TXD0
RXD0
RESET
BACKLITE
BOOT0
TP1
IO46_DEBUGOUT
IO45_SPIV
IO0_BOOT0
D1
D2
SDA
SCL
D5
D6
I2CTFT_POWER
A5
D9
D10
D11
D12
D13
A4
IO1
IO2
IO3
IO4
IO5
IO6
IO7
IO8
IO9
IO10
IO11
IO12
IO13
IO14
A3
A2
A1
A0
D-
D+
NEOPIX_PWR
NEOPIX
IO34_DBLTAP
MOSI
SCK
MISO
RX
TX
TFT_DC
TFT_RST
TFT_CS
EXP
PSRAMCS
NEOPIXEL
WS2812B
VDD
DI
GND
DO
R17
1Meg
C5
1uF
D13
R10
5.1K
D3
LED
RED
KMR2
SW3
SW4
MAX1704x
VDD
CELL
VSS
SCL
SDA
QSTRT
ALRT
X2
U5
RT9080/AP2112-3.3
VHI
I2CTFT_POWER
R13D
10K Pad
VSENSOR
C12
10uF
C11
1uF
U4
BME280
BMEx80 Digital
Environ. Sensor
VDD
VDDIO
SDO
CSB
SCK
SDI
VDD: 1.8-3.6V
Temp: -40--85°C
R13B
10K Pad
R13C
10K Pad
MT2
MT1
MT
V+
Generic
SPI TFT
LEDA
LEDK
RESET
RS/DC
DATA
CLOCK
CS
VDD
R9
220ohm
Q1
BSS138
R13A
10K Pad
JP3
JP1
adafruit
${PROJECTNAME}
${CURRENT_DATE}
Sheet: ${#}/${##}
Adafruit Industries
Sheet: /
File: working.kicad_sch
Title:
Size: User
Date:
Rev:
KiCad E.D.A. eeschema 7.0.6
Id: 1/1