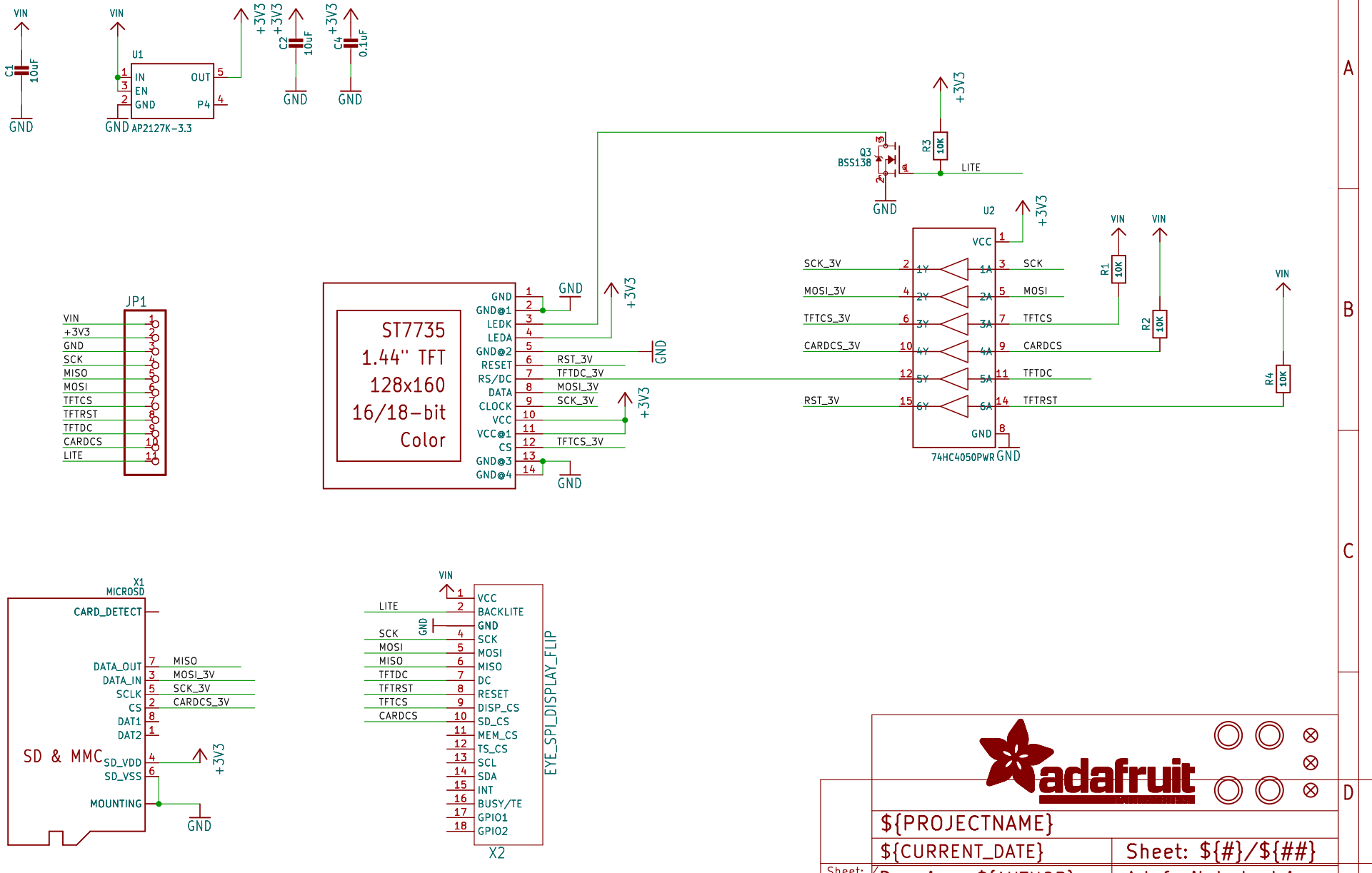
VIN
C1
10uF
GND
U1
IN
EN
GND
OUT
P4
AP2127K-3.3
+3V3
C2
10uF
C4
0.1uF
Q3
BSS138
R3
10K
LITE
U2
VCC
SCK_3V
MOSI_3V
TFTCS_3V
CARDCS_3V
RST_3V
SCK
MOSI
TFTCS
CARDCS
TFTDC
TFTRST
74HC4050PWR
R1
10K
R2
10K
R4
10K
JP1
VIN
+3V3
GND
SCK
MISO
MOSI
TFTCS
TFTRST
TFTDC
CARDCS
LITE
ST7735
1.44" TFT
128x160
16/18-bit
Color
GND
GND@1
LEDK
LEDA
GND@2
RESET
RS/DC
DATA
CLOCK
VCC
VCC@1
CS
GND@3
GND@4
RST_3V
TFTDC_3V
MOSI_3V
SCK_3V
TFTCS_3V
X1
MICROSD
CARD_DETECT
DATA_OUT
DATA_IN
SCLK
CS
DAT1
DAT2
SD & MMC
SD_VDD
SD_VSS
MOUNTING
MISO
MOSI_3V
SCK_3V
CARDCS_3V
X2
EYE_SPI_DISPLAY_FLIP
BACKLITE
DC
DISP_CS
SD_CS
MEM_CS
TS_CS
SCL
SDA
INT
BUSY/TE
GPIO1
GPIO2
${PROJECTNAME}
${CURRENT_DATE}
Sheet: ${#}/${##}
Drawing: ${AUTHOR}
Adafruit Industries
Title:
Size: User
Date:
Rev:
KiCad E.D.A. eeschema 7.0.6
Id: 1/1