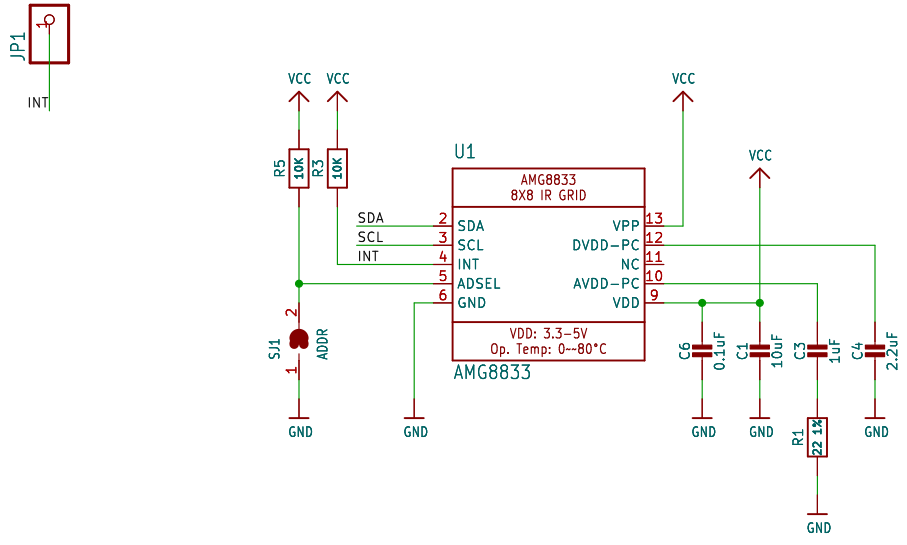

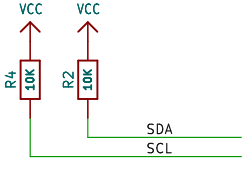

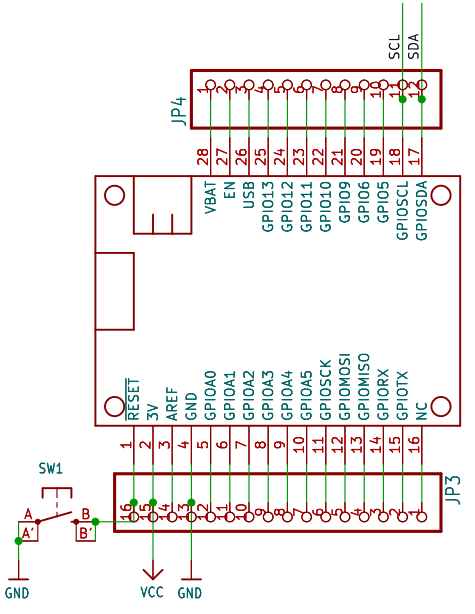

adafruit

${PROJECTNAME}

${CURRENT_DATE} | Sheet: ${#}/${##}

Sheet: /
File: working.kicad_sch

Drawing: ${AUTHOR} | Adafruit Industries

Title:

Size: User | Date: | Rev:

KiCad E.D.A. eeschema 7.0.6 | Id: 1/1