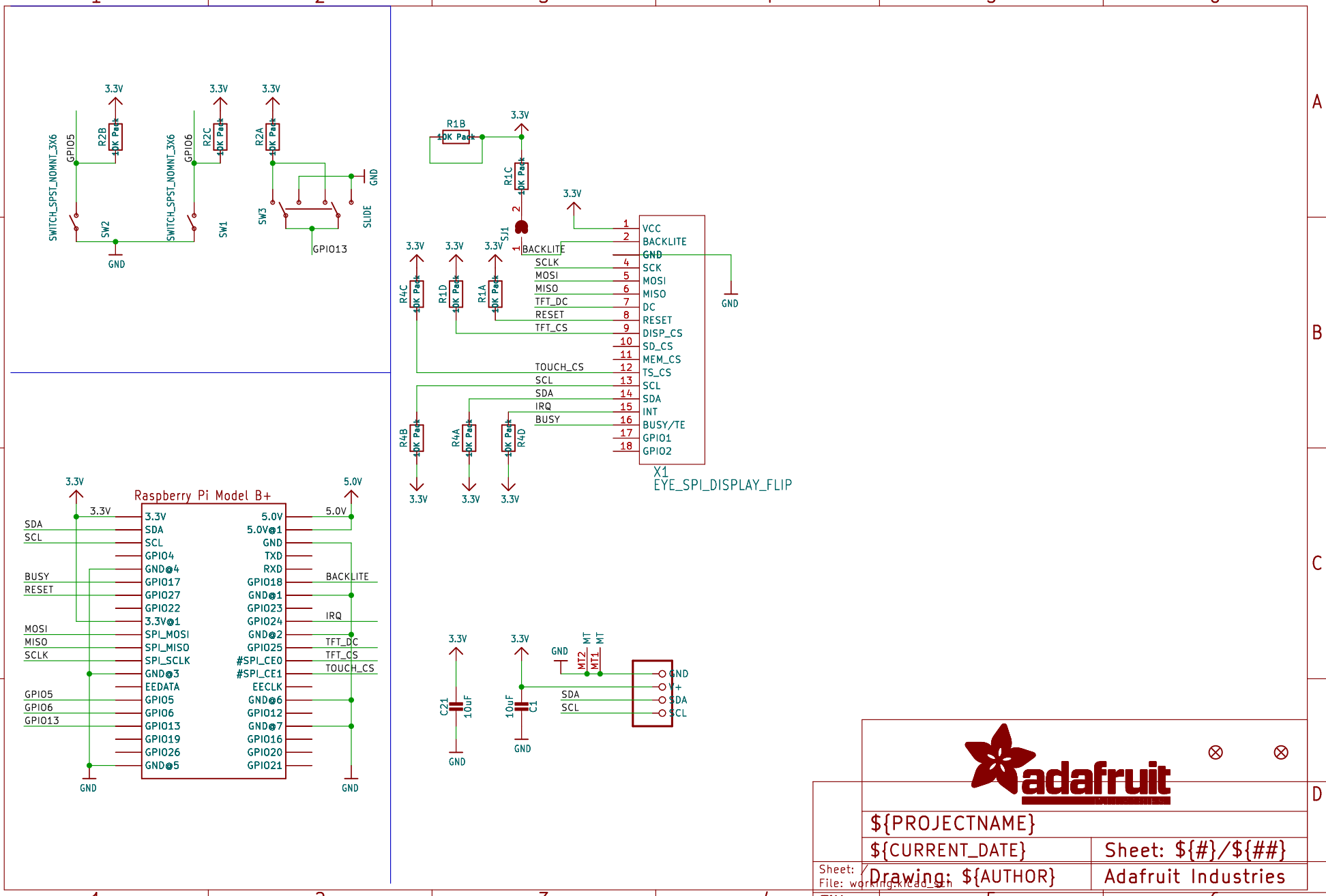
3.3V
R2B
10K Pack
GPIO5
SWITCH_SPST_NOMNT_3X6
SW2
GND
R2C
10K Pack
GPIO6
SW1
R2A
10K Pack
SW3
GND
SLIDE
GPIO13
R1B
10K Pack
R1C
10K Pack
S1
BACKLITE
R4C
R1D
R1A
R4B
R4A
R4D
VCC
BACKLITE
GND
SCK
MOSI
MISO
DC
RESET
DISP_CS
SD_CS
MEM_CS
TS_CS
SCL
SDA
INT
BUSY/TE
GPIO1
GPIO2
SCLK
TFT_DC
TFT_CS
TOUCH_CS
IRQ
BUSY
X1
EYE_SPI_DISPLAY_FLIP
Raspberry Pi Model B+
5.0V
3.3V
GND
SDA
SCL
BUSY
RESET
MOSI
MISO
SCLK
GPIO5
GPIO6
GPIO13
BACKLITE
IRQ
TFT_DC
TFT_CS
TOUCH_CS
C21
10uF
C1
MT2
MT1
MT
V+
adafruit
${PROJECTNAME}
${CURRENT_DATE}
Sheet: ${#}/${##}
Drawing: ${AUTHOR}
Adafruit Industries
Sheet: /
File: working.kicad_sch
Title:
Size: User
Date:
Rev:
KiCad E.D.A. eeschema 7.0.6
Id: 1/1