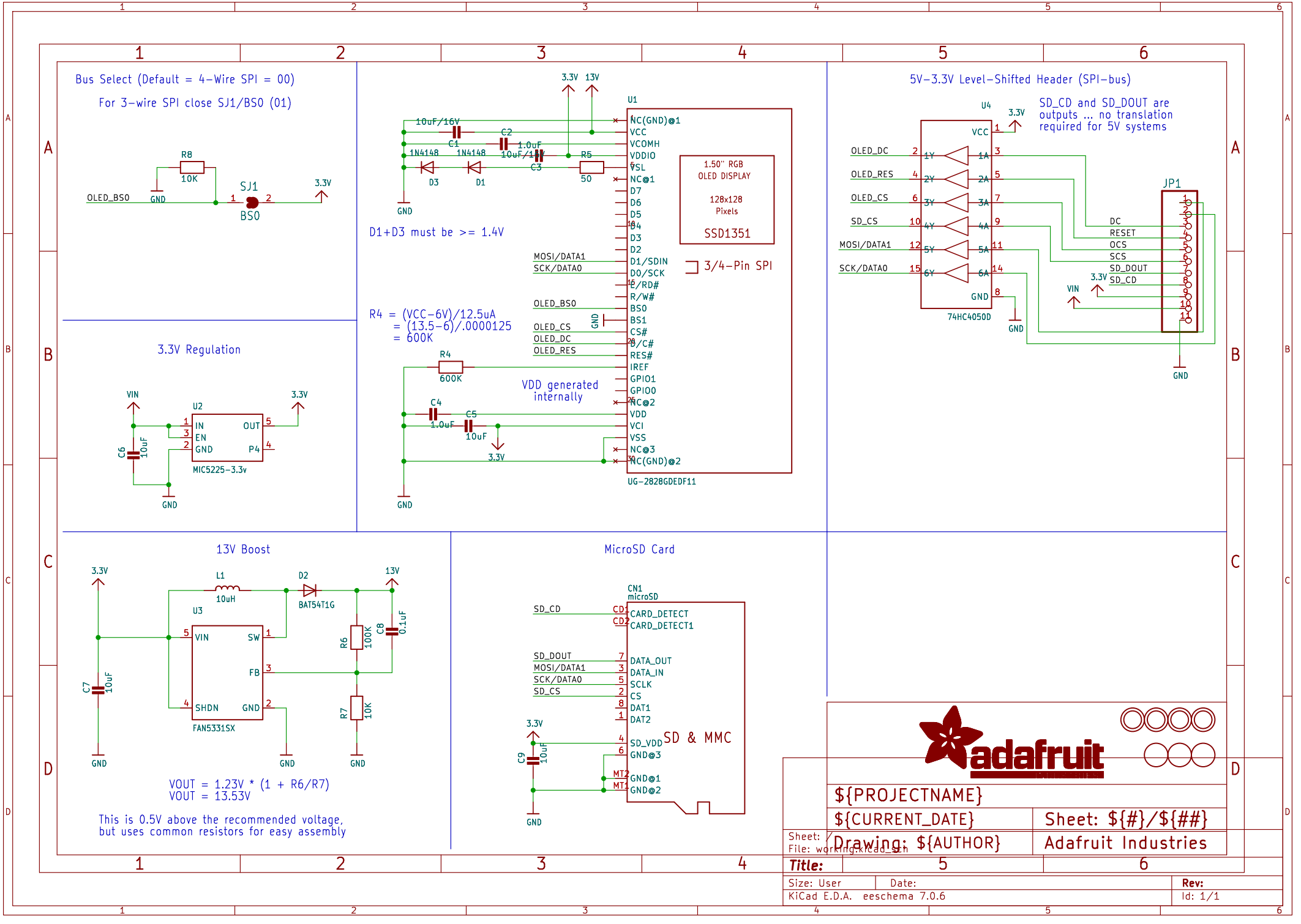
Bus Select (Default = 4-Wire SPI = 00)
For 3-wire SPI close SJ1/BS0 (01)
R8
10K
OLED_BS0
GND
SJ1
BS0
3.3V
3.3V Regulation
VIN
U2
IN
EN
GND
OUT
P4
MIC5225-3.3v
C6
10uF
13V Boost
L1
10uH
D2
BAT54T1G
U3
VIN
SW
FB
SHDN
GND
FAN5331SX
C7
10uF
R6
100K
C8
0.1uF
R7
10K
13V
VOUT = 1.23V * (1 + R6/R7)
VOUT = 13.53V
This is 0.5V above the recommended voltage,
but uses common resistors for easy assembly
U1
10uF/16V
C1
C2
1.0uF
1N4148
1N4148
10uF/16V
C3
R5
50
D3
D1
D1+D3 must be >= 1.4V
NC(GND)@1
VCC
VCOMH
VDDIO
VSL
NC@1
D7
D6
D5
D4
D3
D2
D1/SDIN
D0/SCK
E/RD#
R/W#
BS0
BS1
CS#
D/C#
RES#
IREF
GPIO1
GPIO0
NC@2
VDD
VCI
VSS
NC@3
NC(GND)@2
MOSI/DATA1
SCK/DATA0
OLED_BS0
OLED_CS
OLED_DC
OLED_RES
1.50" RGB
OLED DISPLAY
128x128
Pixels
SSD1351
3/4-Pin SPI
R4 = (VCC-6V)/12.5uA
= (13.5-6)/.0000125
= 600K
R4
600K
VDD generated
internally
C4
1.0uF
C5
10uF
UG-2828GDEDF11
5V-3.3V Level-Shifted Header (SPI-bus)
U4
SD_CD and SD_DOUT are
outputs ... no translation
required for 5V systems
OLED_DC
OLED_RES
OLED_CS
SD_CS
MOSI/DATA1
SCK/DATA0
VCC
GND
74HC4050D
JP1
DC
RESET
OCS
SCS
SD_DOUT
SD_CD
VIN
MicroSD Card
CN1
microSD
SD_CD
CD1
CD2
CARD_DETECT
CARD_DETECT1
SD_DOUT
MOSI/DATA1
SCK/DATA0
SD_CS
DATA_OUT
DATA_IN
SCLK
CS
DAT1
DAT2
SD_VDD
GND@3
GND@1
GND@2
MT2
MT1
SD & MMC
C9
10uF
${PROJECTNAME}
${CURRENT_DATE}
Sheet: ${#}/${##}
Drawing: ${AUTHOR}
Adafruit Industries
Sheet: /
File: working.kicad_sch
Title:
Size: User
Date:
Rev:
KiCad E.D.A. eeschema 7.0.6
Id: 1/1