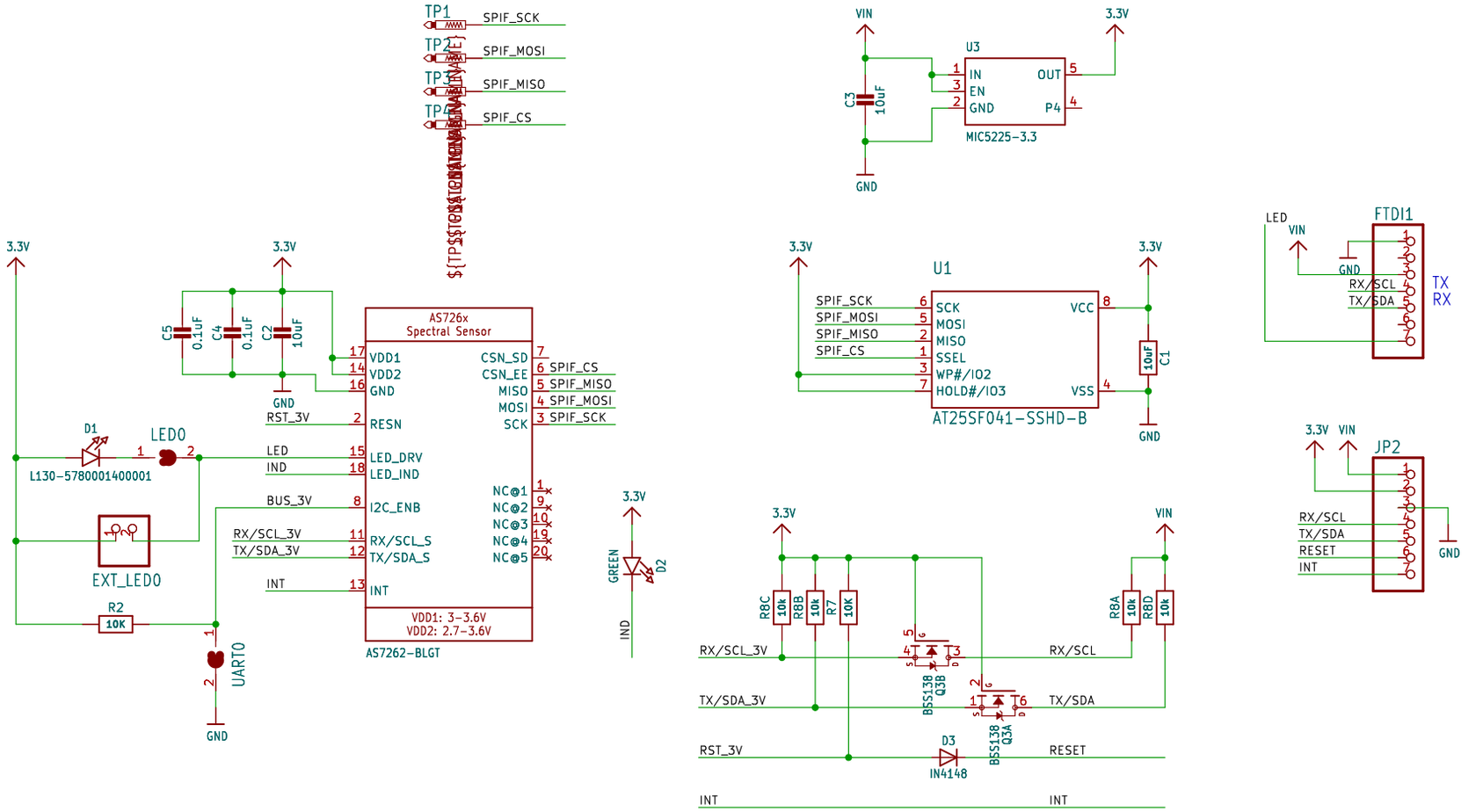


| | | |
|---|---|---|
| ISSUE | ${COMPANY} | © 2015 |
| DRAWN ${DRAWN} | TITLE | REV ${REV} |
| CHECKED ${CHECKED} | DATE ${CURRENT_DATE} | DRG № ${DRGNO} |
| DATE ${DATE} | FILE: ${PROJECTNAME} | PAGE: ${#}/${##} |

Sheet: /
File: workion.kicad_sch

Title:

Size: User | Date: | Rev:

KiCad E.D.A. eeschema 7.0.6 | Id: 1/1