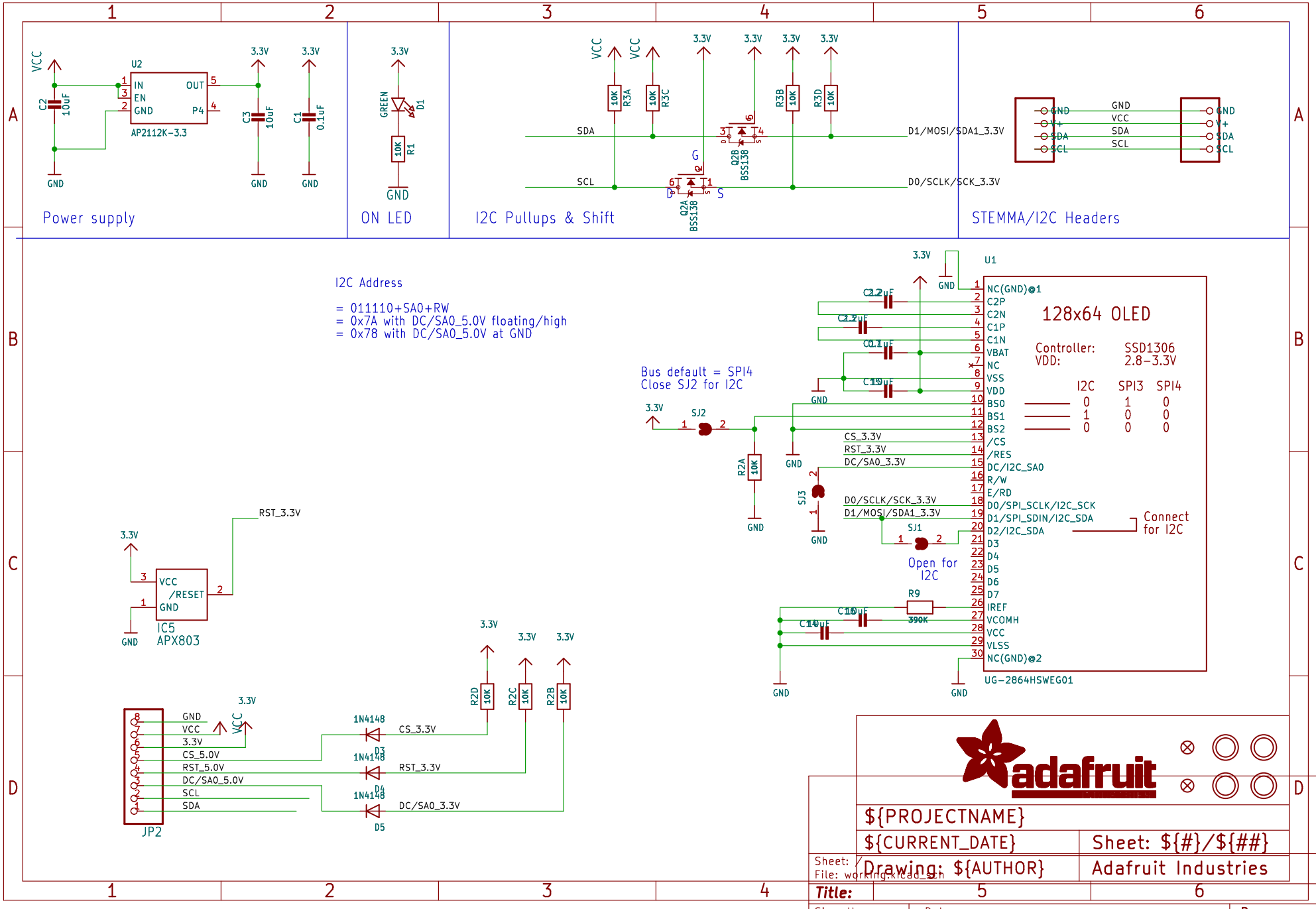
Power supply
U2
AP2112K-3.3
IN
EN
GND
OUT
P4
VCC
3.3V
C2 10uF
C3 10uF
C1 0.1uF
GND
ON LED
GREEN
D1
R1 10K
I2C Pullups & Shift
R3A 10K
R3C 10K
R3B 10K
R3D 10K
SDA
SCL
D1/MOSI/SDA1_3.3V
D0/SCLK/SCK_3.3V
Q2A BSS138
Q2B BSS138
STEMMA/I2C Headers
GND
VCC
SDA
SCL
I2C Address
= 011110+SA0+RW
= 0x7A with DC/SA0_5.0V floating/high
= 0x78 with DC/SA0_5.0V at GND
Bus default = SPI4
Close SJ2 for I2C
SJ2
R2A 10K
SJ3
SJ1
Open for I2C
Connect for I2C
U1
128x64 OLED
Controller: SSD1306
VDD: 2.8-3.3V
I2C SPI3 SPI4
BS0 0 1 0
BS1 1 0 0
BS2 0 0 0
NC(GND)@1
C2P
C2N
C1P
C1N
VBAT
NC
VSS
VDD
BS0
BS1
BS2
/CS
/RES
DC/I2C_SA0
R/W
E/RD
D0/SPI_SCLK/I2C_SCK
D1/SPI_SDIN/I2C_SDA
D2/I2C_SDA
D3
D4
D5
D6
D7
IREF
VCOMH
VCC
VLSS
NC(GND)@2
CS_3.3V
RST_3.3V
DC/SA0_3.3V
R9 390K
C10 1uF
C11 1uF
UG-2864HSWEG01
IC5
APX803
VCC
/RESET
GND
RST_3.3V
JP2
GND
VCC
3.3V
CS_5.0V
RST_5.0V
DC/SA0_5.0V
SCL
SDA
1N4148
D3
D4
D5
R2D 10K
R2C 10K
R2B 10K
adafruit
${PROJECTNAME}
${CURRENT_DATE}
Sheet: ${#}/${##}
Drawing: ${AUTHOR}
Adafruit Industries
Title:
Size: User
Date:
Rev:
KiCad E.D.A. eeschema 7.0.6
Id: 1/1