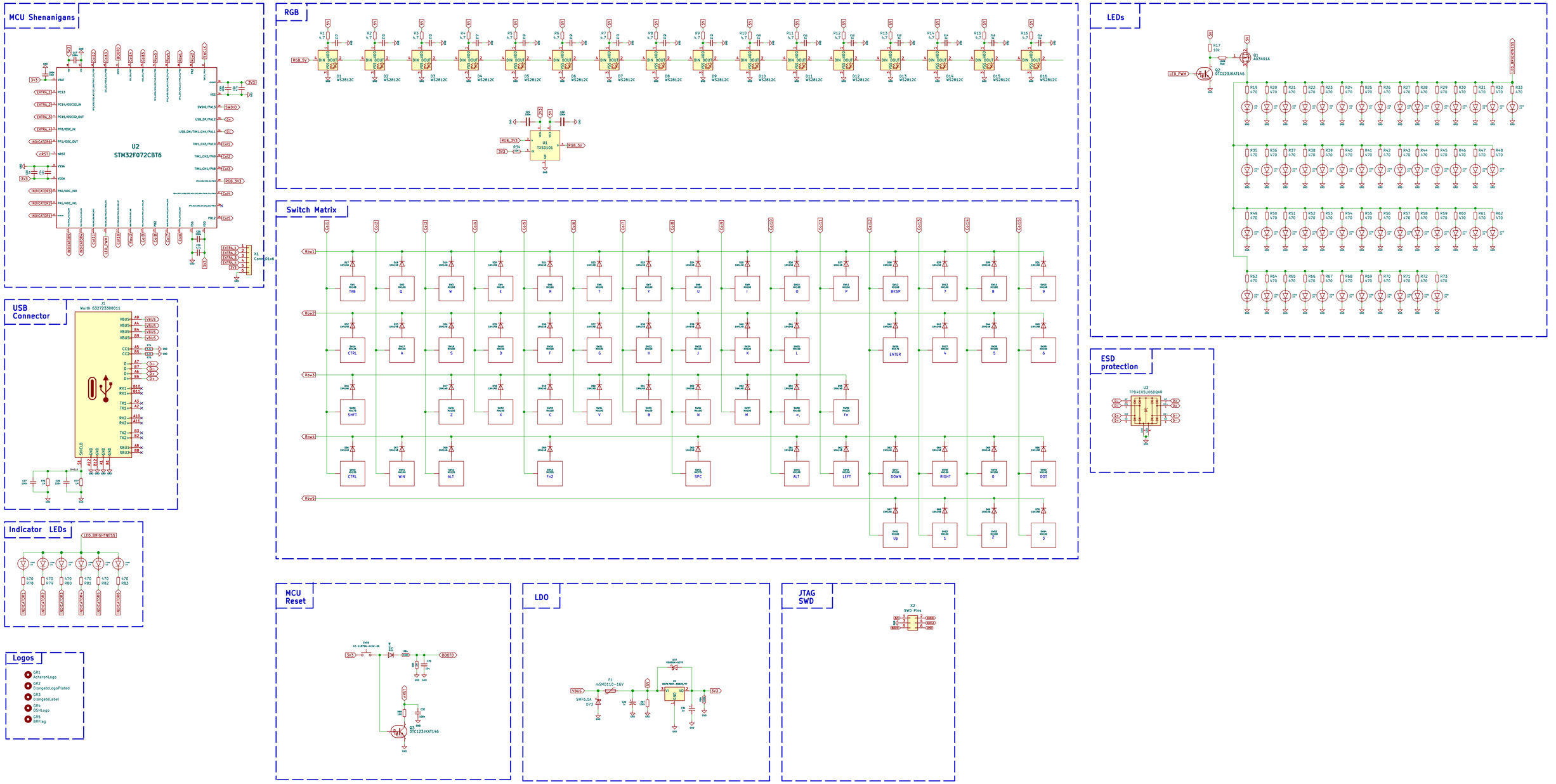

In partnership with MrKeebs and 159

Designed by Gondolindrim

Sheet: /

File: working.kicad_sch

Title: ElongatePCB

Size: A1	Date: 2021-07-01	**Rev: pre-Delta-rc2**
KiCad E.D.A. eeschema 7.0.6		Id: 1/1