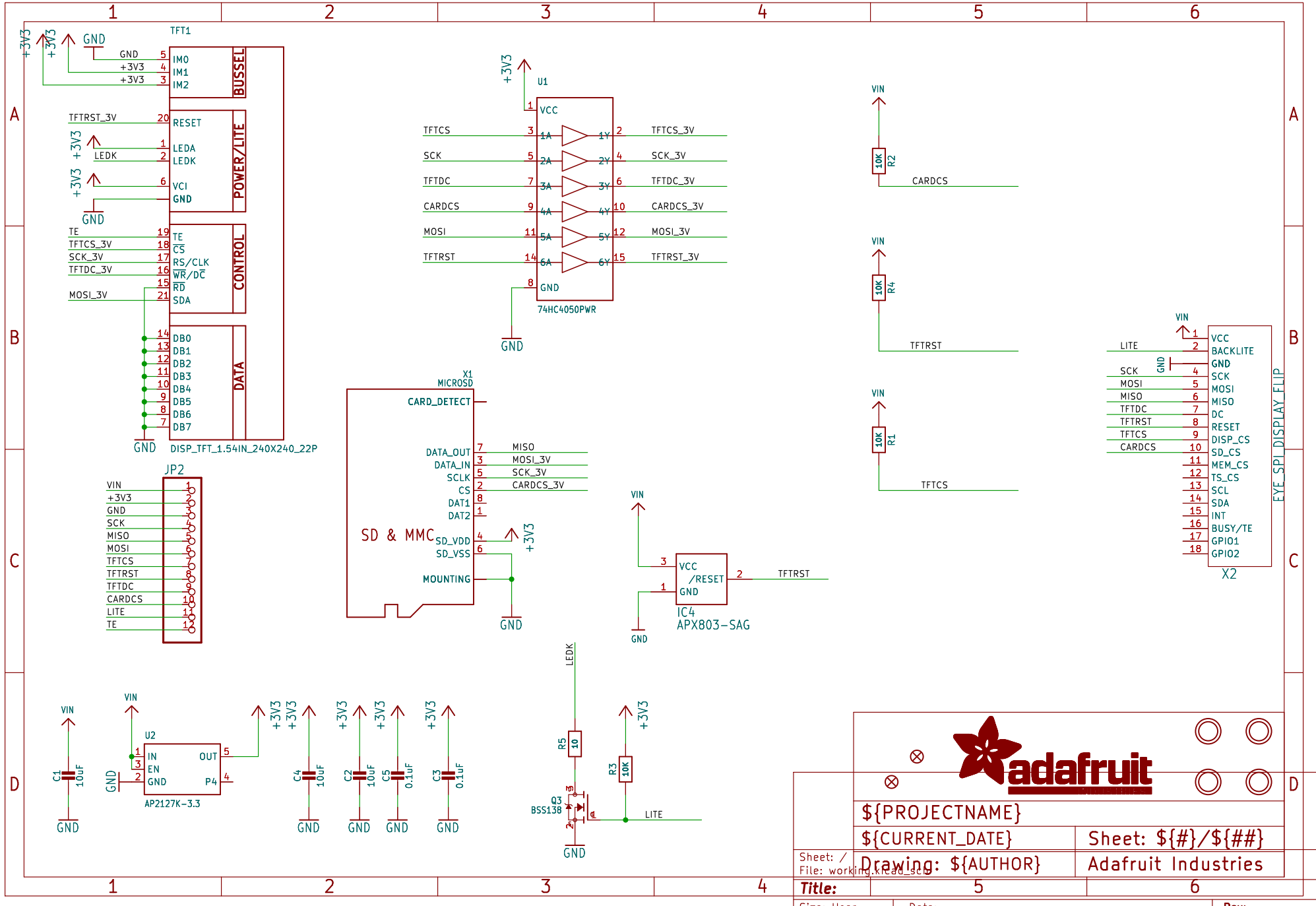
TFT1
DISP_TFT_1.54IN_240X240_22P
BUSSEL
POWER/LITE
CONTROL
DATA
IM0
IM1
IM2
RESET
LEDA
LEDK
VCI
GND
TE
CS
RS/CLK
WR/DC
RD
SDA
DB0
DB1
DB2
DB3
DB4
DB5
DB6
DB7
U1
74HC4050PWR
TFTCS
SCK
TFTDC
CARDCS
MOSI
TFTRST
TFTCS_3V
SCK_3V
TFTDC_3V
CARDCS_3V
MOSI_3V
TFTRST_3V
R2
R4
R1
10K
X1
MICROSD
CARD_DETECT
DATA_OUT
DATA_IN
SCLK
CS
DAT1
DAT2
SD_VDD
SD_VSS
MOUNTING
SD & MMC
MISO
CARDCS_3V
JP2
VIN
+3V3
GND
SCK
MISO
MOSI
TFTCS
TFTRST
TFTDC
CARDCS
LITE
TE
IC4
APX803-SAG
VCC
/RESET
X2
EYE_SPI_DISPLAY_FLIP
BACKLITE
DC
DISP_CS
SD_CS
MEM_CS
TS_CS
SCL
SDA
INT
BUSY/TE
GPIO1
GPIO2
U2
AP2127K-3.3
IN
EN
OUT
P4
C1
10uF
C4
C2
C5
0.1uF
C3
R5
R3
Q3
BSS138
LEDK
adafruit
${PROJECTNAME}
${CURRENT_DATE}
Sheet: ${#}/${##}
Drawing: ${AUTHOR}
Adafruit Industries
Sheet: /
File: working.kicad_sch
Title:
Size: User
Date:
Rev:
KiCad E.D.A. eeschema 7.0.6
Id: 1/1