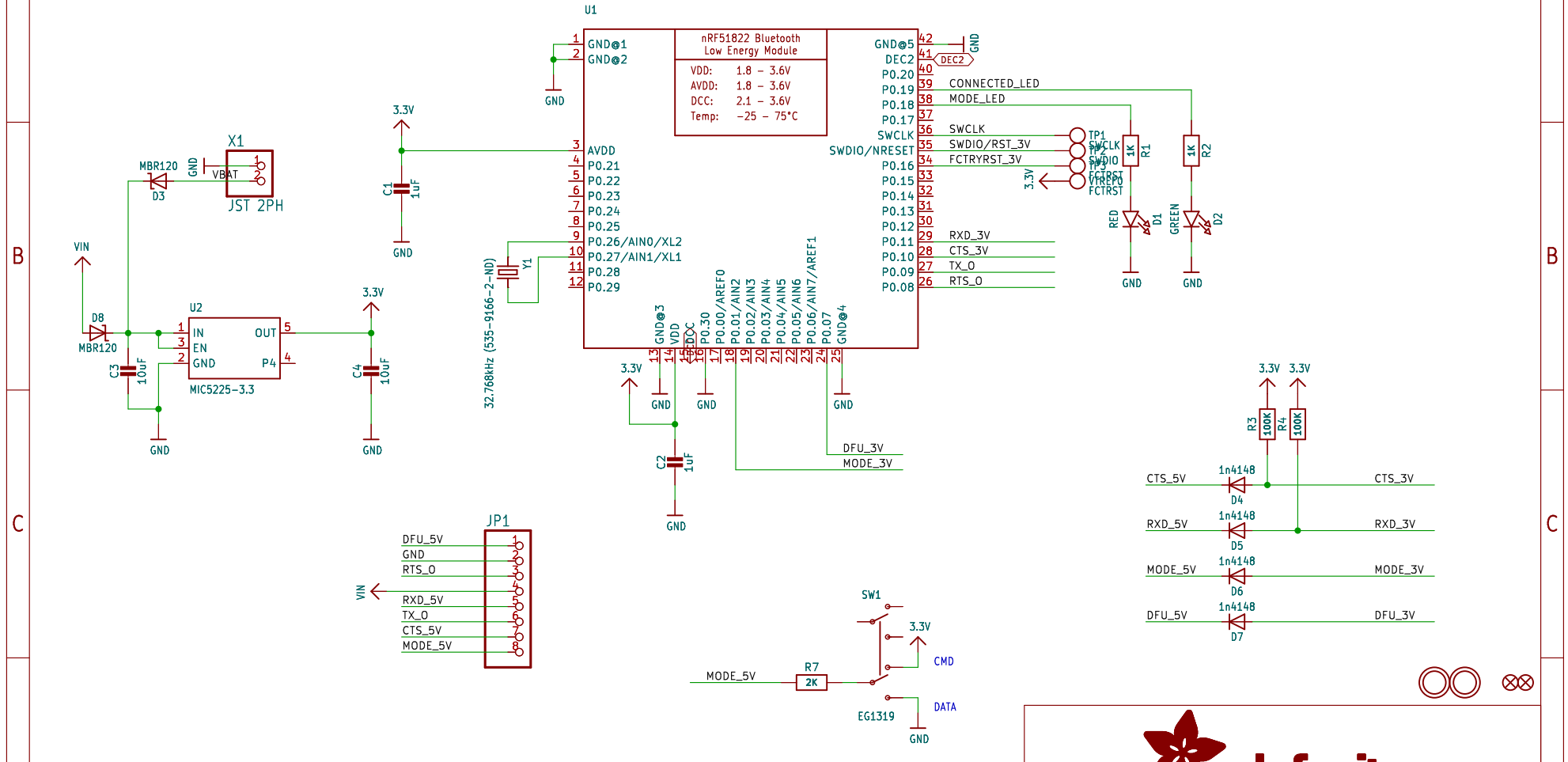

To control MODE in SW (using the MODE_5V pin) set SW1 high (to CMD), which allows MODE_5V to change mode by setting it directly to GND or VIN

${PROJECTNAME}

${CURRENT_DATE} | Sheet: ${#}/${##}

Sheet: / Drawing: ${AUTHOR} | Adafruit Industries

File: working.kicad_sch

Title:

Size: User | Date: | Rev:

KiCad E.D.A. eeschema 7.0.6 | Id: 1/1