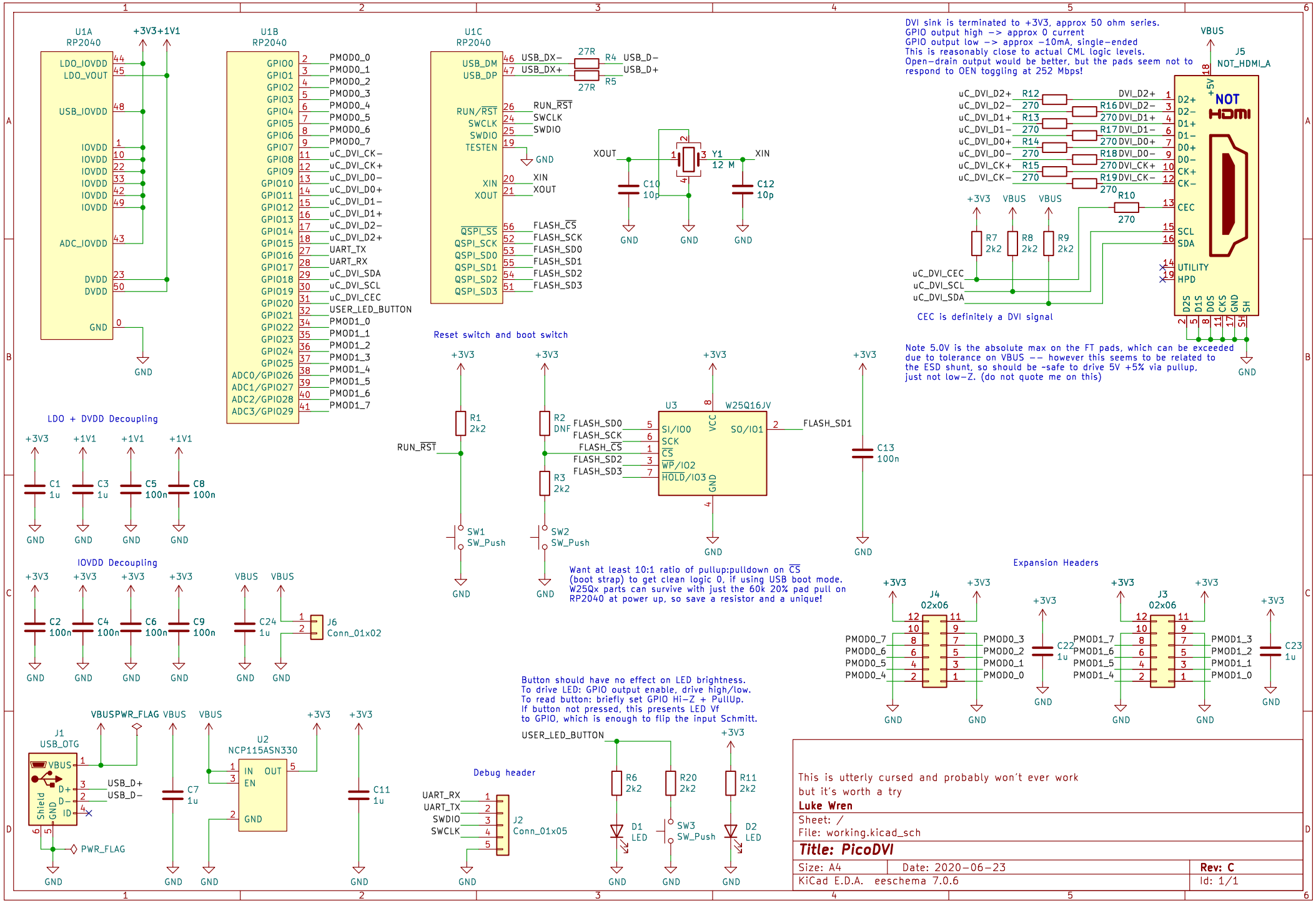

This is utterly cursed and probably won't ever work
but it's worth a try

Luke Wren

Sheet: /
File: working.kicad_sch

Title: PicoDVI

Size: A4	Date: 2020−06−23	Rev: C
KiCad E.D.A. eeschema 7.0.6		Id: 1/1