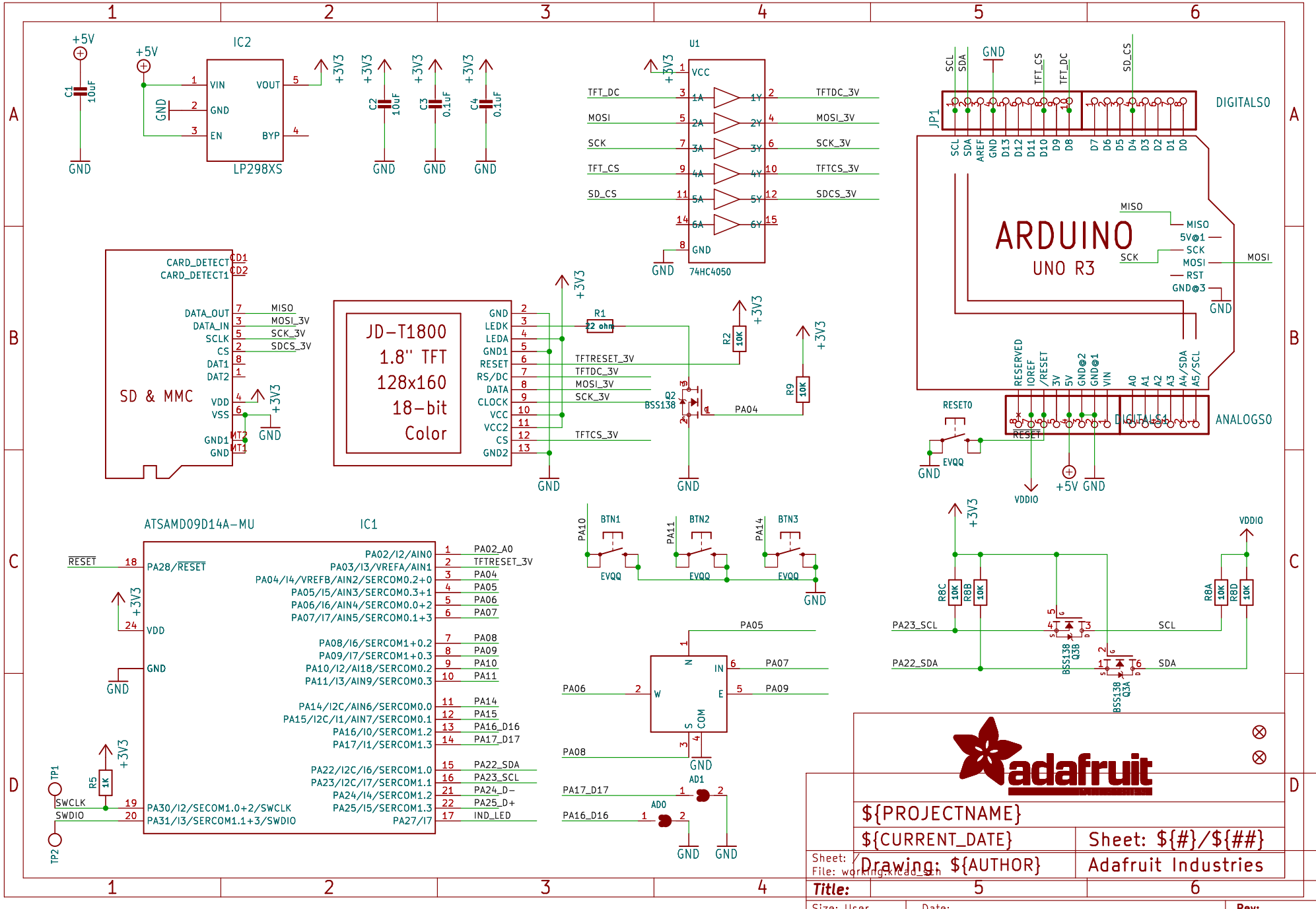
IC2
LP298XS
VIN
GND
EN
VOUT
BYP
U1
74HC4050
VCC
1A
2A
3A
4A
5A
6A
1Y
2Y
3Y
4Y
5Y
6Y
TFT_DC
MOSI
SCK
TFT_CS
SD_CS
TFTDC_3V
MOSI_3V
SCK_3V
TFTCS_3V
SDCS_3V
JP1
DIGITALS0
ARDUINO
UNO R3
ANALOGS0
DIGITALS1
RESET0
EVQQ
VDDIO
SD & MMC
CARD_DETECT
CARD_DETECT1
DATA_OUT
DATA_IN
SCLK
CS
DAT1
DAT2
VDD
VSS
GND1
GND
MISO
MOSI_3V
SCK_3V
SDCS_3V
JD-T1800
1.8" TFT
128x160
18-bit
Color
LEDK
LEDA
GND1
RESET
RS/DC
DATA
CLOCK
VCC
VCC2
GND2
TFTRESET_3V
TFTDC_3V
MOSI_3V
SCK_3V
TFTCS_3V
R1
22 ohm
R2
10K
R9
10K
Q2
BSS138
PA04
ATSAMD09D14A-MU
IC1
RESET
PA28/RESET
VDD
GND
PA02/I2/AIN0
PA03/I3/VREFA/AIN1
PA04/I4/VREFB/AIN2/SERCOM0.2+0
PA05/I5/AIN3/SERCOM0.3+1
PA06/I6/AIN4/SERCOM0.0+2
PA07/I7/AIN5/SERCOM0.1+3
PA08/I6/SERCOM1+0.2
PA09/I7/SERCOM1+0.3
PA10/I2/AI18/SERCOM0.2
PA11/I3/AIN9/SERCOM0.3
PA14/I2C/AIN6/SERCOM0.0
PA15/I2C/I1/AIN7/SERCOM0.1
PA16/I0/SERCOM1.2
PA17/I1/SERCOM1.3
PA22/I2C/I6/SERCOM1.0
PA23/I2C/I7/SERCOM1.1
PA24/I4/SERCOM1.2
PA25/I5/SERCOM1.3
PA27/I7
PA30/I2/SECOM1.0+2/SWCLK
PA31/I3/SERCOM1.1+3/SWDIO
PA02_A0
PA04
PA05
PA07
PA08
PA09
PA10
PA11
PA14
PA15
PA16_D16
PA17_D17
PA22_SDA
PA23_SCL
PA24_D-
PA25_D+
IND_LED
SWCLK
SWDIO
TP1
TP2
R5
1K
BTN1
BTN2
BTN3
AD0
AD1
R8A
R8B
R8C
R8D
10K
BSS138
Q3A
Q3B
SCL
SDA
PA23_SCL
PA22_SDA
adafruit
${PROJECTNAME}
${CURRENT_DATE}
Sheet: ${#}/${##}
Drawing: ${AUTHOR}
Adafruit Industries
Title:
Size: User
Date:
Rev:
KiCad E.D.A. eeschema 7.0.6
Id: 1/1