AODB REST API

2021. 8.

Smartport Technology

Contents

1. OVERVIEW 1
1.1. Purpose 1
1.2. Scope of the document 1
1.3. System Interface Structure 1
1.4. Role by System 2
2. API DESIGN 3
2.1. Client Authentication 3
2.2. Setting authentication key when calling API (HTTP Header) 3
2.3. White List IP Management 3
2.4. API Request And Authentication Process 4
2.5. HTTP response status codes and response messages 4
3. FIDS REST API 5
3.1. Overview 5
3.2. API List 5
3.3. API Detail 6
3.4. Data Model Definition 14
4. DANS BILLING API 16
4.1. Overview 16
4.2. API List 16
4.3. API Detail 17
4.4. Data Model Definition 22
5. DANS ATM API 23
5.1. Overview 23
5.2. AODB Side API List 23
5.3. DANS Side API List 23
5.4. AODB Side API Detail 24

5.5. DANS Side API Detail 26
5.6. Data Model Definition 36

6. MOBILE APP API 37
6.1. Overview 37
6.2. API List 37
6.3. API Detail 37
6.4. Data Model Definition 43

7. SITREP API 46
7.1. Overview 46
7.2. API List 46
7.3. API Detail 47
7.4. Data Model Definition 48

8. CLEARANCE API 51
8.1. Overview 51
8.2. AODB Side API List 51
8.3. Clearance Portal Side API List 51
8.4. API Detail 52
8.5. Data Model Definition 58

9. STATISTICS API 61
9.1. Overview 61
9.2. API List 61
9.3. API Detail 62
9.4. Data Model Definition 63

1. Overview

1.1. Purpose

In order to further improve system integration, it was decided to change some of the linkage structure between AODB and the existing system to RESTful API.
This document was written to define the RESTful API provided by AODB.

1.2. Scope of the document

This document defines RESTful API functions provided to systems that receive data from AODB, such as FIDS, DANS BILLING, DANS ATM system, and Mobile Application for Operation Airside departments.
Therefore, this document defines the authentication processing method of RESTful API, the API list for each system, detailed API information and examples, and the linked data model.

1.3. System Interface Structure

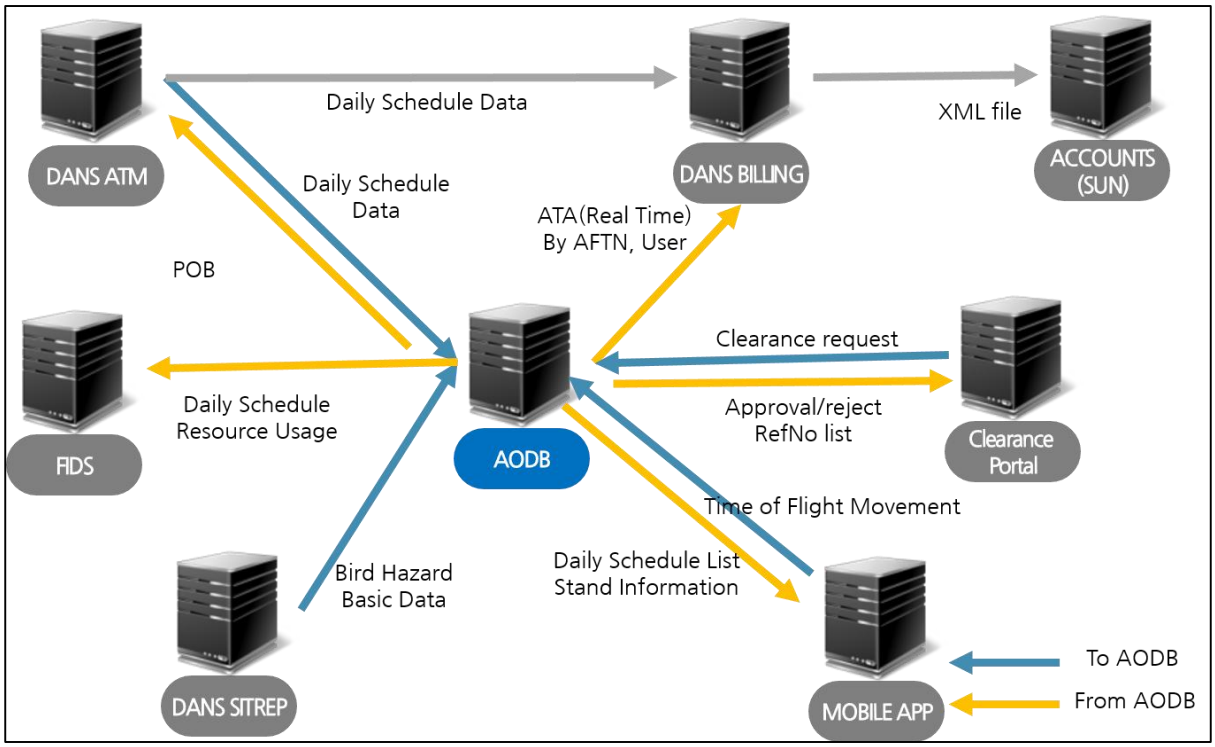

Figure 1. AODB Interface structure

1.4. Role by System

No	Interface System	Description
1	AODB	Perform overall flight schedule management, resource allocation and usage management Create and manage daily flight information using Flight Schedule management and AFTN Flight plan parsing
2	Indra FIDS	Display the Daily Flight Schedule and resource information screen periodically received from AODB
3	DANS ATM	AODB supplements schedule by periodically inquiring data from DANS ATM. DANS ATM obtains POB (Person on board) for each flight schedule from AODB.
4	DANS SITREP	AODB obtains and stores Wildlife basic information from SITREP
5	DANS BILLING	Generate data to be provided to SUN system by obtaining real-time Actual Time of Arrival from AODB
6	SUN System	Billing System
7	Mobile Application	A mobile application for entering real-time aircraft ground movement information. The app obtains the flight schedule from the AODB and displays it, and stores the entered data in the AODB.
8	Clearance Portal	Receives a request for Clearance permission from the airline and sends it to the AODB. Receive and apply data when processing approval/rejection from AODB.

2. API Design

2.1. Client Authentication

The AODB API server provides an authentication method to control access to inappropriate client requests.

The authentication methods provided are white list authentication which defines the list of authorized IPs and API key authentication.

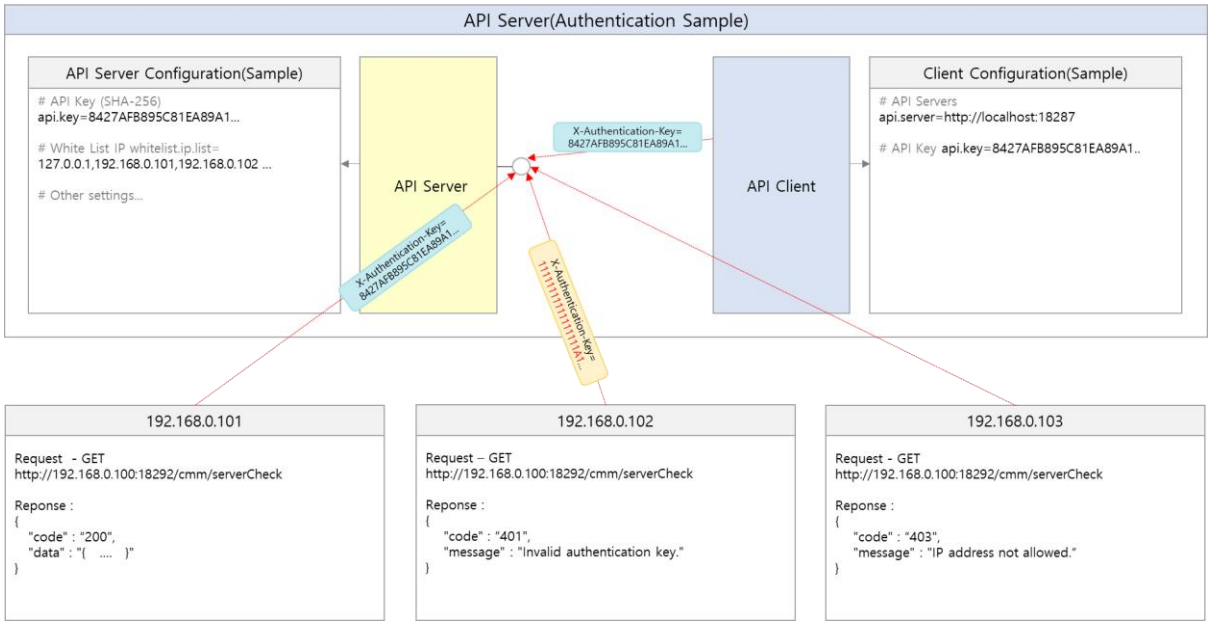

Figure 1. API Server – Client Authentication

2.2. Setting authentication key when calling API (HTTP Header)

The authentication key is generated by hashing the authentication string specified by the system administrator with the SHA-256 algorithm. The generated authentication key will be distributed to each client during the interworking test.

The client calls the API by setting the authentication key in the HTTP Request Header as follows. The API server extracts the header value and checks whether the authentication key is valid.

- Header Key : X-Authentication-Key
- Header value : provided authentication key

2.3. White List IP Management

Since the authentication key is composed of a string, if it is exposed, unauthorized clients

on the network can call the API. AODB API Server processes requests only for API calls that match the authentication key from the specified IP.

2.4. API Request And Authentication Process

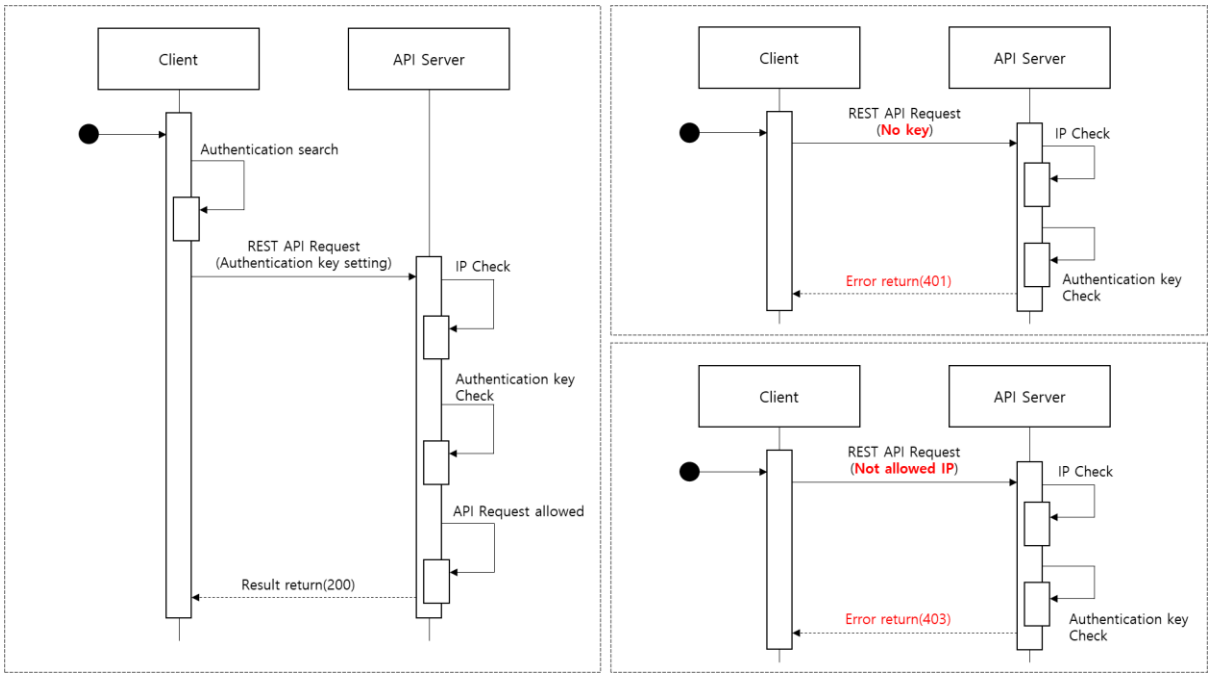

Figure 5. API request and authentication process

2.5. HTTP response status codes and response messages

The API server returns an HTTP response status code of 200 for all requests, and returns a processing result code in the code attribute value of the response message. When an error occurs, an error message is added to the message attribute value along with the code. When calling the list search API, if there is no searched item, an empty array is returned with a response code of 200.

Code	Message	Description
200	-	Processed normaly
401	Unauthorized	If the authentication key is not entered or the authentication key is incorrect
403	Not Allowed	When requested by a disallowed client
404	Not Found	If the resource for the identifier does not exist when viewing detailed information
500	Internal Server Error	If the logic encountered an error while processing

3. FIDS REST API

3.1. Overview

FIDS RESTful API is a function to query data to display flight information in FIDS.
The FIDS-linked data is departure and arrival flight schedule information and airport resource usage information related to the flight schedule.

3.2. API List

No	API	HTTP Method	URI	Request Model	Response Model
1	Arrival Flight Schedule Information	POST	/fids/arrSchInfo	N/A	flightScheduleInfo
2	Arrival Carousel Operation Information	POST	/fids/arrCrsInfo	N/A	resourceInfo
3	Departure Flight Schedule Information	POST	/fids/depSchInfo	N/A	flightScheduleInfo
4	Departure Checkin-counter Operation Information	POST	/fids/depCicInfo	N/A	resourceInfo
5	Departure Gate Operation Information	POST	/fids/depGateInfo	N/A	resourceInfo
6	Airport Code	POST	/fids/airportCode	N/A	airportCodeInfo
7	Airline Code	POST	/fids/airlineCode	N/A	airlineCodeInfo
8	AODB API Server check	GET	/cmm/serverCheck	N/A	N/A
9					

3.3. API Detail

3.3.1. Arrival Flight Schedule Information API

Name	Arrival Flight Schedule Information		HTTP Method	POST
Description	Inquire the flight schedule of arrival flights for a certain period.			
Request	URL	http://{hostname}:{port}/fids/arrSchInfo		
	Content Type	application/json	Model	N/A
	Query Params	N/A		
	Body(example)			
	{ "fromDatetime":"202108030300", "toDatetime": "202108040500" }			
Response	Content Type	application/json	Model	flightScheduleInfo
	Body(example)			
	[{ "flightIataCode":"ET" , "airlineName": "ETHIOPIAN AIRLINES" , "flightNumber":"335" , "arrOrDep":"A" , "scheduledDate": "20210803" , "scheduledTime": "202108031600" , "estimatedTime":" 202108031555" , "originAirport":"ADD" , "originAirportName" : "ADDIS ABABA" , "destinationAirport": null , "destinationAirportName": null, , "flightStatus":"LANDED" , "divertedAirport":null , "terminal":"T1" , "typeOfFlight":"INT" , "flightServiceType":"J" , "linkedFlightNumber":"336" , "deleteYn":"N" , "logoFilePath": "/files/images/ETETH_MediumLogo_xxxxx.png" , "logoBase64": " iVBORw0KGgoAAAANSUhEU....." }, { }, { } .....]			

3.3.2. Arrival Carousel Operation Information API

Name	Arrival Carousel Operation Information		HTTP Method	POST
Description	Inquire the Carousel Operation informations of arrival flights for a certain period.			
Request	URL	http://{hostname}:{port}/fids/arrCrsInfo		
	Content Type	application/json	Model	N/A
	Query Params	N/A	Path Params	N/A
	Body(example)			

	{
	"fromDatetime":"202108030300",
	"toDatetime": "202108040500"
	}			

Response	Content Type	application/json	Model	resourceInfo
	Body(example)			

	{
	"code": 200,
	"data": [
	{ "flightIataCode":"ET"
	, "flightNumber":"335"
	, "rscType":"B"
	, "scheduledDate": "20210803"
	, "scheduledTime": "202108031600"
	, "useStartTime":"202108031615"
	, "useEndTime":" 202108031715"
	, "rscNumber":"Belt1"
	},
	{ "flightIataCode":"KQ"
	, "flightNumber":"579"
	, "rscType":"B"
	, "scheduledDate": "20210803"
	, "scheduledTime": "202108031700"
	, "useStartTime":"202108031715"
	, "useEndTime":" 202108031815"
	, "rscNumber":"Belt2"
	},
	{ }, { } .....
	]
	}			

3.3.3. Departure Flight Schedule Information API

Name	Departure Flight Schedule Information		HTTP Method	POST
Description	Inquire the flight schedule of departure flights for a certain period.			
Request	URL	http://{hostname}:{port}/fids/depSchInfo		
	Content Type	application/json	Model	N/A
	Query Params	N/A		
	Body(example)			
	{ "fromDatetime":"202108030300", "toDatetime": "202108040500" }			
Response	Content Type	application/json	Model	flightScheduleInfo
	Body(example)			
	[{ "flightIataCode":"ET" , "airlineName": "ETHIOPIAN AIRLINES" , "flightNumber":"336" , "arrOrDep":"D" , "scheduledDate": "20210803" , "scheduledTime": "202108031900" , "estimatedTime":" 202108031905" , "originAirport": null , "originAirportName" : null , "destinationAirport":"ADD" , "destinationAirportName": "ADDIS ABABA" , "flightStatus":"DEPARTED" , "divertedAirport":"" , "terminal":"T1" , "typeOfFlight":"INT" , "flightServiceType":"J" , "linkedFlightNumber":"335" , "deleteYn":"N" , "logoFilePath": "/files/images/ETETH_MediumLogo_xxxxx.png" , "logoBase64": " iVBORw0KGgoAAAANSUhEU....." }, { }, { } .....]			

3.3.4. Departure Checkin-counter Operation Information API

Name	Departure Checkin-counter Operation Information		HTTP Method	POST
Description	Inquire the CIC Operation Information of departure flights for a certain period.			
Request	URL	http://{hostname}:{port}/fids/depCicInfo		
	Content Type	application/json	Model	N/A
	Query Params	N/A	Path Params	N/A
	Body(example)			

	<pre>{
	"fromDatetime":"202108030300",
	"toDatetime": "202108040500"
	}</pre>			

Response	Content Type	application/json	Model	resourceInfo
	Body(example)			

	<pre>{
	"code": 200,
	"data": [
	{ "flightIataCode":"ET"
	, "flightNumber":"336"
	, "rscType":"C"
	, "scheduledDate": "20210803"
	, "scheduledTime": "202108031900"
	, "useStartTime":"202108031500"
	, "useEndTime":" 202108031800"
	, "rscNumber":"C01"
	},
	{ "flightIataCode":"ET"
	, "flightNumber":"336"
	, "rscType":"C"
	, "scheduledDate": "20210803"
	, "scheduledTime": "202108031900"
	, "useStartTime":"202108031500"
	, "useEndTime":" 202108031800"
	, "rscNumber":"C02"
	},
	{ }, { } .....
	]
	}</pre>			

3.3.5. Departure Gate Operation Information API

Name	Departure Gate Operation Information		HTTP Method	POST
Description	Inquire the gate Operation Information of departure flights for a certain period.			
Request	URL	http://{hostname}:{port}/fids/depGateInfo		
	Content Type	application/json	Model	N/A
	Query Params	N/A	Path Params	N/A
	Body(example)			

	{
	"fromDatetime":"202108030300",
	"toDatetime": "202108040500"
	}			

Response	Content Type	application/json	Model	resourceInfo
	Body(example)			

	{
	"code": 200,
	"data": [
	{ "flightIataCode":"ET"
	, "flightNumber":"336"
	, "rscType":"G"
	, "scheduledDate": "20210803"
	, "scheduledTime": "202108031900"
	, "useStartTime":"202108031800"
	, "useEndTime":" 202108031900"
	, "rscNumber":"G01"
	},
	{ "flightIataCode":"KQ"
	, "flightNumber":"578"
	, "rscType":"G"
	, "scheduledDate": "20210803"
	, "scheduledTime": "202108032100"
	, "useStartTime":"202108031900"
	, "useEndTime":" 202108032045"
	, "rscNumber":"G02"
	},
	{ }, { } .....
	]
	}			

3.3.6. Airport Code API

Name	Airport Code		HTTP Method	POST
Description	Inquire the airport code by IATA code			
Request	URL	http://{hostname}:{port}/fids/airportCode		
	Content Type	application/json	Model	N/A
	Query Params	N/A	Path Params	N/A
	Body(example)			

	{
	"iataCode":"MBQ",
	}			

Response	Content Type	application/json	Model	airportCodeInfo
	Body(example)			

	{
	"code": 200,
	"data": [
	{ "iataCode":"MBQ"
	, "countryCode":"UG"
	, "name":" Mbarara Airport"
	, "icaoCode": "HUMA"
	, "cityName": "Mbarara"
	}
	]
	}			

3.3.7. Airline Code API

Name	Airline Code		HTTP Method	POST
Description	Inquire the airline code by IATA code			
Request	URL	http://{hostname}:{port}/fids/airlineCode		
	Content Type	application/json	Model	N/A
	Query Params	N/A	Path Params	N/A
	Body(example)			

	{
	"iataCode":"KQ",
	}			

Response	Content Type	application/json	Model	airlineCodeInfo
	Body(example)			

	{
	"code": 200,
	"data": [
	{ "iataCode":"KQ"
	, "name":"Kenya Airways"
	, "icaoCode": "KQA"
	}
	]
	}			

3.3.8. AODB API Server check API

Name	AODB API Server check		HTTP Method	POST
Description	Check server availability			
Request	URL	http://{hostname}:{port}/cmm/serverCheck		
	Content Type	application/json	Model	N/A
	Query Params	N/A	Path Params	N/A
	Body(example)			
	N/A			
Response	Content Type	application/json	Model	N/A
	Body(example)			

	{
	"code": 200,
	"message": ""
	}			

3.4. Data Model Definition

This section defines the type and properties of the Model constituting each API response message body. The data type and maximum length are written based on the column of the DB (Oracle) table.

3.4.1. flightScheduleInfo

Field	Type	Byte	Description
flightIataCode	VARCHAR2	3	Airline IATA Code
airlineName	VARCHAR2	100	
flightNumber	VARCHAR2	10	
arrOrDep	VARCHAR2	1	Arrival/departure classification(A, D)
scheduledDate	VARCHAR2	8	Date of flight YYYYMMDD
scheduledTime	VARCHAR2	12	Scheduled time of arrival/departure YYYYMMDDHH24MI
estimatedTime	VARCHAR2	12	Estimated time of arrival/departure YYYYMMDDHH24MI
originAirport	VARCHAR2	4	IATA code of origin airport
originAirportName	VARCHAR2	100	
destinationAirport	VARCHAR2	4	IATA code of destination airport
destinationAirportName	VARCHAR2	100	
flightStatus	VARCHAR2	3	Flight Operation Code
divertedAirport	VARCHAR2	4	IATA code of diverted airport
Terminal	VARCHAR2	4	T1, T2
typeOfFlight	VARCHAR2	3	INT:International, DOM:Domestic
flightServiceType	VARCHAR2	1	Service type of flight
linkedFlightNumber	VARCHAR2	10	Linked flight number of arrival/departure
deleteYn	VARCHAR2	1	Flight delete flag
logoFilePath	VARCHAR2	100	Logo Filepath
logoBase64	VARCHAR2		Encoding Data

3.4.2. resourceInfo

Field	Type	Byte	Description
flightIataCode	VARCHAR2	3	Airline IATA Code
flightNumber	VARCHAR2	10	
rscType	VARCHAR2	1	Type of Resource G:Gate, C:Check-in Counter, B:Carousel Belt
scheduledDate	VARCHAR2	8	Date of flight YYYYMMDD

scheduledTime	VARCHAR2	12	Scheduled time of arrival/departure YYYYMMDDHH24MI
useStartTime	VARCHAR2	12	Start time of resource usage
useEndTime	VARCHAR2	12	End time of resource usage
rscNumber	VARCHAR2	4	Resource Number

3.4.3. airportCodeInfo

Field	Type	Byte	Description
iataCode	VARCHAR2	4	Airport IATA Code
countryCode	VARCHAR2	2	For airport
name	VARCHAR2	100	Airport Name
icaoCode	VARCHAR2	4	
cityName	VARCHAR2	100	

4. DANS BILLING API

4.1. Overview

The DANS BILLING APIs are functions that the DANS BILLING system requests ATA information from AODB to inquire data.

4.2. API List

No	API	HTTP Method	URI	Request Model	Response Model
1	Query by callsign and date and scheduled time for Actual Time of Arrival flight	POST	/dansbill/atabycallsign	N/A	ataInfo
2	Query Actual Time of Arrival by date of flight	POST	/dansbill/atabydate	N/A	ataInfo
3	Query Actual Time of Arrival by time range	POST	/dansbill/atabytimerange	N/A	ataInfo
4	Query Pax info of flight by date	POST	/dansbill/gdinfobydate	N/A	GdInfo
5	Query Pax info of flight by timerange	POST	/dansbill/ gdinfobytimerange	N/A	GdInfo

4.3. API Detail

4.3.1 Query by callsign and date and scheduled time for ATA API

Name	Query by callsign and date and scheduled time for Actual Time of Arrival flight		HTTP Method	POST
Description	Inquiry of actual landing time for a single arrival flight			
Request	URL	http://{hostname}:{port}/dansbill/atabycallsign		
	Content Type	application/json	Model	N/A
	Query Params	N/A		
	Body(example)			

	{
	"callsign":"ETH335"
	"date":"20210803",
	}			

Response	Content Type	application/json	Model	ataInfo
	Body(example)			

	{
	"flightIcaoCode":"ETH"
	, "flightNumber":"335"
	, "aircraftReg" : "ETZDB"
	, "scheduledTime": "202108031600"
	, "ATA":" 202108031555"
	}			

4.3.2 Query Actual Time of Arrival by date of flight API

Name	Query Actual Time of Arrival by date of flight		HTTP Method	POST
Description	Inquiry of actual landing time for all arrivals by date			
Request	URL	http://{hostname}:{port}/dansbill/atabydate		
	Content Type	application/json	Model	N/A
	Query Params	N/A		
	Body(example)			

	{
	"date":"20210803",
	}			

Response	Content Type	application/json	Model	ataInfo
	Body(example)			

	{
	[
	{ "flightIcaoCode":"ETH"
	, "flightNumber":"336"
	, "aircraftReg" : "ETZDB"
	, "scheduledTime": "202108031900"
	, "ATA":"202108031905"
	},
	{ }, { } .....
	]
	}			

4.3.3 Query Actual Time of Arrival by time range API

Name	Query Actual Time of Arrival by time range		HTTP Method	POST
Description	Inquire about the actual landing time of all arrivals for each period			
Request	URL	http://{hostname}:{port}/dansbill/atabytimerange		
	Content Type	application/json	Model	N/A
	Query Params	N/A		
	Body(example)			

	<pre>{
	"fromDatetime":"202108031900",
	"toDatetime": "202108040500"
	}</pre>			

Response	Content Type	application/json	Model	ataInfo
	Body(example)			

	<pre>{
	[
	{ "flightIcaoCode":"ETH"
	, "flightNumber":"336"
	, "aircraftReg" : "ETZDB"
	, "scheduledTime": "202108031900"
	, "ATA":"202108031905"
	},
	{ "flightIcaoCode":"KQA"
	, "flightNumber":"245"
	, "aircraftReg" : "KQZDB"
	, "scheduledTime": "202108032010"
	, "ATA":"202108032005"
	}, { }, { } .....
	]
	}</pre>			

4.3.4 Query pax info of flights by date API

Name	Query pax info of flights by date		HTTP Method	POST
Description	Inquire about the pax info of all flights for each date			
Request	URL	http://{hostname}:{port}/dansbill/gdinfobydate		
	Content Type	application/json	Model	N/A
	Query Params	N/A		
	Body(example)			

	{
	"date":"20210803"
	}			

Response	Content Type	application/json	Model	ataInfo
	Body(example)			
	[{ "flightIcaoCode":"ETH" , "flightNumber":"336" , "aircraftReg" : "ETZDB" , "scheduledDate": "20210803" , "adultCount":"123" , "infantCount":"1" , "crewCount":"10" , "sodCount":"0" , "transitCount":"10" }, { }, { } .....]			

4.3.5 Query pax info of flights by time range API

Name	Query pax info of flights by time range		HTTP Method	POST
Description	Inquire about the pax info of all flights for a period			
Request	URL	http://{hostname}:{port}/dansbill/gdinfobytimerange		
	Content Type	application/json	Model	N/A
	Query Params	N/A		
	Body(example)			
	{ "fromDatetime":"202108031900", "toDatetime": "202108040500" }			
Response	Content Type	application/json	Model	ataInfo
	Body(example)			
	[{ "flightIcaoCode":"ETH" , "flightNumber":"336" , "aircraftReg" : "ETZDB" , "scheduledDate": "20210803" , "adultCount":"123" , "infantCount":"1" , "crewCount":"10" , "sodCount":"0" , "transitCount":"10" }, { }, { } .....]			

4.4. Data Model Definition

This section defines the type and properties of the Model constituting each API response message body. The data type and maximum length are written based on the column of the DB (Oracle) table.

4.4.1 ataInfo

Field	Type	Byte	Description
flightIcaoCode	VARCHAR2	3	Airline ICAO Code
flightNumber	VARCHAR2	10	
aircraftReg	VARCHAR2	12	
scheduledTime	VARCHAR2	12	Scheduled time of arrival YYYYMMDDHH24MI
ATA	VARCHAR2	12	Actual time of arrival YYYYMMDDHH24MI

4.4.2 GdInfo

Field	Type	Byte	Description
flightIcaoCode	VARCHAR2	3	Airline ICAO Code
flightNumber	VARCHAR2	10	
aircraftReg	VARCHAR2	12	
scheduledDate	VARCHAR2	12	Scheduled date of flight YYYYMMDD
adultCount	NUMBER	3	
infantCount	NUMBER	3	
crewCount	NUMBER	3	
sodCount	NUMBER	3	
transitCount	NUMBER	3	

5. DANS ATM API

5.1. Overview

The DANS ATM APIs are functions that the DANS ATM system requests 'Persons on board'(POB) information from AODB to inquire data.

5.2. AODB Side API List

No	API	HTTP Method	URI	Request Model	Response Model
1	Query by date of flight for POB	POST	/dansatm/dof	N/A	pobInfo
2	Query by time range for POB	POST	/dansatm/timerange	N/A	pobInfo

5.3. DANS Side API List

No	API	HTTP Method	URI	Request Model	Response Model
1	Query by Date	POST	/aodbapi/dateofflight	N/A	DansAtm
2	Query by Date and Flight mode	POST	/aodbapi/dateofflight/flightmode	N/A	DansAtm
3	Query by Date and Callsign	POST	/aodbapi/dateofflight/callsign		DansAtm
4	Query by Date and Registration	POST	/aodbapi/dateofflight/registration		DansAtm
5	Query by Date and Airline Code	POST	/aodbapi/dateofflight/airlinecode		DansAtm
6	Query by Time Range	POST	/aodbapi/timerange		DansAtm
7	Query by Time Range and Flight mode	POST	/aodbapi/timerange/flightmode		DansAtm
8	Query by Time Range and Callsign	POST	/aodbapi/timerange/callsign		DansAtm
9	Query by Time Range and Registration	POST	/aodbapi/timerange/registration		DansAtm
10	Query by Time Range and Airline Code	POST	/aodbapi/timerange/airlinecode		DansAtm

5.4. AODB Side API Detail

5.2.1 Query by date of flight for POB API

Name	Query by date of flight for POB		HTTP Method	POST
Description	Inquiry of 'Persons on board' data by date			
Request	URL	http://{hostname}:{port}/dansatm/dof		
	Content Type	application/json	Model	N/A
	Query Params	N/A		
	Body(example)			

	{
	"date":"20210803",
	}			

Response	Content Type	application/json	Model	pobInfo
	Body(example)			
	[{ "flightIcaoCode":"ETH" , "flightNumber":"336" , "aircraftReg":"ETDBZ" , "arrOrDep":"D" , "scheduledTime": "202108031600" , "POB":" 123" }, { }, { } .....]			

5.2.2 Query by time range for POB API

Name	Query by time range for POB		HTTP Method	POST
Description	Inquiry of 'Persons on board' data by period			
Request	URL	http://{hostname}:{port}/dansatm/timerange		
	Content Type	application/json	Model	N/A
	Query Params	N/A		
	Body(example)			

	{
	"fromDatetime":"202108030300",
	"toDatetime": "202108040500"
	}			

Response	Content Type	application/json	Model	pobInfo
	Body(example)			

	{
	[
	{ "flightIcaoCode":"ETH"
	, "flightNumber":"336"
	, "aircraftReg":"ETDBZ"
	, "arrOrDep":"D"
	, "scheduledTime": "202108031600"
	, "POB":" 123"
	}, { }, { } ……]
	}			

5.5. DANS Side API Detail

5.5.1 Query by Date API

Name	Date Only		HTTP Method	POST
Description	Get all flights that occurred on a given date			
Request	URL	http://10.10.32.100:4733/aodbapi/dateofflight		
	Content Type	application/json	Model	N/A
	Query Params	N/A		
	Body(example)			
	{ "date": "2021-10-01" }			
Response	Content Type	application/json	Model	N/A
	Body(example)			
	[{ "date": "2021-10-01", "callsign": "LNK191", "registration": "ZSYAD", "aircraft": "E190", "origin": "HUEN", "destination": "FAOR", "ata": null, "atd": "2021-10-01T00:35:00", "pob": 30, "flightMode": "Departure", "airline": "Airlink", "airlineCode": "LNK", "entryPoint": null, "entryTime": null, "exitPoint": "APNAD", "exitTime": "00:45" }, { … }, { … }]			

5.5.2 Query by Date and Flight mode API

Name	Query by date		HTTP Method	POST
Description	Get all flights of a given mode that occurred on a given date. The available values for flight mode are “Arrival”, “Departure”, “Overflight”, “Training”			
Request	URL	http://10.10.32.100:4733/aodbapi/dateofflight/flightmode		
	Content Type	application/json	Model	N/A
	Query Params	N/A		
	Body(example)			

	{
	"date": "2021-10-01",
	"flightMode": "Arrival",
	}			

Response	Content Type	application/json	Model	N/A
	Body(example)			
	[{ "date": "2021-10-01", "callsign": "THY6492", "registration": "TCJOZ", "aircraft": "A332", "origin": "LTBA", "destination": "HUEN", "ata": "2021-10-01T02:17:00", "atd": null, "pob": 4, "flightMode": "Arrival", "airline": "Turkish Airlines", "airlineCode": "THY", "entryPoint": "ATUGA", "entryTime": "01:31", "exitPoint": null, "exitTime": null }, { … }, { … }]			

5.5.3 Query by Date and Callsign API

Name	Date and Callsign		HTTP Method	POST
Description	Get all flights that occurred on a given date using a give callsign			
Request	URL	http://10.10.32.100:4733/aodbapi/dateofflight/callsign		
	Content Type	application/json	Model	N/A
	Query Params	N/A		
	Body(example)			

	<pre>{
	"date": "2021-10-01",
	"callsign": "KQA421",
	}</pre>			

Response	Content Type	application/json	Model	N/A
	Body(example)			

	<pre>[
	{
	"date": "2021-10-01",
	"callsign": "KQA421",
	"registration": "5YFFD",
	"aircraft": "E190",
	"origin": "HUEN",
	"destination": "HKJK",
	"ata": "2021-10-01T08:45:00",
	"atd": "2021-10-01T07:55:00",
	"pob": 89,
	"flightMode": "Departure",
	"airline": "Kenya Airways",
	"airlineCode": "KQA",
	"entryPoint": null,
	"entryTime": null,
	"exitPoint": "ALKON",
	"exitTime": "08:13"
	}
	]</pre>			

5.5.4 Query by Date and Registration API

Name	Date and Registration		HTTP Method	POST
Description	Get all flights that occurred on a given date for a given aircraft registration			
Request	URL	http://10.10.32.100:4733/aodbapi/dateofflight/registration		
	Content Type	application/json	Model	N/A
	Query Params	N/A		
	Body(example)			

	<pre>{
	"date": "2021-10-01",
	"registration": "ZSCGO",
	}</pre>			

Response	Content Type	application/json	Model	N/A
	Body(example)			

	<pre>[
	{
	"date": "2021-10-01",
	"callsign": "ZSCGO",
	"registration": "ZSCGO",
	"aircraft": "B190",
	"origin": "FZJB",
	"destination": "HUEN",
	"ata": "2021-10-01T06:46:00",
	"atd": null,
	"pob": 16,
	"flightMode": "Arrival",
	"airline": "KIBALI GOLD",
	"airlineCode": null,
	"entryPoint": null,
	"entryTime": "06:11",
	"exitPoint": null,
	"exitTime": null
	},
	{ … }, { … }
	]</pre>			

5.5.5 Query by Date and Airline Code API

Name	Date and Airline Code		HTTP Method	POST
Description	Get all flights of a given airline that occurred on a given date			
Request	URL	http://10.10.32.100:4733/aodbapi/dateofflight/registration		
	Content Type	application/json	Model	N/A
	Query Params	N/A		
	Body(example)			

	{
	"date": "2021-10-01",
	"airlineCode": "THY",
	}			

Response	Content Type	application/json	Model	N/A
	Body(example)			
	[{ "date": "2021-10-01", "callsign": "THY42A", "registration": "TCJOL", "aircraft": "A333", "origin": "LTFM", "destination": "FAOR", "ata": null, "atd": null, "pob": null, "flightMode": "Overflight", "airline": "Turkish Airlines", "airlineCode": "THY", "entryPoint": "OVELA", "entryTime": "04:00", "exitPoint": "EGREK", "exitTime": "04:44" }, { … }, { … }]			

5.5.6 Query by Time Range API

Name	Time Range Only		HTTP Method	POST
Description	Get all flights that occurred within a given time period/range			
Request	URL	http://10.10.32.100:4733/aodbapi/timerange		
	Content Type	application/json	Model	N/A
	Query Params	N/A		
	Body(example)			

	<pre>{
	"starttime": "2021-10-01T10:30",
	"endtime": "2021-10-01T12:30"
	}</pre>			

Response	Content Type	application/json	Model	N/A
	Body(example)			

	<pre>[
	{
	"date": "2021-10-01",
	"callsign": "ATC215",
	"registration": "5HTCE",
	"aircraft": "DH8D",
	"origin": "HUEN",
	"destination": "HTKJ",
	"ata": "2021-10-01T13:26:00",
	"atd": "2021-10-01T12:00:00",
	"pob": 21,
	"flightMode": "Departure",
	"airline": "Air Tanzania",
	"airlineCode": "ATC",
	"entryPoint": null,
	"entryTime": null,
	"exitPoint": null,
	"exitTime": "12:22"
	},
	{ … }, { … }
	]</pre>			

5.5.7 Query by Time Range and Flight mode API

Name	Time Range and Flight Mode		HTTP Method	POST
Description	Get all flights of a specified mode that occurred within a given time period/range. The available values for flight mode are “Arrival”, “Departure”, “Overflight”, “Training”			
Request	URL	http://10.10.32.100:4733/aodbapi/timerange/flightmode		
	Content Type	application/json	Model	N/A
	Query Params	N/A		
	Body(example)			

	<pre>{
	"starttime": "2021-10-01T10:30",
	"endtime": "2021-10-01T12:30",
	"flightMode": "Departure"
	}</pre>			

Response	Content Type	application/json	Model	N/A
	Body(example)			

	<pre>[
	{
	"date": "2021-10-01",
	"callsign": "ATC215",
	"registration": "5HTCE",
	"aircraft": "DH8D",
	"origin": "HUEN",
	"destination": "HTKJ",
	"ata": "2021-10-01T13:26:00",
	"atd": "2021-10-01T12:00:00",
	"pob": 21,
	"flightMode": "Departure",
	"airline": "Air Tanzania",
	"airlineCode": "ATC",
	"entryPoint": null,
	"entryTime": null,
	"exitPoint": null,
	"exitTime": "12:22"
	}, { ... }, { ... }
	]</pre>			

5.5.8 Query by Time Range and Callsign API

Name	Time Range and Callsign		HTTP Method	POST
Description	Get all flights using a given callsing that occurred within a given time period/range			
Request	URL	http://10.10.32.100:4733/aodbapi/timerange/callsign		
	Content Type	application/json	Model	N/A
	Query Params	N/A		
	Body(example)			

	<pre>{
	"starttime": "2021-10-03T00:00",
	"endtime": "2021-10-06T00:00",
	"callsign": "ETH861"
	}</pre>			

Response	Content Type	application/json	Model	N/A
	Body(example)			

	<pre>[
	{
	"date": "2021-10-03",
	"callsign": "ETH861",
	"registration": "ETASH",
	"aircraft": "B788",
	"origin": "HAAB",
	"destination": "FCBB",
	"ata": null,
	"atd": null,
	"pob": null,
	"flightMode": "Overflight",
	"airline": "Ethiopian Airlines",
	"airlineCode": "ETH",
	"entryPoint": "PATAR",
	"entryTime": "07:11",
	"exitPoint": "NALOS",
	"exitTime": "07:40"
	}, { ... }, { ... }
	]</pre>			

5.5.9 Query by Time Range and Registration API

Name	Time Range and Registration		HTTP Method	POST
Description	Get all flights of a given aircraft registration that occurred within a given time period/range			
Request	URL	http://10.10.32.100:4733/aodbapi/timerange/registration		
	Content Type	application/json	Model	N/A
	Query Params	N/A		
	Body(example)			

	<pre>{
	"starttime": "2021-10-02T00:00",
	"endtime": "2021-10-03T00:00",
	"registration": "A6EGY"
	}</pre>			

Response	Content Type	application/json	Model	N/A
	Body(example)			

	<pre>[
	{
	"date": "2021-10-02",
	"callsign": "UAE729",
	"registration": "A6EGY",
	"aircraft": "B77W",
	"origin": "OMDB",
	"destination": "HUEN",
	"ata": "2021-10-02T10:51:00",
	"atd": null,
	"pob": 160,
	"flightMode": "Arrival",
	"airline": "Emirates Airlines",
	"airlineCode": "UAE",
	"entryPoint": "PATAR",
	"entryTime": "10:17",
	"exitPoint": null,
	"exitTime": null
	}, { ... }, { ... }
	]</pre>			

5.5.10 Query by Time Range and Airline Code API

Name	Time Range and Airline Code		HTTP Method	POST
Description	Get all flights for a given airline that occurred within a given time period/range			
Request	URL	http://10.10.32.100:4733/aodbapi/timerange/airlinecode		
	Content Type	application/json	Model	N/A
	Query Params	N/A		
	Body(example)			

	<pre>{
	"starttime": "2021-10-02T00:00",
	"endtime": "2021-10-03T00:00",
	"airlinecode": "RWD"
	}</pre>			

Response	Content Type	application/json	Model	N/A
	Body(example)			

	<pre>[
	{
	"date": "2021-10-02",
	"callsign": "RWD304",
	"registration": "9XRWN",
	"aircraft": "A332",
	"origin": "HRYR",
	"destination": "OMDB",
	"ata": "2021-10-02T04:58:00",
	"atd": null,
	"pob": null,
	"flightMode": "Overflight",
	"airline": "Rwandair Express",
	"airlineCode": "RWD",
	"entryPoint": "OKTEX",
	"entryTime": "23:33",
	"exitPoint": "PATAR",
	"exitTime": "00:11"
	},
	{ … }, { … }
	]</pre>			

5.6. Data Model Definition

This section defines the type and properties of the Model constituting each API response message body. The data type and maximum length are written based on the column of the DB (Oracle) table.

5.6.1 PobInfo

Field	Type	Byte	Description
flightIcaoCode	VARCHAR2	3	Airline ICAO Code
flightNumber	VARCHAR2	10	
aircraftReg	VARCHAR2	12	
scheduledTime	VARCHAR2	12	Scheduled time of arrival YYYYMMDDHH24MI
POB	NUMBER	3	Persons on Board

5.6.2 DansAtm

Field	Type	Byte	Description
date	VARCHAR2	3	Scheduled Date YYYY-MM-DD
callsign	VARCHAR2	10	
registration	VARCHAR2	12	
aircraft	VARCHAR2	10	
origin	VARCHAR2		
destination	VARCHAR2		
ata	VARCHAR2	19	Actual time of arrival YYYY-MM-DD||T||HH24:MI:SS
atd	VARCHAR2	19	Actual time of departure YYYY-MM-DD||T||HH24:MI:SS
pob	NUMBER	3	Persons on Board
flightMode	VARCHAR2		Arrival, Departure, Training, Overflight
airline	VARCHAR2		Airline Name
airlineCode	VARCHAR2		ICAO
entryPoint	VARCHAR2		
entryTime	VARCHAR2		
exitPoint	VARCHAR2		
exitTime	VARCHAR2		

6. Mobile APP API

6.1. Overview

Mobile APP APIs are functions that retrieve daily flight schedule information from AODB, display it on the APP, and input aircraft movement information.

6.2. API List

No	API	HTTP Method	URI	Request Model	Response Model
1	Daily arrival flight schedule	POST	/standapi/arrmovementinfo	N/A	arrMovementInfo
2	Daily departure flight schedule	POST	/standapi/depmovementinfo	N/A	depMovementInfo
3	Saving flight ground movement time and registration	POST	/standapi/update	N/A	N/A
4	App login	POST	/standapi/login	N/A	N/A
5	App logout	POST	/standapi/logout	N/A	N/A

6.3. API Detail

6.3.1. Daily arrival flight schedule API

Name	Time information of daily arrival flight schedule		HTTP Method	POST
Description	Daily flight schedule time information inquiry from -1 to +24 hours based on the current time (Local Time)			
Request	URL	http://{hostname}:{port}/standapi/arrmovementinfo		
	Content Type	application/json	Model	N/A
	Query Params	N/A		
	Body(example)			

	{
	"fromDatetime":"202108030300",
	"toDatetime": "202108040500"
	}			

Response	Content Type	application/json	Model	arrMovementInfo
	Body(example)			

	{
	[
	{ “flightId”:”00000000000000000124069”
	, “flightIataCode”:”ET”
	, “flightIcaoCode”:”ETH”
	, “airlineName”:”ETHIOPIAN AIR”
	, “aircraftReg” : “ETHOS”
	, “aircraftType” : “B738”
	, “flightNumber”:”335”
	, “callsign” : “ETH335”
	, "arrOrDep":"A"
	, "scheduledDate": “20210803”
	, "scheduledTime": "202108031600"
	, “estimatedTime”:” 202108031555”
	, “originAirport”:”ADD”
	, “originAirportIcao”:”ADD”
	, “destinationAirport”:””
	, “destinationAirportIcao”:””
	, “OperationStatus”:”BRIDGE ON”
	, “divertedAirport”:””
	, “terminal”:”T1”
	, “typeOfFlight”:”INT”
	, “flightServiceType”:”J”
	, “linkedFlightNumber”:”336”
	, “ATA”:” 202108031540” //actual time of arrival
	, “RPI”:” 202108031550” //ramp in time
	, “SPI”:” 202108031555” //on block time
	, “BTI”:” 202108031605” //bridge on time
	, “stand” : “A1S01”
	},
	{ } ……
	]
	}			

6.3.2. Daily departure flight schedule API

Name	Time information of daily departure flight schedule		HTTP Method	POST
Description	Daily flight schedule time information inquiry from -1 to +24 hours based on the current time (Local Time)			
Request	URL	http://{hostname}:{port}/standapi/depmovementinfo		
	Content Type	application/json	Model	N/A
	Query Params	N/A		
	Body(example)			

	{
	"fromDatetime":"202108030300",
	"toDatetime": "202108040500"
	}			

Response	Content Type	application/json	Model	depMovementInfo
	Body(example)			
	{ [{ "flightId":"00000000000000000124070" , "flightIataCode":"ET" , "flightIcaoCode":"ETH" , "airlineName":"ETHIOPIAN AIR" , "aircraftReg" : "ETHOS" , "aircraftType" : "B738" , "flightNumber":"336" , "callsign" : "ETH335" , "arrOrDep":"D" , "scheduledDate": "20210803" , "scheduledTime": "202108031600" , "estimatedTime":" 202108031555" , "originAirport":"ADD" , "originAirportIcao":"ADD" , "destinationAirport":"" , "destinationAirportIcao":"" , "OperationStatus":"TAKE OFF" , "divertedAirport":"" , "terminal":"T1" , "typeOfFlight":"INT"			

	, "flightServiceType":"J" , "linkedFlightNumber":"336" , "BTO":" 202108031605" //bridge off time , "SPO":" 202108031555" //off block time , "RPO":" 202108031550" //ramp out time , "ATD":" 202108031540" //actual time of Departure , "stand" : "A1S01" }, { } ……] }

6.3.3. Saving flight ground movement time API

Name	Saving flight ground movement time		HTTP Method	POST
Description	The time information entered in the mobile app is saved. And It will be save user log history.			
Request	URL	http://{hostname}:{port}/standapi/movementtime		
	Content Type	application/json	Model	N/A
	Query Params	N/A		
	Body(example)			

	{
	"flightId":" 0000000000000000124070"
	, "colId":"ATD"
	, "value": "202201101630" (Local Time)
	, "sessionId":" 54E4E8582C625B2289CF4A1872DA8B02"
	, "userId" : "ebbadm"
	}			

Response	Content Type	application/json	Model	N/A
	Body(example)			
	{ "flightId": "0000000000000000124070", "regNo" : "ETHAD", "airportIcao" : "HAAB", "operationStatus" : "TAKE OFF" }"			

Remarks	1. value : The mobile app should be able to select the date when entering the time. 2. flight ID : Each flight unique ID. 3. colId : Data column name in which time is entered Arrival : ATA, RPI, SPI, BTI Departure : BTO, SPO, RPO, ATD, REG

6.3.4. User APP login API

Name	AODB user mobile app login		HTTP Method	POST
Description	When a user logs in in the mobile app, the user status is checked and the login history is saved.			
Request	URL	http://{hostname}:{port}/standapi/login		
	Content Type	application/json	Model	N/A
	Query Params	N/A		
	Body(example)			
	{ “userId”:“ebbadm”, “password”:“plainTextPassword” }			
Response	Content Type	application/json	Model	N/A
	Body(example)			

	1. Normal login
	{
	“sessionId” : “54E4E8582C625B2289CF4A1872DA8B02”
	}
	2. User status : SUSPENDED
	{ "code": 900, "data": “Log in fail. User suspended.” }
	3. User data not existed
	{ "code": 901, "data": “User not found.” }
	4. Password incorrect
	{ "code": 902, "data": “The password is incorrect.” }			

Remarks				

6.3.5. User APP logout API

Name	AODB user mobile app log out		HTTP Method	POST
Description	User logout handling, history recording			
Request	URL	http://{hostname}:{port}/standapi/logout		
	Content Type	application/json	Model	N/A
	Query Params	N/A		
	Body(example)			
	{ "userId":"ebbadm", "sessionId" : "54E4E8582C625B2289CF4A1872DA8B02" }			
Response	Content Type	application/json	Model	N/A
	Body(example)			
	{ "code": 200, "data": "" }			
Remarks	The session id received at login must be transmitted.			

6.4. Data Model Definition

This section defines the type and properties of the Model constituting each API response message body. The data type and maximum length are written based on the column of the DB (Oracle) table.

6.4.1 arrMovementInfo

Field	Type	Byte	Description
flighId	VARCHAR2	22	Flight unique ID
flightIataCode	VARCHAR2	5	Airline IATA Code
flightIcaoCode	VARCHAR2	5	Airline ICAO Code
airlineName	VARCHAR2	100	
flightNumber	VARCHAR2	10	
callsign	VARCHAR2	15	Generally ICAO code + Number
arrOrDep	VARCHAR2	1	Arrival/departure classification(A, D)
scheduledDate	VARCHAR2	8	Date of flight YYYYMMDD
scheduledTime	VARCHAR2	12	Scheduled time of arrival YYYYMMDDHH24MI
estimatedTime	VARCHAR2	12	Estimated time of arrival YYYYMMDDHH24MI
originAirport	VARCHAR2	4	IATA code of origin airport
originAirportIcao	VARCHAR2	4	ICAO code of origin airport
destinationAirport	VARCHAR2	4	IATA code of destination airport
destinationAirportIcao	VARCHAR2	4	ICAO code of destination airport
operationStatus	VARCHAR2	20	Operation Status LANDED(ATA), RAMP IN(RPI), ON BLOCK(SPI), BRIDGE ON(BTI), BRIDGE OFF(BTO), OFF BLOCK(SPO), RAMP OUT(RPO), TAKE OFF(ATD)
divertedAirport	VARCHAR2	4	IATA code of diverted airport
Terminal	VARCHAR2	4	T1, T2
typeOfFlight	VARCHAR2	3	INT:International, DOM:Domestic
flightServiceType	VARCHAR2	1	Service type of flight
linkedFlightNumber	VARCHAR2	10	Linked flight number of arrival/departure
ATA	VARCHAR2	12	Actual time of arrival YYYYMMDDHH24MI l
RPI	VARCHAR2	12	Ramp in time

			YYYYMMDDHH24MI
SPI	VARCHAR2	12	On block time(spot in time) YYYYMMDDHH24MI
BTI	VARCHAR2	12	Bridge on time YYYYMMDDHH24MI

6.4.2 depMovementInfo

Field	Type	Byte	Description
flighId	VARCHAR2	22	Flight unique ID
flightIataCode	VARCHAR2	5	Airline IATA Code
flightIcaoCode	VARCHAR2	5	Airline ICAO Code
airlineName	VARCHAR2	100	
flightNumber	VARCHAR2	10	
callsign	VARCHAR2	15	Generally ICAO code + Number
arrOrDep	VARCHAR2	1	Arrival/departure classification(A, D)
scheduledDate	VARCHAR2	8	Date of flight YYYYMMDD
scheduledTime	VARCHAR2	12	Scheduled time of departure YYYYMMDDHH24MI
estimatedTime	VARCHAR2	12	Estimated time of departure YYYYMMDDHH24MI
originAirport	VARCHAR2	4	IATA code of origin airport
originAirportIcao	VARCHAR2	4	ICAO code of origin airport
destinationAirport	VARCHAR2	4	IATA code of destination airport
destinationAirportIcao	VARCHAR2	4	ICAO code of destination airport
operationStatus	VARCHAR2	20	Operation Status LANDED(ATA), RAMP IN(RPI), ON BLOCK(SPI), BRIDGE ON(BTI), BRIDGE OFF(BTO), OFF BLOCK(SPO), RAMP OUT(RPO), TAKE OFF(ATD)
divertedAirport	VARCHAR2	4	IATA code of diverted airport
Terminal	VARCHAR2	4	T1, T2
typeOfFlight	VARCHAR2	3	INT:International, DOM:Domestic
flightServiceType	VARCHAR2	1	Service type of flight
linkedFlightNumber	VARCHAR2	10	Linked flight number of arrival/departure
BTO	VARCHAR2	12	Bridge off time YYYYMMDDHH24MI l
SPO	VARCHAR2	12	Off block time(spot out time) YYYYMMDDHH24MI

RPO	VARCHAR2	12	Ramp out time YYYYMMDDHH24MI
ATD	VARCHAR2	12	Actual time of departure YYYYMMDDHH24MI

7. SITREP API

7.1. Overview

SITREP is an incident reporting system used by ATM Department to record/report Incidents and Operational Safety Occurrences such as runway incursion/excursion, air proximity, bird strikes and other emergencies.

When an incident, such as Bird Strike, happens, the pilot reports the occurrence to the Air Traffic Controller who then fills out the electronic SITREP form. The system then sends the report to concerned parties via email, for information and appropriate action.

AODB includes a module for Bird Hazard and Wildlife Control and Management, which includes the ICAO Bird Strike (IBIS) report form. The Air Traffic Controller, who is in contact with the pilot and other authorities such as meteorology, provides much of the information required in this form. The Situation Report (SITREP) filled by the Air Traffic Controller captures this information.

Therefore, it is appropriate to integrate the SITREP with AODB, to automatically receive the bird strike incident reports from Control Tower. In this integration, it is expected that AODB will provide a HTTP API endpoint where SITREP will send the bird strike information. The Wildlife Management office can later retrieve the record in the AODB System and update the missing information to complete the IBIS report.

7.2. API List

No	API	HTTP Method	URI	Request Model	Response Model
1	SITREP Data storing	POST	/sitrep/insert	N/A	sitrepInfo

7.3. API Detail

7.3.1. SITREP Data Insert API

<table>
<tr><td>Name</td><td colspan="2">SITREP Data Insert</td><td>HTTP Method</td><td>POST</td></tr>
<tr><td>Description</td><td colspan="4">When IBIS information is generated, the SITREP system transmits it to the AODB, and the AODB receives it and converts and stores it according to the Wildlife module.</td></tr>
<tr><td rowspan="5">Request</td><td>URL</td><td colspan="3">http://{hostname}:{port}/sitrep/insert</td></tr>
<tr><td>Content Type</td><td>application/json</td><td>Model</td><td>N/A</td></tr>
<tr><td>Query Params</td><td colspan="3">N/A</td></tr>
<tr><td colspan="4">Body(example)</td></tr>
<tr><td colspan="4">{
"operatorCode": "ADY",
"operatorName": "Air Arabia",
"aircraftType": "A320",
"registration": "A6EGH",
"dateTime": "202111031435",
"timeOfDay": "Day",
"runwayUsed": "R17",
"enrouteLocation": "",
"heightAGL": "500",
"speedIAS": "150",
"phaseOfFlight": "Take-off Run",
"partsStruck": [
{ "part": "Radome", "damaged": "No" },
{ "part": "Windshield", "damaged": "Yes" }
],
"effectOnFlight": "None",
"effectOther": "",
"skyCondition": "No Cloud",
"precipitation": "None",
"pilotWarned": "Yes",
"remarks": "ADY721 REPORTS HITTING BIRDS ON TAKE OFF ROLL RWY17"
}</td></tr>
<tr><td rowspan="3">Response</td><td>Content Type</td><td>application/json</td><td>Model</td><td>N/A</td></tr>
<tr><td colspan="4">Body(example)</td></tr>
<tr><td colspan="4">{ "code": 200, "data": “” }</td></tr>
</table>

7.4. Data Model Definition

This section defines the type and properties of the Model constituting each API response message body The data type is written based on the format provided by the SITREP system.

7.4.1 sitrepInfo

Field	Type	Description	Remark
operatorCode	TEXT	ICAO Code of the Operator	
operatorName	TEXT	Name of aircraft operator	
aircraftType	TEXT	ICAO code of aircraft type	
registration	TEXT	Aircraft registration	
dateTime	TEXT	Actual time of occurrence YYYYMMDDHH24MI	
timeOfDay	TEXT	One of four values [dawn : DWN , day : DAY , dusk : DUK , night : NGT , unknown : UNK]	
runwayUsed	TEXT	Runway used	
enrouteLocation	TEXT	Location if en-route	
heightAGL	NUMBER	Height above ground (ft)	
speedIAS	NUMBER	Speed of aircraft when incident occurs (kt)	
phaseOfFlight	TEXT	One of the following values • Parked : PKD • Taxi : TXI • Take-off run : TKF • Climb : CLB • En-route : ENR • Descent : DEC • Approach : APC • Landing roll : LND	AODB can provide coded values to use
partsStruck	OBJECT[ ]	Maybe 1 or more data objects indicating parts of the aircraft that were struck and if they were damaged. See object description below.	

effectOnFlight	TEXT	Effect on flight. One of the following • None : NNE • Aborted take-off : ATO • Precautionary landing : PLD • Engines shutdown : ESD • Other : EOT	AODB can provide coded values to use
effectOther	TEXT	Description of effect when effectOnFlight is "Other"	
skyCondition	TEXT	Condition of the sky. Can be one of the following • No cloud(Clear) : L • Some cloud(Cloudy) : C • Overcast : O • Raining : R • Drizzling : D • Foggy : F • Sunny : S	AODB can provide coded values to use
precipitation	TEXT	Can be any of • Fog : F • Rain : R • None : N	AODB can provide coded values to use
pilotWarned	TEXT	YES / NO	
remarks	TEXT	Description / pertinent information about incident	

7.4.2 partsStruck

Field	Type	Description	Remark
part	TEXT	Part of aircraft struck and must be one of • Radome • Windshield • Nose • Engine 1 • Engine 2 • Engine 3 • Engine 4 • Propeller • Wing/Rotor • Fuselage • Landing Gear • Tail • Lights • Others	AODB can provide coded values to use
damaged	TEXT	Yes / No	

8. Clearance API

8.1. Overview

Clearance API is a new function between the Clearance module in AODB and DANS system. The contents of the connection are as follows.

1. Clearance Request by Airlines : DANS(client) -> AODB(server)
- Airline users request daily flight permits through the web portal provided by the DANS
- DANS sends request information to AODB.
- Single transmission when a request occurs : [Clearance Request Data Object]
2. Clearance Approval/Reject by Air transport users : AODB(client) -> DANS(server)
- AODB transmits the information to DANS when an application is approved/rejected.
- Single transmission when a approval/rejection occurs : [Clearance Response Data Object]
3. Clearance Number Providing : DANS(client) <-> AODB(server)
- DANS system requests clearance number information from AODB based on timerange/date
- AODB sends a list of clearance numbers after closing the clearance data for the period
- Send list on DANS request : [Clearance Response Data Object]

8.2. AODB Side API List

No	API	HTTP Method	URI	Request Model	Response Model
1	Clearance Request	POST	/clearance/request	N/A	ClearanceRequest
2	Query refNo by date	POST	/clearance/refnolistByDate		ClearanceResponse
	Query refNo by timerange	POST	/clearance/refnolistByTimerange		ClearanceResponse

8.3. Clearance Portal Side API List

No	API	HTTP Method	URI	Request Model	Response Model
1	Clearance Approval	POST	/api/clearance/approval	N/A	ClearanceResponse

8.4. API Detail

8.4.1. Clearance Request API

Name	Clearance Request		HTTP Method	POST
Description	Clearance Portal system transmits Clearance Request information to AODB.			
Request	URL	http://{hostname}:{port}/clearance/request		
	Content Type	application/json	Model	N/A
	Query Params	N/A		
	Body(example)			


```
{
  "requestId": "ETD20211228161535262",
  "requestDate": "20211228",
  "airlineCodeIATA": "EY",
  "airlineCodeICAO": "ETD",
  "aircraftTypeICAO": "B738",
  "clientAddress": "MK AIRLINES LANDHURST HARTFIELD",
  "operatorName": "ETHAD AIRWAYS",
  "ownerName": "MK AIRLINES",
  "aircraftReg": "9GMKO",
  "callsign": "ETD555",
  "flightRoute": "HSSS-HUEN-HKJK",
  "arrivalDate": "20220105",
  "estimatedTimeArr": "1300",
  "departureDate": "20220105",
  "estimatedTimeDep": "1530",
  "entryPoint": "ATUGA",
  "exitPoint": "ALKON",
  "flightMode": "Departure",
  "typeOfMovement": "International",
  "typeOfFlight": "Scheduled Air Service ",
  "purposeOfFlight": "purpose",
  "flightCommander": "captain name",
  "detailPaxCargo": "general pax",
  "localAgent": "agent name",
  "consigner": "consigner name",
  "consignee": "consignee",
  "remarks": "some details",
  “mtow” : “12345”
```

	"documents": [
	{
	"requestId" : "ETD20211228161535262",
	"documentId" : "doc123456",
	"contentType" : "application/pdf",
	"data":"1!@#!!+adsFASDFADweQweQe ..."
	"hash" : "akdjljfaozoQWE!!aADFASF#$&%",
	"issuedDate" : "20211228",
	"expiryDate" : "20220128"
	}, { ... } , {.....}
	]
	}			

Response	Content Type	application/json	Model	N/A
	Body(example)			
	{ "code": 200, "data": "" }			

8.4.2. Query refNo list by date API

Name	Query refNo list by date		HTTP Method	POST
Description	Query Clearance refNo list by Arrival Date			
Request	URL	http://{hostname}:{port}/clearance/refnolistByDate		
	Content Type	application/json	Model	N/A
	Query Params	N/A		
	Body(example)			
	{ "date": "20220107", }			
Response	Content Type	application/json	Model	N/A
	Body(example)			
	[{ "requestId": "ETD20211228161535262", "requestDate": "20211228", "clearState": "A", "formDate": "20211229", "refNo": "CAA/UGD/20211229/003B", "airlineCodeICAO": "ETD", “airlineAddress”: “address”, "aircraftReg": "9GMKO", "callsign": "ETD555", "personnelOnDuty": "user name", "remarks": "some details", "operated": "Y", } , { }, …]			

8.4.3. Query refNo list by timerange API

Name	Query refNo list by timerange		HTTP Method	POST
Description	Query Clearance refNo list by Arrival Date timerange			
Request	URL	http://{hostname}:{port}/clearance/refnolistByTimerange		
	Content Type	application/json	Model	N/A
	Query Params	N/A		
	Body(example)			
	{ "fromDatetime":"202112290300", "toDatetime": "202112292300" }			
Response	Content Type	application/json	Model	N/A
	Body(example)			
	[{ "requestId": "ETD20211228161535262", "requestDate": "20211228", "clearState": "A", "formDate": "20211229", "refNo": "CAA/UGD/20211229/003B", "airlineCodeICAO": "ETD", "airlineAddress": "address", "aircraftReg": "9GMKO", "callsign": "ETD555", "personnelOnDuty": "user name", "remarks": "some details", "operated": "Y" } , { }, …]			

8.4.4. Clearance Approval API

Name	Sending Clearance approval/rejection		HTTP Method	POST
Description	When the air transport user approves/rejects the request, the corresponding information is sent to the clearance portal system.			
Request	URL	http://{hostname}:{port}/api/clearance/approval		
	Content Type	application/json	Model	N/A
	Query Params	N/A		
	Body(example)			

	{
	"requestId": "ETD20211228161535262",
	"requestDate": "20211228",
	"clearState": "A",
	"formDate": "20211229",
	"refNo": "CAA/UGD/20211229/003B",
	"airlineCodeICAO": "ETD",
	"aircraftReg": "9GMKO",
	"callsign": "ETD555",
	"personnelOnDuty": "user name",
	"remarks": "reject reason",
	"operated": ""
	}			

Response	Content Type	application/json	Model	N/A
	Body(example)			
	{ "code": 200, "data": "" }			

8.4.5. Single aircraft Info API

Name	Query Aircraft Info by regNo		HTTP Method	POST
Description	Query a aircraft Information by registration number			
Request	URL	http://{hostname}:{port}/api/clearance/aircraftbyregno		
	Content Type	application/json	Model	N/A
	Query Params	N/A		
	Body(example)			
	{ "aircraftReg": "9GMKO" }			
Response	Content Type	application/json	Model	AircraftInfo
	Body(example)			
	{ "aircraftReg": "9GMKO", "aircraftTypeIcao": "B738", "mtow": "12345", }			

8.4.6. Aircraft Info list API

Name	Query Aircraft Info list		HTTP Method	POST
Description	Query a aircraft Information list			
Request	URL	http://{hostname}:{port}/api/clearance/aircraftlist		
	Content Type	application/json	Model	N/A
	Query Params	N/A		
	Body(example)			
Response	Content Type	application/json	Model	AircraftInfo
	Body(example)			
	[{ "aircraftReg": "9GMKO", "aircraftTypeIcao": "B738", "mtow": "12345", } , { }, { }, { } ...]			

8.5. Data Model Definition

This section defines the type and properties of the Model constituting each API response message body The data type is written based on the format provided by the Clearance Portal system.

8.5.1 ClearanceRequest

Field	Type	Description	Remark
requestId	TEXT	ICAO Code + 'YYYYMMDDHH24MISS' + Random 3digit number	Total length 20
requestDate	TEXT	YYYYMMDD	
airlineCodeIATA	TEXT	2~3 digit	
airlineCodeICAO	TEXT	3 digit	
aircraftTypeICAO	TEXT		
clientAddress	TEXT	Airline address	
operatorName	TEXT	Airline name	
ownerName	TEXT	Airline owner name	
aircraftReg	TEXT	Aircraft registration	
callsign	TEXT	ICAO code + Flight number	
flightRoute	TEXT	Route of flight	
arrivalDate	TEXT	YYYYMMDD	
estimatedTimeArr	TEXT	HH24MI	
departureDate	TEXT	YYYYMMDD	
estimatedTimeDep	TEXT	HH24MI	
entryPoint	TEXT		
exitPoint	TEXT		
flightMode	TEXT	A : Arrival, D : Departure, O : Overflight T : Training	Same values with DANS ATC
typeOfMovement	TEXT	I : International D : Domestic	
typeOfFlight	TEXT	One of the following values • S : Scheduled Air Service • N : Non-scheduled Air Operation • G : General Aviation	AODB can provide coded values to use

		• M : Military • D : Diplomatic/VIP • X : Others	
purposeOfFlight	TEXT		
flightCommander	TEXT	Captain name	
detailPaxCargo	TEXT	Brief details of Cargo and Passengers	
localAgent	TEXT		
consigner	TEXT		
consignee	TEXT		
remarks	TEXT	Some details	
mtow	NUMBER	Maximum take off weight	
documents	OBJECT[]	Clearance document	Documents

8.5.2 ClearanceResponse

Field	Type	Description	Remark
requestId	TEXT	ICAO Code + 'YYYYMMDDHH24MISS' + Random 3digit number	Total length 20
requestDate	TEXT	YYYYMMDD	
clearState	TEXT	A : approval, C : reject	R : request
formDate	TEXT	YYYYMMDD, Clearance date	
refNo	TEXT	Clearance reference number CAA/UGD/[Clearance date] /[sequence] + [user indicator]	
airlineCodeICAO	TEXT	3 digit	
callsign	TEXT		
aircraftReg	TEXT		
personnelOnDuty	TEXT	User name	
remarks	TEXT	Some details	If rejected, reason for reject will be added
operated	TEXT	Y : Operated, N : no operation	Check the operation status by the existence of required input values according to flightMode

8.5.3 Documents

Field	Type	Description	Remark
requestId	TEXT	ICAO Code + 'YYYYMMDDHH24MISS' + Random 3digit number	Total length 20
documentId	TEXT	doc1~10	
contentType	TEXT	application/pdf	
size	TEXT	YYYYMMDD, Clearance date	
data	TEXT	Base64String	
hash	TEXT		
issuedDate	TEXT	YYYYMMDD	
expiryDate	TEXT	YYYYMMDD	

8.5.4 AircraftInfo

Field	Type	Description	Remark
aircraftReg	TEXT		
aircraftTypeIcao	TEXT		
mtow	NUMBER	Maximum take off weight	

9. Statistics API

9.1. Overview

T.B.D

9.2. API List

No	API	HTTP Method	URI	Request Model	Response Model
1	Air Traffic info	GET	/report/airtraffic	N/A	AirtrafficInfo

9.3. API Detail

9.3.1. AirTraffic API

Name	Air Traffic info		HTTP Method	GET
Description	When IBIS information is generated, the SITREP system transmits it to the AODB, and the AODB receives it and converts and stores it according to the Wildlife module.			
Request	URL	http://{hostname}:{port}/report/airtraffic-record		
	Content Type	application/json	Model	N/A
	Query Params	N/A		
	Body(example)			
	{ "fromDate":"20210804", "toDate": "20210804" }			
Response	Content Type	application/json	Model	N/A
	Body(example)			
	[{ "flightDate": "04/08/2021", "operator": "Kenya Airways", "aircraftType": "B738", "registration": "5YCYA", "movementType": "Scheduled Air Service", "serviceNumber": "KQA413", "origin": null, "destination": "HKJK", "category": "INTERNATIONAL", "ETAD": "04:25", "ATAD": "02:37", "pob": "111", "disem": null, "trst": 4, "embarking": 107, "unloaded": null, "loaded": 22211, "mailIn": null, "mailOut": null },			

	{ … }, { … }, …]

9.4. Data Model Definition

9.4.1 airTrafficInfo

Field	Type	Description	Remark
flightDate	TEXT	DD/MM/YYYY	MAX 10
operator	TEXT	Name of aircraft operator	MAX 50
aircraftType	TEXT	ICAO code of aircraft type	MAX 8
registration	TEXT	Aircraft registration	MAX 12
movementType	TEXT	1-SCHEDULE 2-CHARTERS 3-FREIGHTERS/CARGO 4-NON COMMERCIAL 5-TRAINING/TEST 6-PRIVATE 7-MILITARY 8-OTHER NON COMMERCIAL	MAX 50
serviceNumber	TEXT	Airline ICAO CODE + Flight number	MAX 15
origin	TEXT	Origin Airport ICAO CODE, 4 letter	If this is not null, it is arrival flight, MAX 4
destination	TEXT	Destination Airport ICAO CODE, 4 letter	If this is not null, it is departure flight, MAX 4
category	TEXT	INTERNATIONAL or DOMESTIC	
ETAD	TEXT	Estimated Time of Arrival/Departure HH:mm (24 base)	MAX 5
ATAD	TEXT	Actual Time of Arrival/Departure HH:mm (24 base)	MAX 5
pob	NUMBER		MAX 3
disem	NUMBER		MAX 3
trst	NUMBER		MAX 3
embarking	NUMBER		MAX 3
unloaded	NUMBER	Included " . "	MAX 20
loaded	NUMBER	Included " . "	MAX 20
mailIn	NUMBER	Included " . "	MAX 20
mailOut	NUMBER	Included " . "	MAX 20