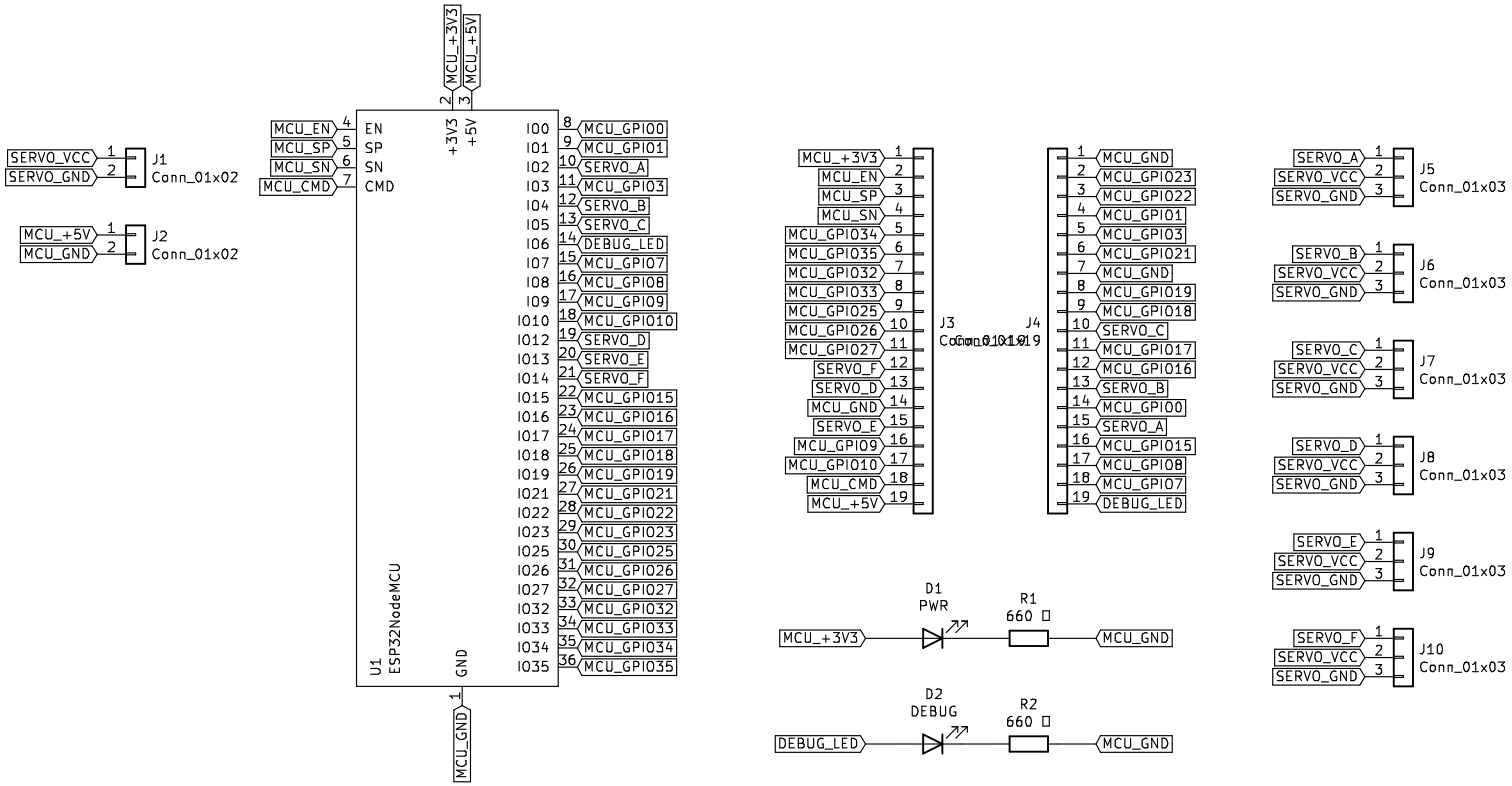

Sheet: /
File: WifiServoBridge.sch

Title:

Size: A4	Date:	Rev:
KiCad E.D.A. kicad 5.1.10-88a1d61d5890ubuntu20.04.1		Id: 1/1