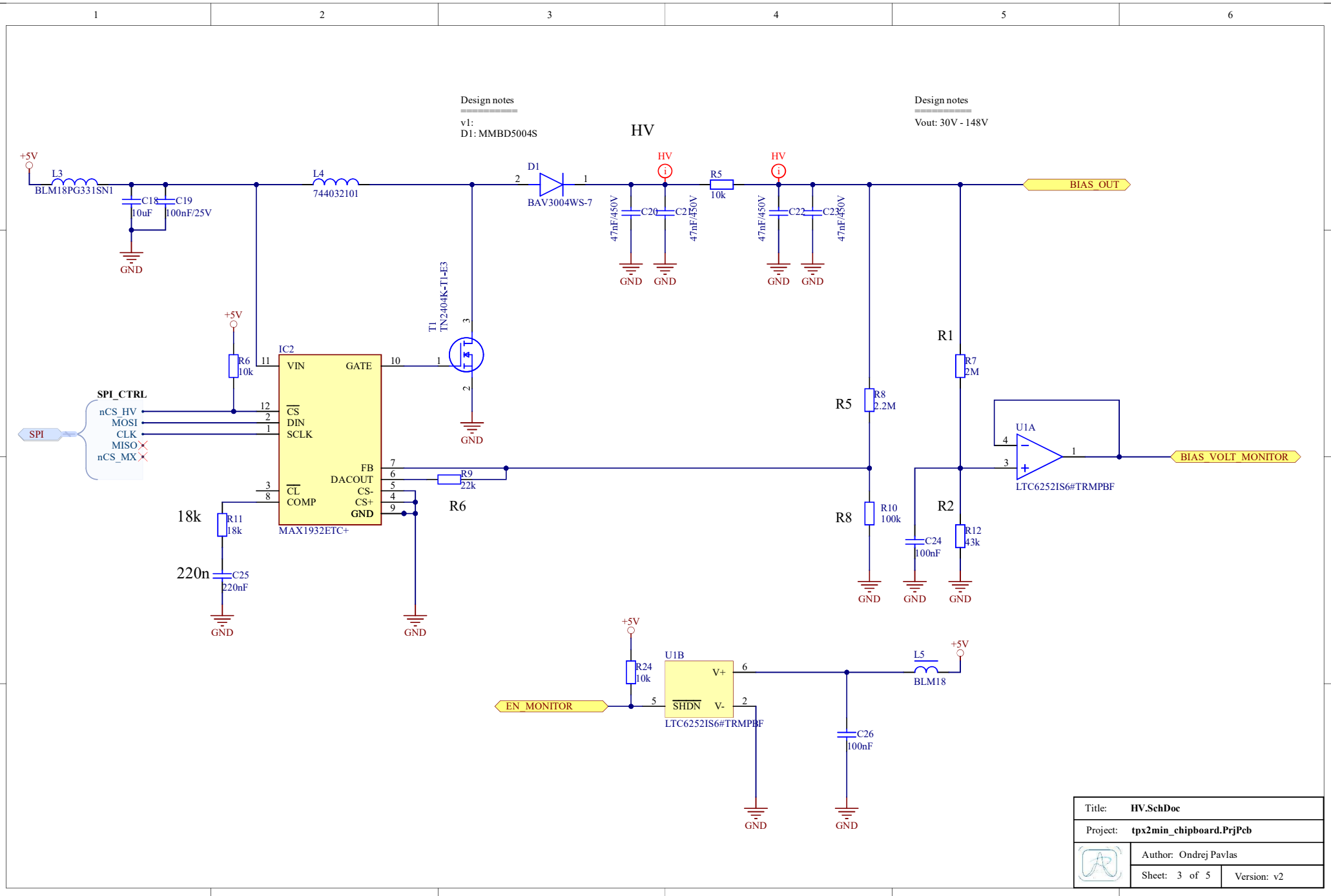

Title:	HV.SchDoc
Project:	tpx2min_chipboard.PrjPcb
Author: Ondrej Pavlas	
Sheet: 3 of 5	Version: v2