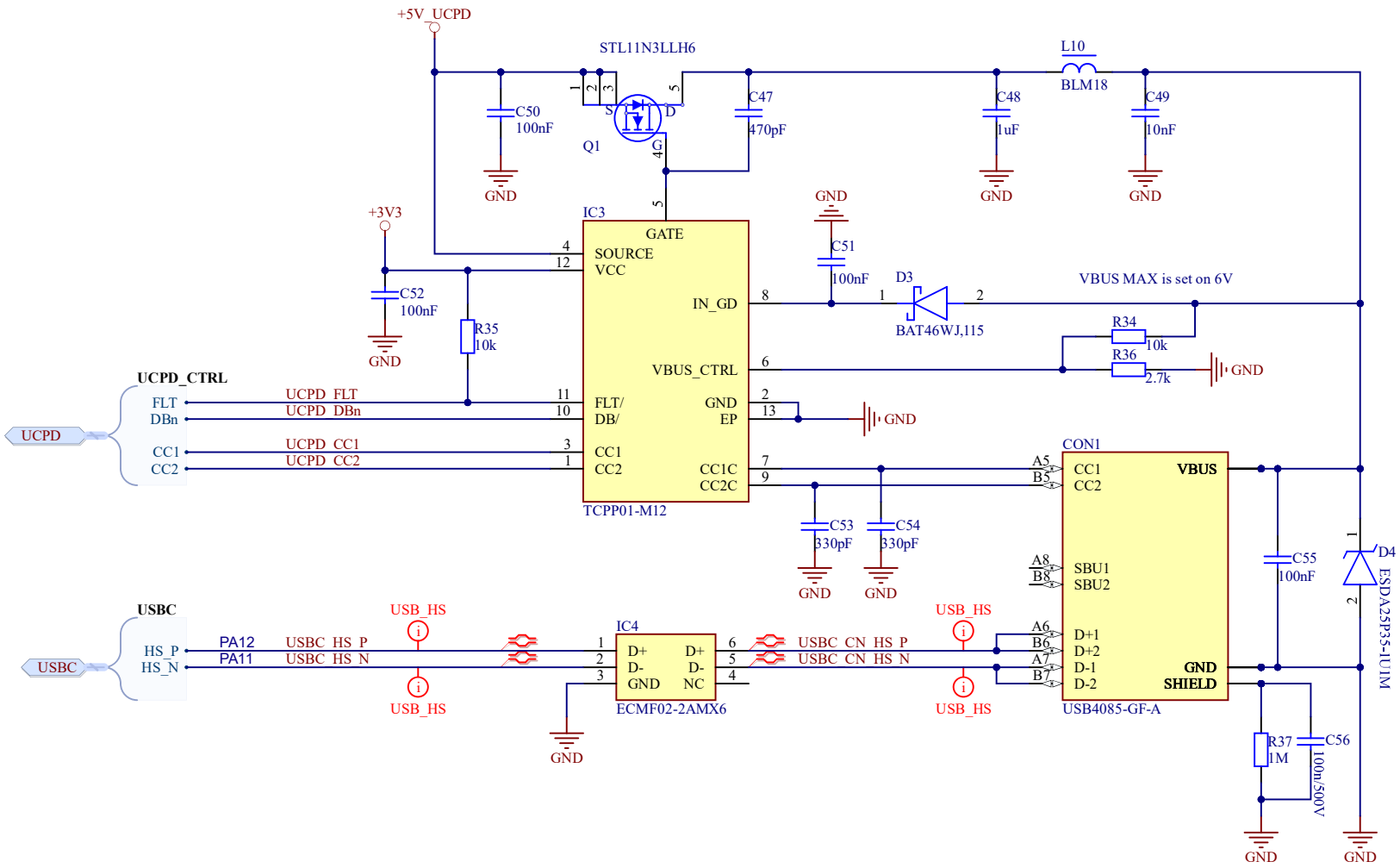

Title:	USBHS_TYPEC.SchDoc
Project:	tpx2min.PrjPcb
Author: Ondrej Pavlas	
Sheet: 8 of 8	Version: v2