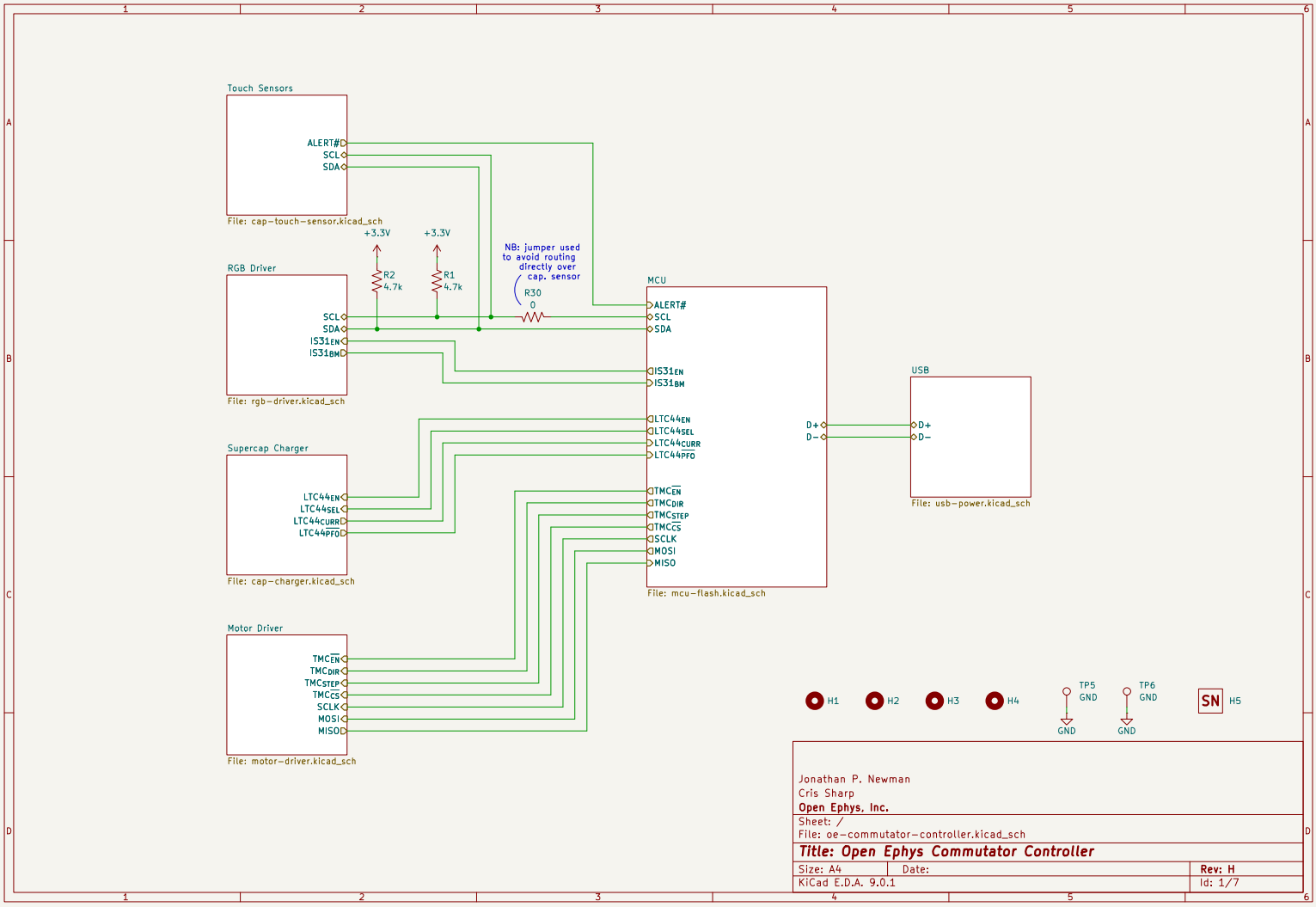
Touch Sensors
ALERT#
SCL
SDA
File: cap-touch-sensor.kicad_sch
+3.3V
+3.3V
R2
4.7k
R1
4.7k
NB: jumper used to avoid routing directly over cap. sensor
R30
0
RGB Driver
SCL
SDA
IS31EN
IS31BM
File: rgb-driver.kicad_sch
MCU
ALERT#
SCL
SDA
IS31EN
IS31BM
LTC44EN
LTC44SEL
LTC44CURR
LTC44PFO
TMCEN
TMCDIR
TMCSTEP
TMCCS
SCLK
MOSI
MISO
D+
D-
File: mcu-flash.kicad_sch
USB
D+
D-
File: usb-power.kicad_sch
Supercap Charger
LTC44EN
LTC44SEL
LTC44CURR
LTC44PFO
File: cap-charger.kicad_sch
Motor Driver
TMCEN
TMCDIR
TMCSTEP
TMCCS
SCLK
MOSI
MISO
File: motor-driver.kicad_sch
H1
H2
H3
H4
TP5
GND
TP6
GND
SN
H5
Jonathan P. Newman
Cris Sharp
Open Ephys, Inc.
Sheet: /
File: oe-commutator-controller.kicad_sch
Title: Open Ephys Commutator Controller
Size: A4
Date:
Rev: H
KiCad E.D.A. 9.0.1
Id: 1/7

rp2040 hardware design guide pdf:
https://datasheets.raspberrypi.com/rp2040/hardware-design-with-rp2040.pdf
minimial viable rp2040 design kicad project:
https://www.raspberrypi.com/documentation/microcontrollers/silicon.html#design-files

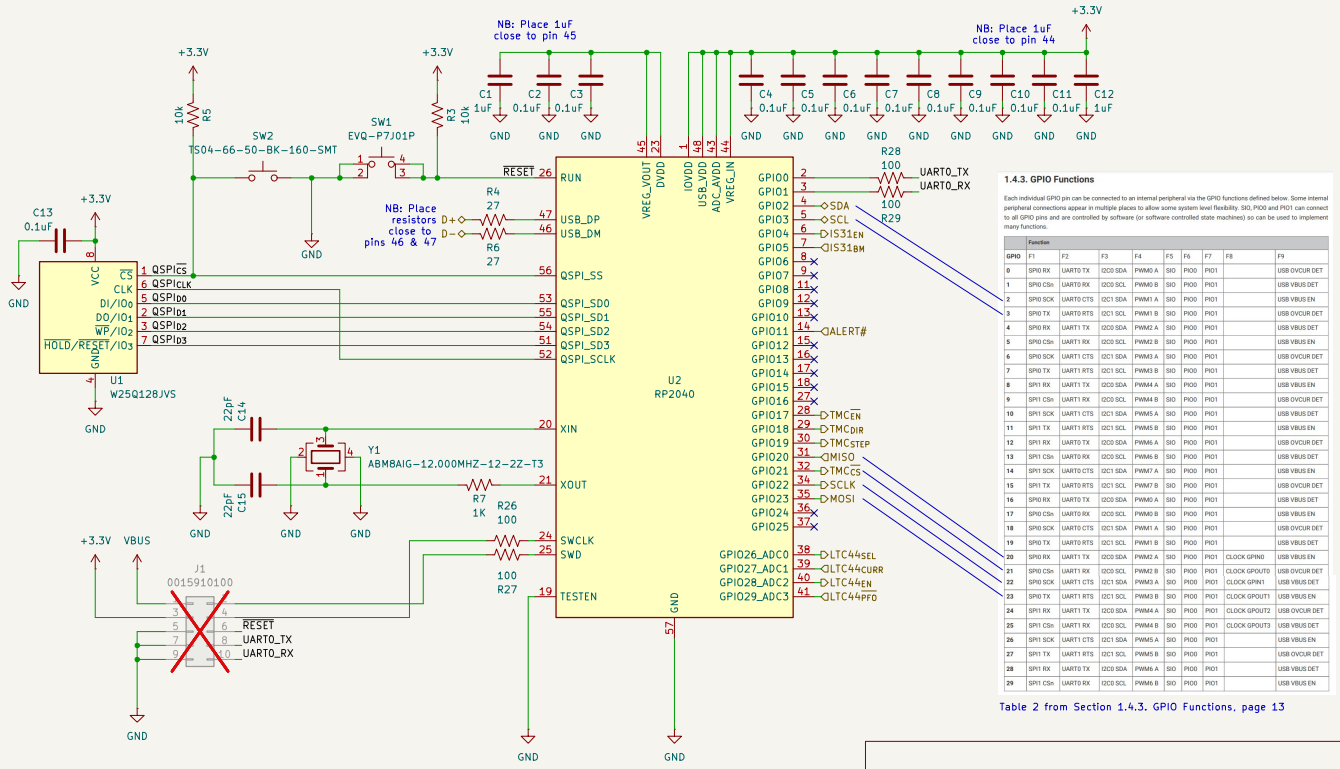

1.4.3. GPIO Functions

Each individual GPIO pin can be connected to an internal peripheral via the GPIO functions defined below. Some internal peripheral connections appear in multiple places to allow some system level flexibility. SIO, PIO0 and PIO1 can connect to all GPIO pins and are controlled by software (or software controlled state machines) so can be used to implement many functions.

	Function								
GPIO	F1	F2	F3	F4	F5	F6	F7	F8	F9
0	SPI0 RX	UART0 TX	I2C0 SDA	PWM0 A	SIO	PIO0	PIO1		USB OVCUR DET
1	SPI0 CSn	UART0 RX	I2C0 SCL	PWM0 B	SIO	PIO0	PIO1		USB VBUS DET
2	SPI0 SCK	UART0 CTS	I2C1 SDA	PWM1 A	SIO	PIO0	PIO1		USB VBUS EN
3	SPI0 TX	UART0 RTS	I2C1 SCL	PWM1 B	SIO	PIO0	PIO1		USB OVCUR DET
4	SPI0 RX	UART1 TX	I2C0 SDA	PWM2 A	SIO	PIO0	PIO1		USB VBUS DET
5	SPI0 CSn	UART1 RX	I2C0 SCL	PWM2 B	SIO	PIO0	PIO1		USB VBUS EN
6	SPI0 SCK	UART1 CTS	I2C1 SDA	PWM3 A	SIO	PIO0	PIO1		USB OVCUR DET
7	SPI0 TX	UART1 RTS	I2C1 SCL	PWM3 B	SIO	PIO0	PIO1		USB VBUS DET
8	SPI1 RX	UART1 TX	I2C0 SDA	PWM4 A	SIO	PIO0	PIO1		USB VBUS EN
9	SPI1 CSn	UART1 RX	I2C0 SCL	PWM4 B	SIO	PIO0	PIO1		USB OVCUR DET
10	SPI1 SCK	UART1 CTS	I2C1 SDA	PWM5 A	SIO	PIO0	PIO1		USB VBUS DET
11	SPI1 TX	UART1 RTS	I2C1 SCL	PWM5 B	SIO	PIO0	PIO1		USB VBUS EN
12	SPI1 RX	UART0 TX	I2C0 SDA	PWM6 A	SIO	PIO0	PIO1		USB OVCUR DET
13	SPI1 CSn	UART0 RX	I2C0 SCL	PWM6 B	SIO	PIO0	PIO1		USB VBUS DET
14	SPI1 SCK	UART0 CTS	I2C1 SDA	PWM7 A	SIO	PIO0	PIO1		USB VBUS EN
15	SPI1 TX	UART0 RTS	I2C1 SCL	PWM7 B	SIO	PIO0	PIO1		USB OVCUR DET
16	SPI0 RX	UART0 TX	I2C0 SDA	PWM0 A	SIO	PIO0	PIO1		USB VBUS DET
17	SPI0 CSn	UART0 RX	I2C0 SCL	PWM0 B	SIO	PIO0	PIO1		USB VBUS EN
18	SPI0 SCK	UART0 CTS	I2C1 SDA	PWM1 A	SIO	PIO0	PIO1		USB OVCUR DET
19	SPI0 TX	UART0 RTS	I2C1 SCL	PWM1 B	SIO	PIO0	PIO1		USB VBUS DET
20	SPI0 RX	UART1 TX	I2C0 SDA	PWM2 A	SIO	PIO0	PIO1	CLOCK GPIN0	USB VBUS EN
21	SPI0 CSn	UART1 RX	I2C0 SCL	PWM2 B	SIO	PIO0	PIO1	CLOCK GPOUT0	USB OVCUR DET
22	SPI0 SCK	UART1 CTS	I2C1 SDA	PWM3 A	SIO	PIO0	PIO1	CLOCK GPIN1	USB VBUS DET
23	SPI0 TX	UART1 RTS	I2C1 SCL	PWM3 B	SIO	PIO0	PIO1	CLOCK GPOUT1	USB VBUS EN
24	SPI1 RX	UART1 TX	I2C0 SDA	PWM4 A	SIO	PIO0	PIO1	CLOCK GPOUT2	USB OVCUR DET
25	SPI1 CSn	UART1 RX	I2C0 SCL	PWM4 B	SIO	PIO0	PIO1	CLOCK GPOUT3	USB VBUS DET
26	SPI1 SCK	UART1 CTS	I2C1 SDA	PWM5 A	SIO	PIO0	PIO1		USB VBUS EN
27	SPI1 TX	UART1 RTS	I2C1 SCL	PWM5 B	SIO	PIO0	PIO1		USB OVCUR DET
28	SPI1 RX	UART0 TX	I2C0 SDA	PWM6 A	SIO	PIO0	PIO1		USB VBUS DET
29	SPI1 CSn	UART0 RX	I2C0 SCL	PWM6 B	SIO	PIO0	PIO1		USB VBUS EN

Table 2 from Section 1.4.3. GPIO Functions, page 13

Jonathan P. Newman
Cris Sharp
Open Ephys, Inc.

Sheet: /MCU/
File: mcu-flash.kicad_sch

Title: Open Ephys Commutator Controller

Size: A4	Date:	Rev: H
KiCad E.D.A. 9.0.1		Id: 2/7

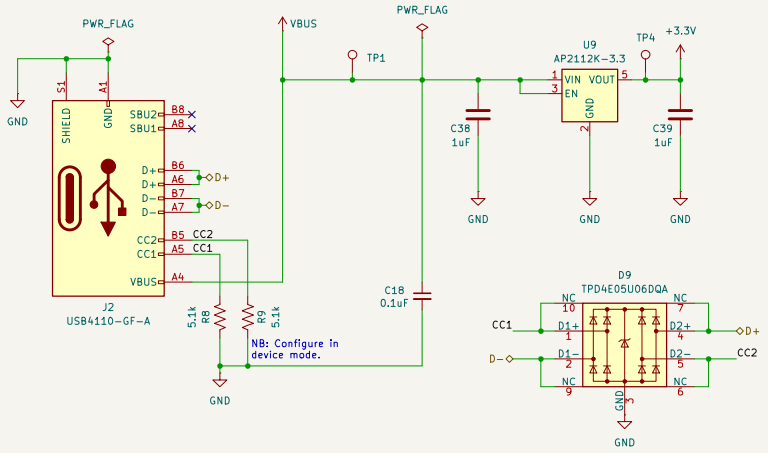

Jonathan P. Newman
Cris Sharp
Open Ephys, Inc.

Sheet: /USB/
File: usb-power.kicad_sch

Title: Open Ephys Commutator Controller

Size: A4	Date:	**Rev: G**
KiCad E.D.A. 9.0.1		Id: 3/7

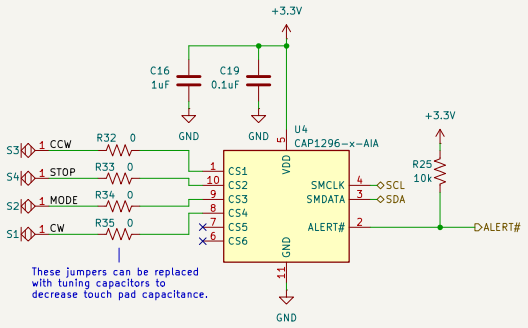

Jonathan P. Newman
Cris Sharp
Open Ephys, Inc.

Sheet: /Touch Sensors/
File: cap-touch-sensor.kicad_sch

Title: Open Ephys Commutator Controller

Size: A4	Date:	**Rev: G**
KiCad E.D.A. 9.0.1		Id: 4/7

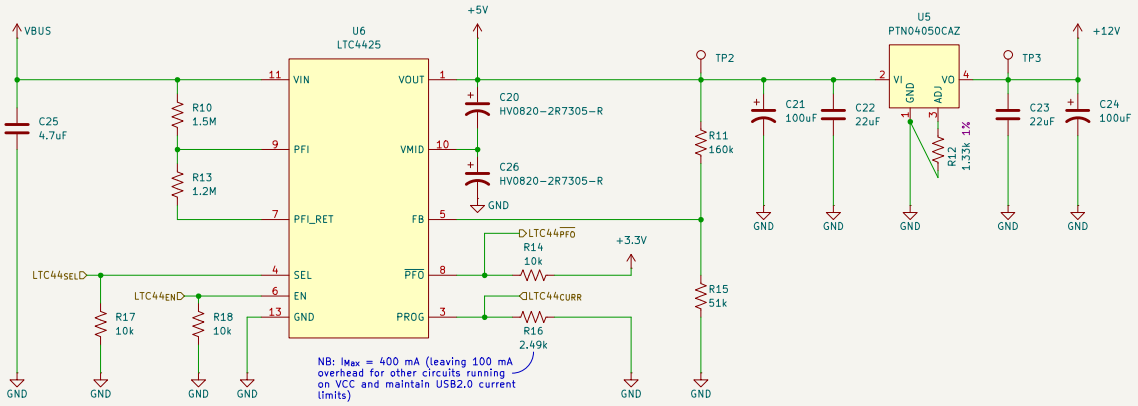

Jonathan P. Newman
Cris Sharp
Open Ephys, Inc.

Sheet: /Supercap Charger/
File: cap-charger.kicad_sch

Title: Open Ephys Commutator Controller

Size: A4	Date:	**Rev: G**
KiCad E.D.A. 9.0.1		Id: 5/7

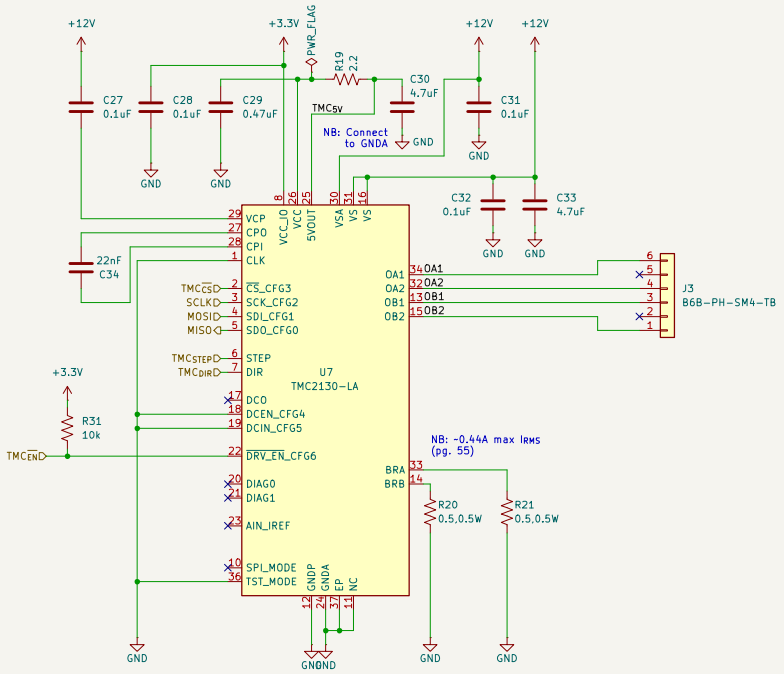

Jonathan P. Newman
Cris Sharp
Open Ephys, Inc.

Sheet: /Motor Driver/
File: motor-driver.kicad_sch

Title: Open Ephys Commutator Controller

Size: A4	Date:	**Rev: G**
KiCad E.D.A. 9.0.1		Id: 6/7

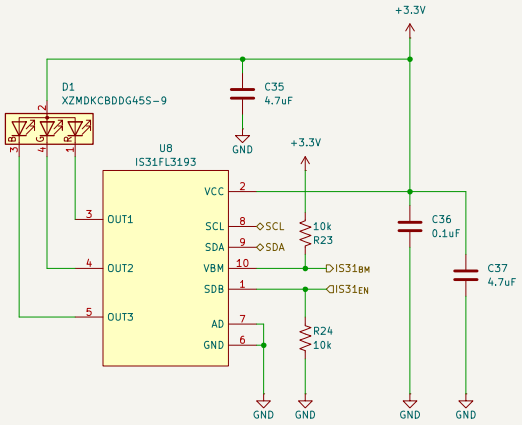

Jonathan P. Newman
Cris Sharp
Open Ephys, Inc.

Sheet: /RGB Driver/
File: rgb-driver.kicad_sch

Title: Open Ephys Commutator Controller

Size: A4	Date:	**Rev: G**
KiCad E.D.A. 9.0.1		Id: 7/7