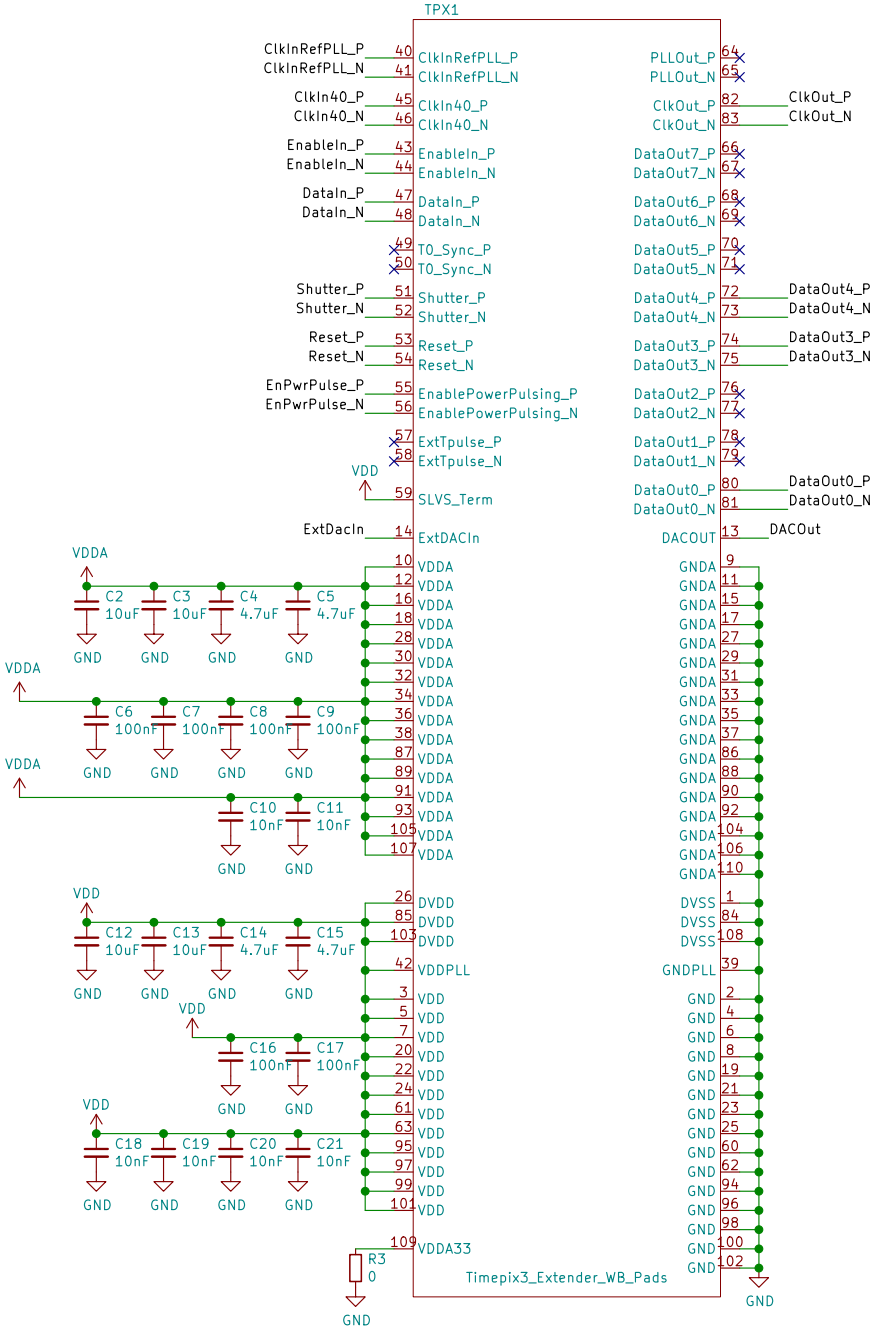

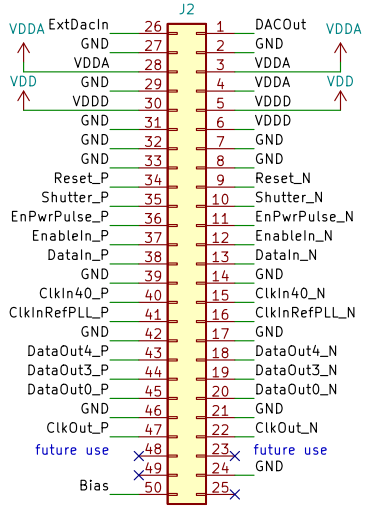

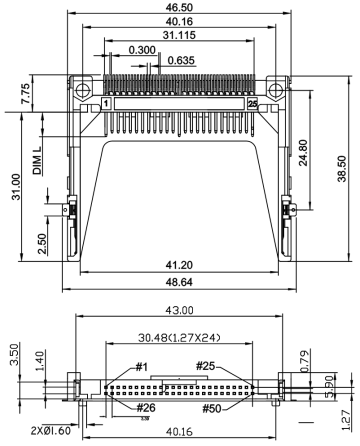

CF card socket (with pins):
Amphenol part nr. 10044078-E050LF
CF card receptable:
Hirose MI20-50RD-SF(51)

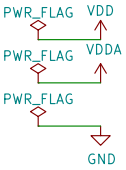

optional bias filter if not on mainboard
choose R&C as low pass @1-2 Hz
remove R1 if bias is supplied via J1

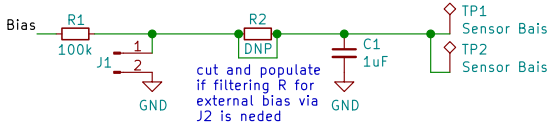

cut and populate
if filtering R for
external bais via
J2 is neded

H1
WE 9774015633

H2
WE 9774015633

FID1
Fiducial

FID2
Fiducial

FID3
Fiducial

Oliver Keller

CERN Open Hardware License

Sheet: /
File: TPX3_CF_chipcard.kicad_sch

Title: Timepix3 CompactFlash chipcard

Size: A4	Date: 2020-04-30	**Rev: 1**
KiCad E.D.A. kicad 5.99.0-unknown-64afa3a42e128ubuntu20.04.1		Id: 1/1