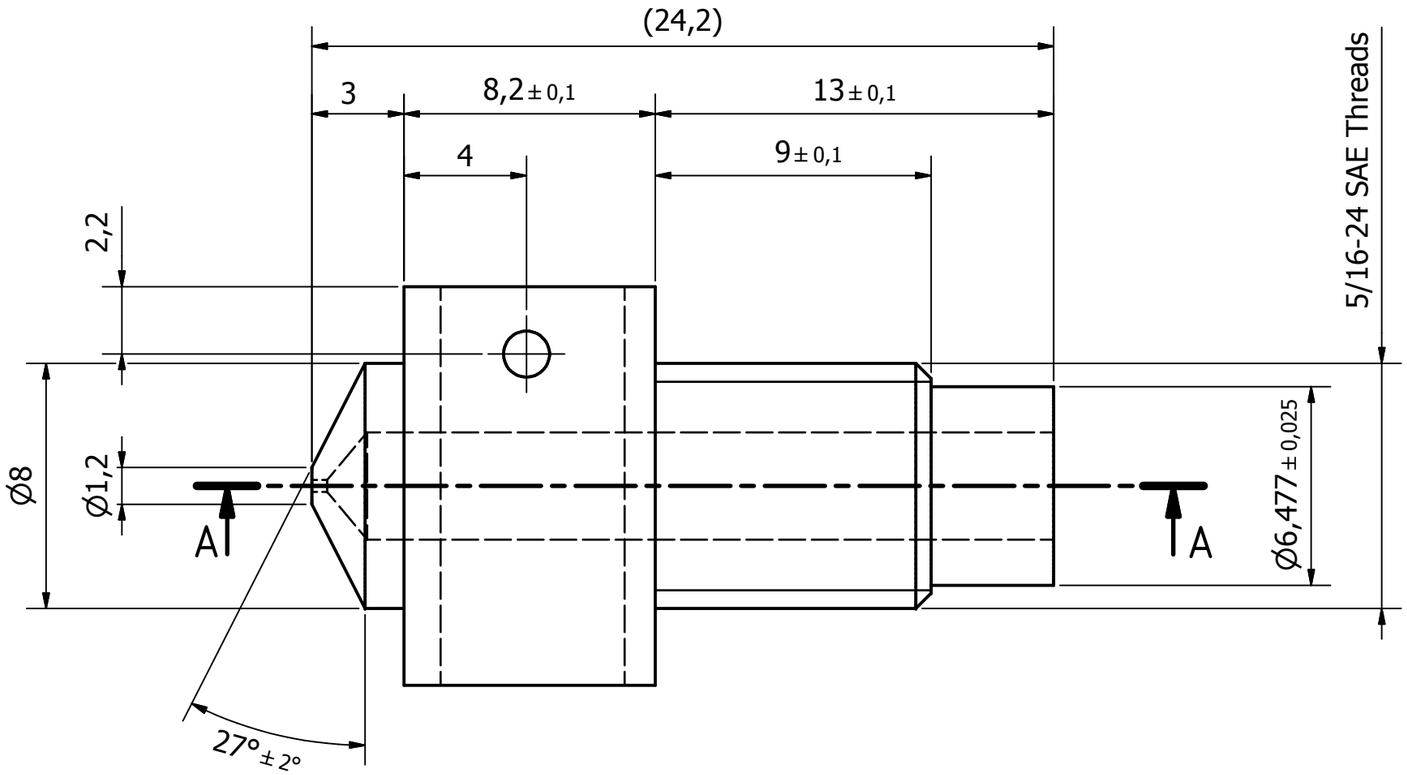

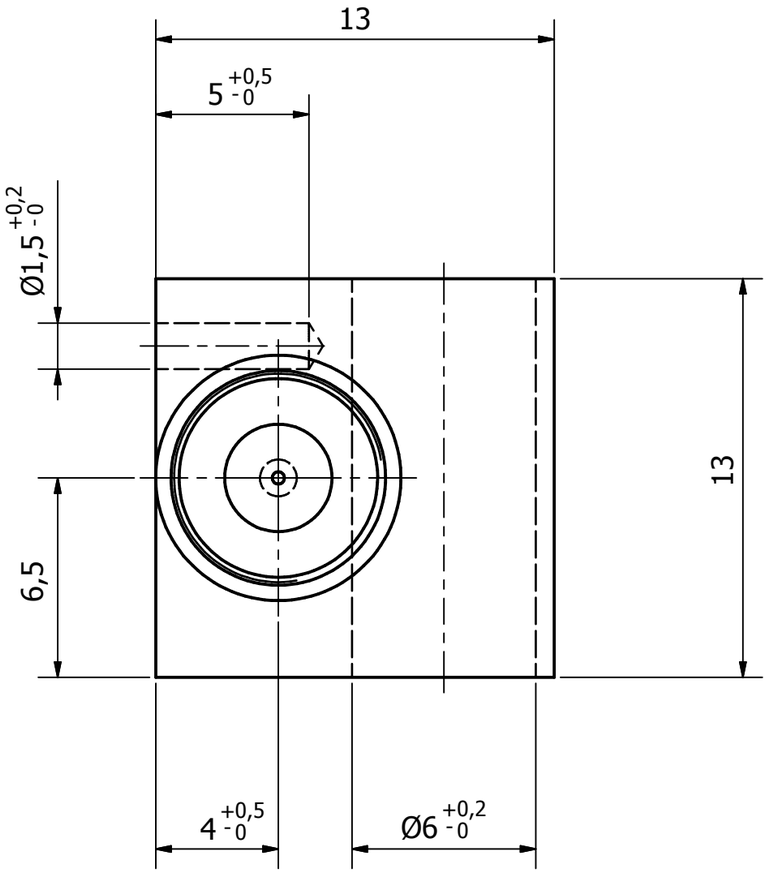

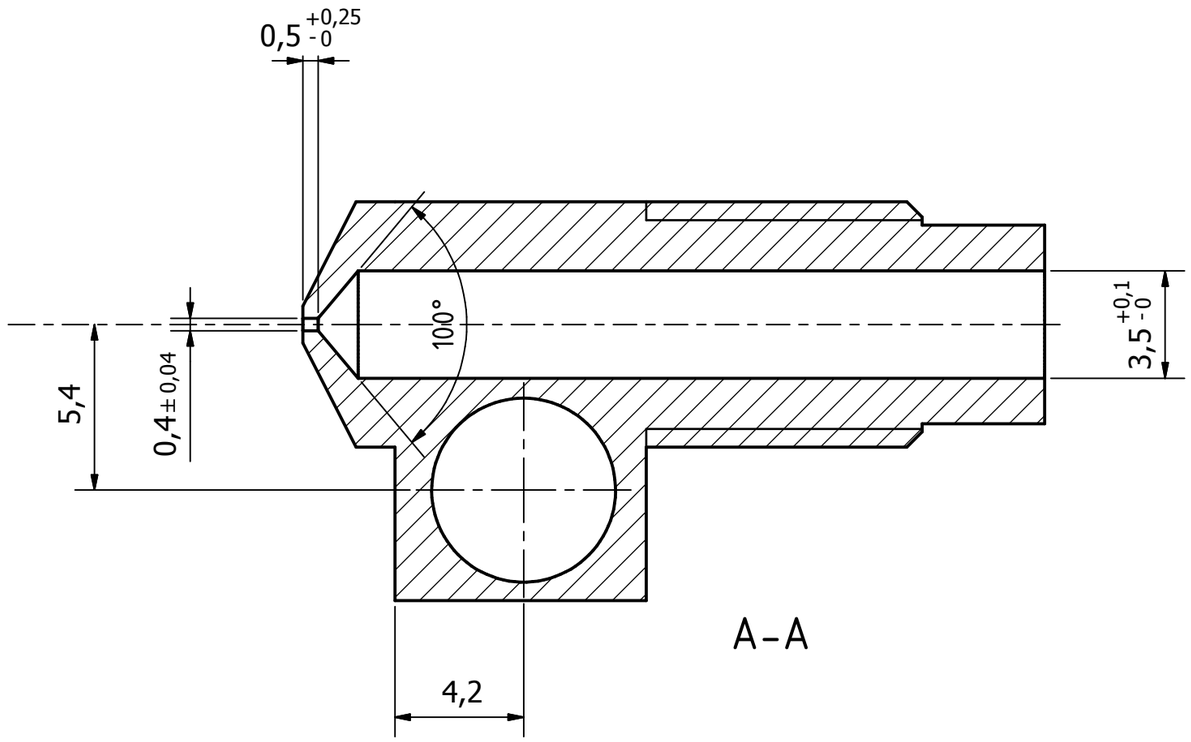

A-A

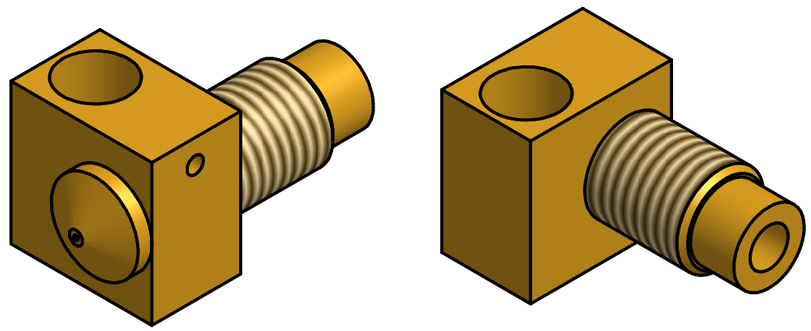

Date: 22-12-2012

Break Sharp Edges 0.2 x 45°

RepRap
OPEN 3D ENGINEERING

Material: CuZn39Pb3 (Brass)	Gen. Tolerances: 0.2 mm	Drawing by: Bram de Vries	
Partname: Nozzle V.5 3mm		Design Credits: Brian Reifsnyder	License: GNU
		Source URL: http://reprap.org/wiki/J_Head_Nozzle	
Assembly: J Head Nozzle Mk VBV		Scale: 5:1	3rd angle projection
		Units: MM	Sheet: A3