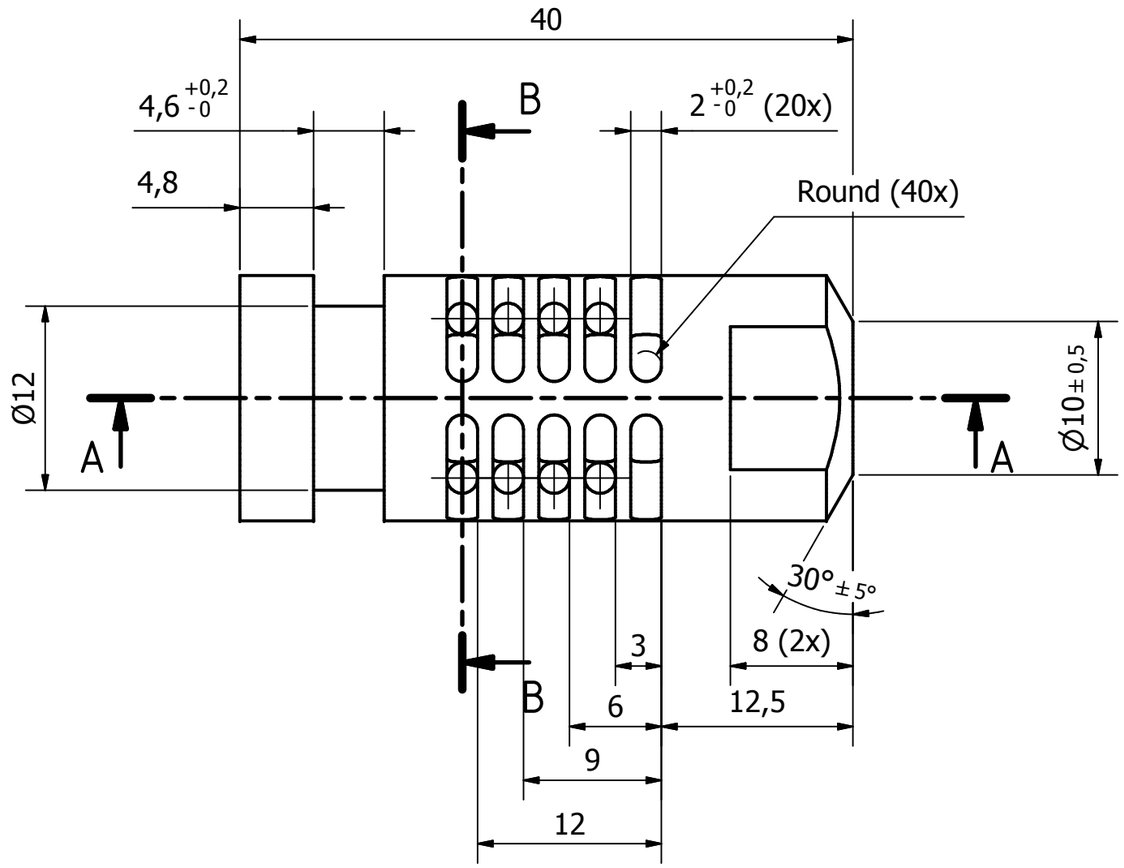


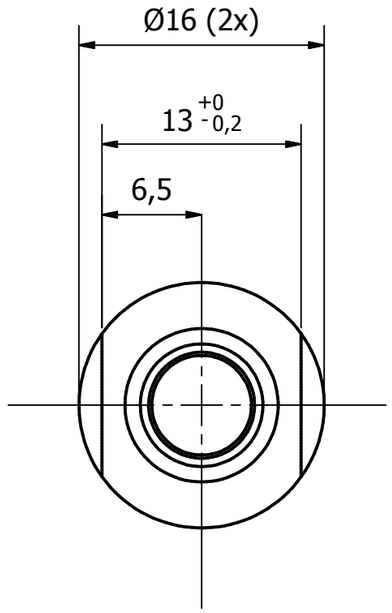


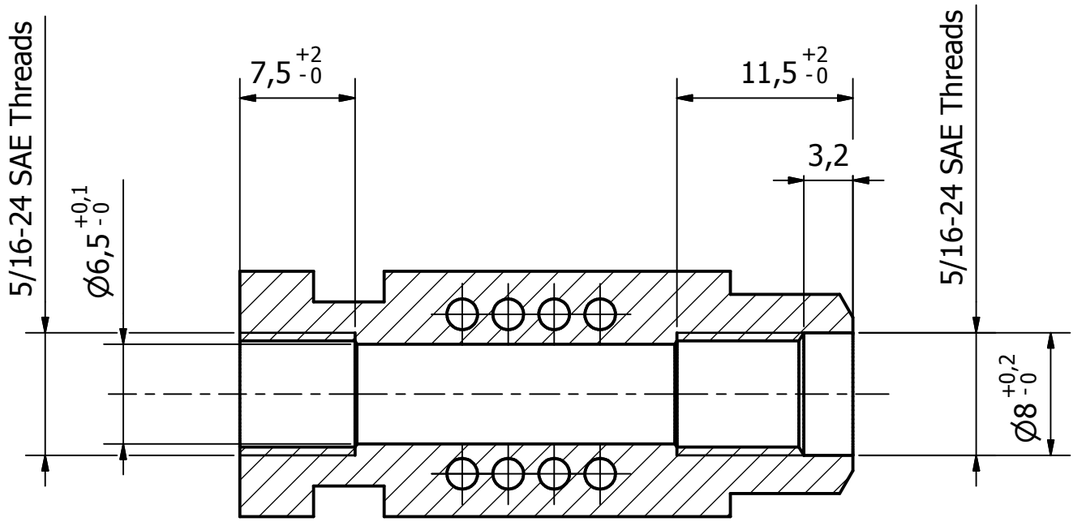


A–A

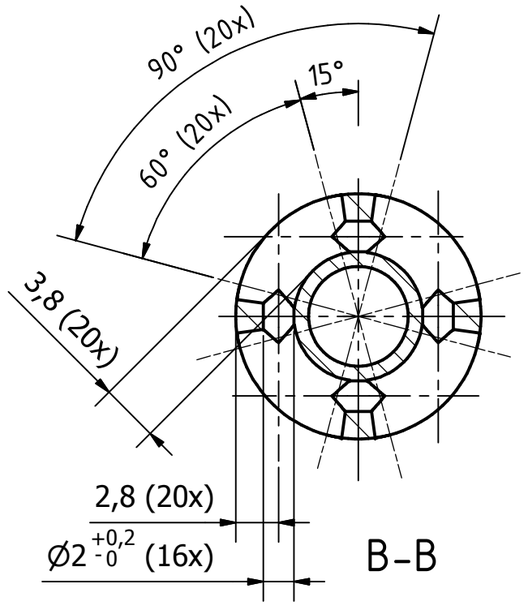


B–B

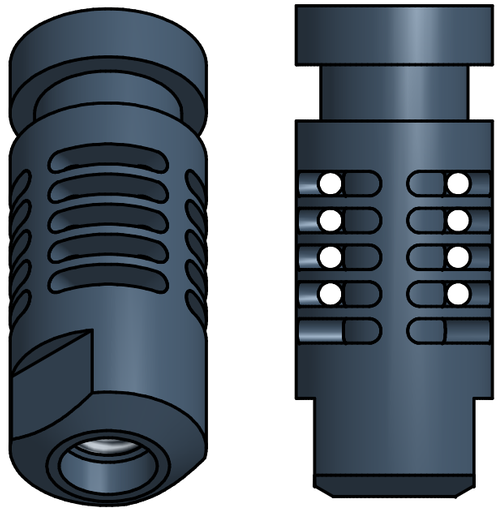

Date: 22-12-2012

Break Sharp Edges 0.2 x 45°

RepRap
OPEN 3D ENGINEERING

| | | | |
|---|---|---|---|
| Material: PEEK (Black) | Gen. Tolerances: 0.2 mm | Drawing by: Bram de Vries | |
| Partname: Nozzle Holder V.5 3mm | | Design Credits: Brian Reifsnyder | License: GNU |
| | | Source URL: http://reprap.org/wiki/J_Head_Nozzle | |
| Assembly: J Head Nozzle Mk VBV | | Scale: 2.5:1 | 3rd angle projection |
| | | Units: MM | Sheet: A3 |