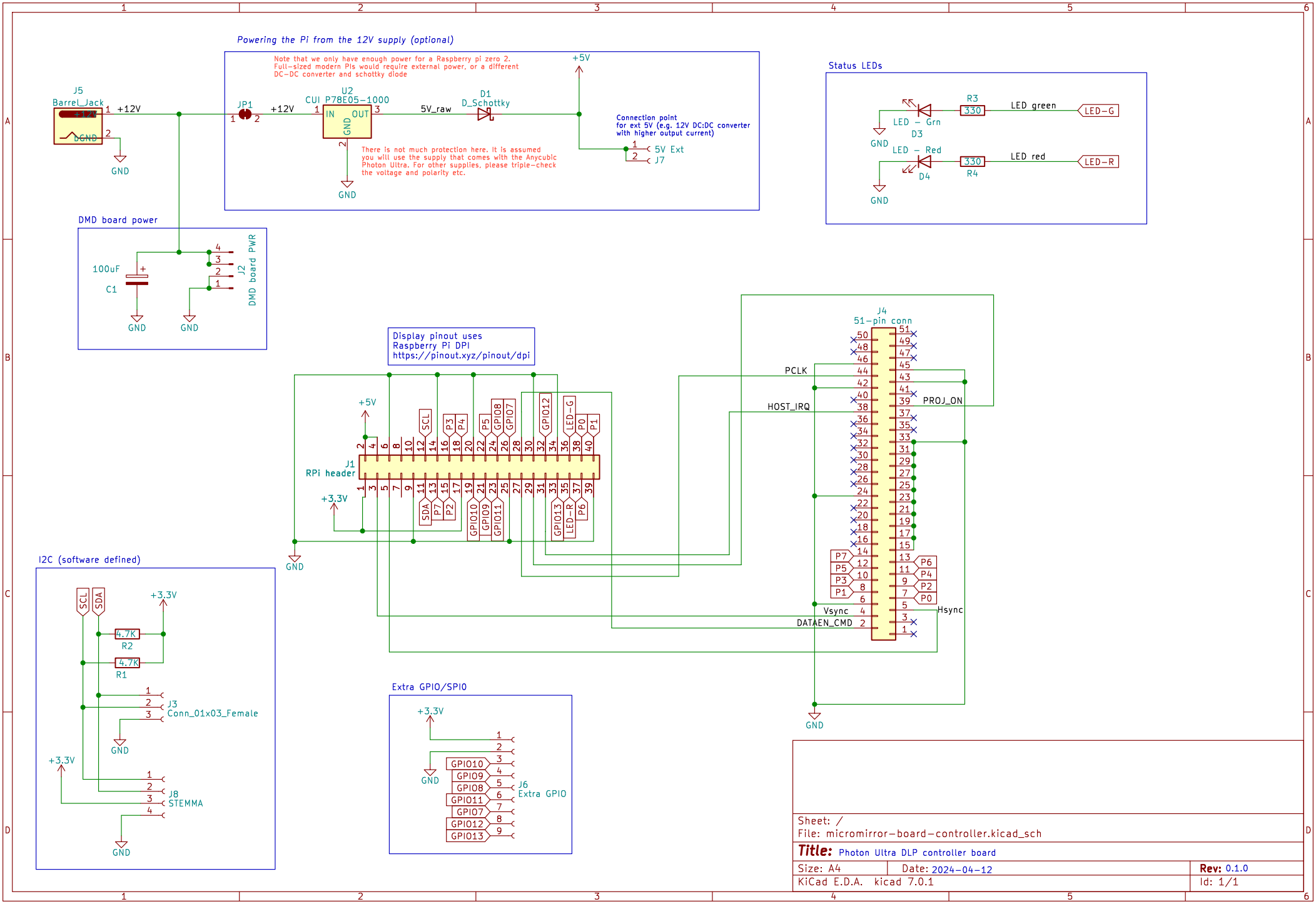
Powering the Pi from the 12V supply (optional)
Note that we only have enough power for a Raspberry pi zero 2. Full-sized modern Pis would require external power, or a different DC-DC converter and schottky diode
J5
Barrel_Jack
+12V
GND
JP1
U2
CUI P78E05-1000
IN
OUT
GND
5V_raw
D1
D_Schottky
+5V
Connection point for ext 5V (e.g. 12V DC:DC converter with higher output current)
5V Ext
J7
There is not much protection here. It is assumed you will use the supply that comes with the Anycubic Photon Ultra. For other supplies, please triple-check the voltage and polarity etc.
Status LEDs
R3
330
LED green
LED-G
LED - Grn
D3
LED - Red
D4
R4
LED red
LED-R
DMD board power
100uF
C1
J2
DMD board PWR
Display pinout uses Raspberry Pi DPI https://pinout.xyz/pinout/dpi
J1
RPi header
+3.3V
SCL
SDA
P3
P4
P5
P7
P2
GPIO8
GPIO7
GPIO12
GPIO10
GPIO9
GPIO11
GPIO13
LED-R
P6
LED-G
P0
P1
J4
51-pin conn
PCLK
HOST_IRQ
PROJ_ON
Vsync
Hsync
DATAEN_CMD
I2C (software defined)
4.7K
R2
R1
J3
Conn_01x03_Female
J8
STEMMA
Extra GPIO/SPIO
J6
Extra GPIO
Sheet: /
File: micromirror-board-controller.kicad_sch
Title: Photon Ultra DLP controller board
Size: A4
Date: 2024-04-12
Rev: 0.1.0
KiCad E.D.A. kicad 7.0.1
Id: 1/1