SPECIFICATIONS

Model：TL8733BUUA

WiFi4 BT5.2 USB2.0 12.2*12.9*2.3mm 20PIN

Version：V2.0

Pages：16 page

www.tro-link.com 0755-83224500 frankai@trolink.cn

Floor 5, Block E, Fenda High-Tech Park, Sanwei Community, Hangcheng Street, Bao'an District , Shenzhen

2nd Floor, Building B, Shijie, Block A, Huafeng First Science and Technology Park, Gushu, Bao'an District, Shenzhen

Shenzhen Trolink Technology Co,.Ltd.

Revision History

Version	Date	Contents of Revision Change	Draft	Checked	Approved
V1.0	2023/09/09	New version	LIU	Roger Zhang	
V2.0	2024/06/26	Unified version	LIU	Roger Zhang	

Catalogue

.

1.General Description 3
1.1 Introduction 3
1.2 Description 3
2.Product characteristics 3
3.Product picture 4
4.Block Diagram 4
5.Productpicture 5
5.1 2.4G WiFi Specifications 5
5.2 5GWiFi Specifications 5
5.3.Bluetooth Specifications 8
6.Pin definition 9
6.1 Pin outline 9
6.2 Pin Definition details 9
7.Electrical specification 10
8.Dimensional reference 10
8.1 Physical size 10
8.2 Physical Dimensions 11
8.3 Layout Recommendation 11
9.Reference design 12
9.1 Reference design 12
9.2 PCB design requirements 12
10.List of key materials 13
11.Reflow welding standard temperature 13
12.Packaging information 14
13.Selection information 14
14. Moisture sensitivity 15

1. General Description

1.1 Introduction

The TL8733BUUA module is designed with the latest RTL8733BU-CG chip of Realtek which is highly integrated. The module of IEEE802.11a/b/g/n standard supports 2.4GHz/5.8GHz and USB2.0 interfaces, which combines. WLAN, MAC, supporting 1T1R, WLAN base band, modem, and providing stable and high-speed through external antenna. Long-distance wireless connection, supporting 20MHz/40MHz bandwidth, providing the highest physical layer rate up to 150Mbps, Low power consumption and high throughput.

1.2 Description

Model name	TL8733BUUA
Product descriptor	IEEE802.11a/b/g/n
Dimension	12.2*12.9*2.3mm
Wi-Fi port	USB2.0
BT port	USB
Operating system support	Android/Linux/Win CE/iOS/WIN7/WIN10
Operating temperature	0℃ to+70℃
Storage temperature	-40℃ to+85℃

2. Product characteristics

- Standard:IEEE 802.11a/b/g/n
- Data rates up to 150Mbps with 20MHz/40MHz bandwidth
- Support 2.4GHz/5.8GHz Wi-Fi4
- Power supply3.3V±0.2V
- Bluetooth 5.2 Dual Mode support: Simultaneous LE and BR/EDR
- Supports Bluetooth 4.0 Low Energy(BLE)
- Compatible with Bluetooth v2.1+EDR and v5.2 Systems
- Supports USB2.0

3.Product picture

Front

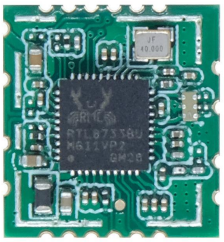

shield

Reverse

4.Block Diagram

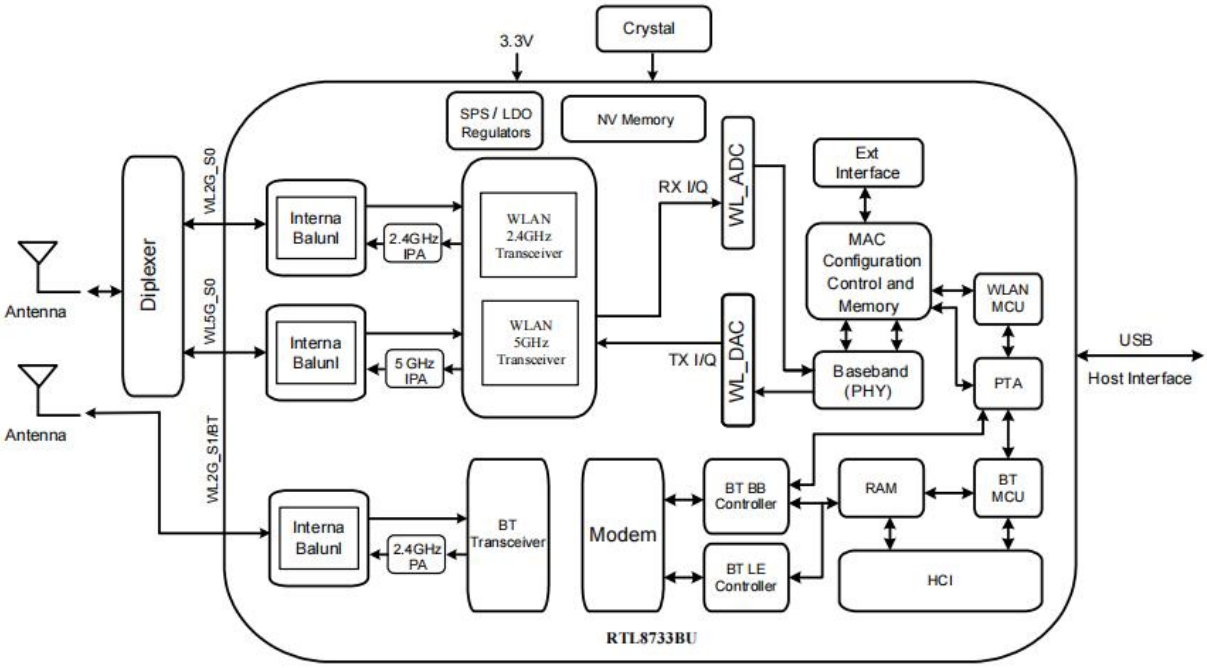

5.General specification

5.1 2.4G WiFi Specifications

TX power can control by driver side to increase or decrease the output value

Feature	**Description**	
WLAN Standard	IEEE 802.11b/g/n Wi-Fi compliant	
Frequency Range	2.400GHz ~ 2.497GHz (2.4GHz ISM Band)	
Number of Channels	2.4GHz：Ch1 ~ Ch14	
Test Items	**Typical Value**	**EVM**
Output Power[1]	802 . 11b /11Mbps : 19dBm ± 2 dB	EVM ≤ -10dB
	802 . 11g /54Mbps : 16dBm ± 2 dB	EVM ≤ -25dB
	802 . 11n /MCS7 : 15dBm ± 2 dB	EVM ≤ -28dB
Spectrum Mask	Meet with IEEE standard	
Freq. Tolerance	±20ppm	
SISO Receive Sensitivity (11b,20MHz) @8% PER	- 1Mbps PER @ -94dBm	≤ -83
	- 11Mbps PER @ -85dBm	≤ -76
SISO Receive Sensitivity (11g,20MHz) @10% PER	- 6Mbps PER @ -90dBm	≤ -85
	- 54Mbps PER @ -71dBm	≤ -68
SISO Receive Sensitivity (11n,20MHz) @10% PER	- MCS=0 PER @ -90dBm	≤ -85
	- MCS=7 PER @ -69dBm	≤ -67
SISO Receive Sensitivity (11n,40MHz) @10% PER	- MCS=0 PER @ -87dBm	≤ -82
	- MCS=7 PER @ -66dBm	≤ -64
Maximum Input Level	802.11b : - 10dBm	
	802.11g/n : - 20dBm	

5.2 5G WiFi Specifications

TX power can control by driver side to increase or decrease the output value;

Feature	**Description**	
WLAN Standard	IEEE 802.11a/n/Wi-Fi compliant	
Frequency Range	5.15GHz ~ 5.850GHz (5.0GHz ISM Band)	
Test Items	**Typical Value**	**EVM**
Output Power[1]	802.11a /54Mbps: 15dBm ± 2dB	EVM ≤ -25dB
	802.11n /MCS7: 15dBm ± 2dB	EVM ≤ -28dB
Spectrum Mask	Meet with IEEE standard	
Freq. Tolerance	±20ppm	
SISO Receive Sensitivity (11a,20MHz) @10% PER	- 6Mbps PER @ -90dBm	≤ -85
	- 54Mbps PER @ -71dBm	≤ -68
SISO Receive Sensitivity (11n,20MHz) @10% PER	- MCS=0 PER @ -90dBm	≤ -85
	- MCS=7 PER @ -69dBm	≤ -67
SISO Receive Sensitivity (11n,40MHz) @10% PER	- MCS=0 PER @ -87dBm	≤ -82
	- MCS=7 PER @ -66dBm	≤ -64

5.8G Frequency Reference

Band range	Operating Channel Numbers	Channel center frequencies(MHz)
5180MHz~5240MHz	36	5180
	40	5200
	44	5220
	48	5240
5260MHz~5320MHz	52	5260
	56	5280
	60	5300
	64	5320
5550MHz~5700MHz	100	5500
	104	5520
	108	5540
	112	5560
	116	5580
	120	5600
	124	5620
	128	5640
	132	5660
	136	5680
	140	5700
5745MHz~5825MHz	149	5745
	153	5765
	157	5785
	161	5805
	165	5825

5.3Bluetooth Specifications

Feature	Description		
General Specification			
Bluetooth Standard	Bluetooth V5.2		
Host Interface	USB		
Antenna Reference	Small antennas with 0~2dBi peak gain		
Frequency Band	2400 MHz ~ 2483.5 MHz		
Number of Channels	79 channels		
Modulation	GFSK, π/4-DQPSK, 8-DPSK		
RF Specification			
	Min(dBm)	Typical(dBm)	Max(dBm)
Output Power (Class 1)	0	5	10
Sensitivity@BER=0.1%for GFSK (1Mbps)		-92	
Sensitivity@BER=0.01%For π/4-DQPSK(2Mbps)		-86	
Sensitivity@BER=0.01%for 8DPSK (3Mbps)		-85	
Maximum Input Level	GFSK (1Mbps):-20dBm		
	π/4-DQPSK (2Mbps) :-20dBm		
	8DPSK (3Mbps) :-20dBm		

6.Pin definition

6.1 Pin outline

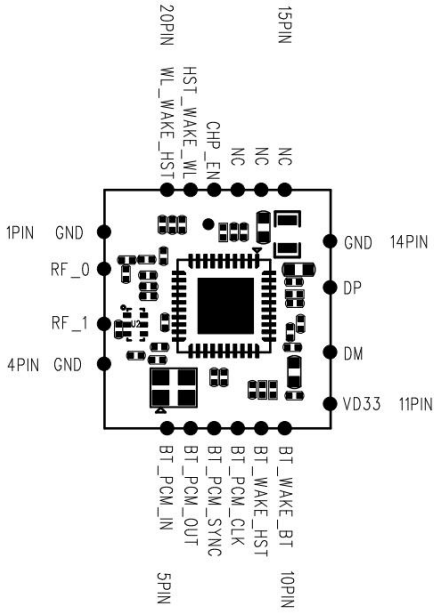

6.2 Pin Definition details

Pin number	Pin name	Function description
1	GND	Ground
2	RF0	BT RF TX/RX signal
3	RF1	WLAN RF TX/RX signal
4	GND	Ground
5	BT_PCM_IN	PCM input
6	BT_PCM_OUT	PCM output
7	BT_PCM_SYNC	PCM sync
8	BT_PCM_CLK	PCM clock
9	BT_WAKE_HOST	Bluetooth device wake up host
10	HOST_WAKE_BT	Host wake up Bluetooth device
11	VDD33	Main power voltage source input 3.3V
12	USB_DM	USB2.0 differential pair for WLAN And Bluetooth
13	USB_DP	USB2.0 differential pair for WLAN And Bluetooth
14	GND	Ground
15	NC	Not connecting
16	NC	Not connecting
17	NC	Not connecting
18	CHIP_EN	CHIP_EN
19	HOST_WAKE_WL	Host wake up WLAN device
20	WL_WAKE_HOST	WLAN device wake up host

7. Electrical specification

7.1 Dc characteristics of power supply

Describe	MIN	TYP	MAX	Unit
Operating Temperature	0	25	70	℃
VBAT	3	3.3	3.6	V
VDDIO	1.7	1.8/3.3	3.6	V

7.2 Power dissipation

	Mode	VCC33=3.3V（Unit：mA)
Power dissipation	TX HT20 11g Mode	240
	TX HT20 11b Mode	261
	TX HT20 11n Mode	216
	TX HT40 11n Mode	228
	RX Mode	164

8.Dimensional reference

8.1 Physical size

L x W : 12.2 x 12.9 (+0.1/-0.1) mm	**Reference design size**
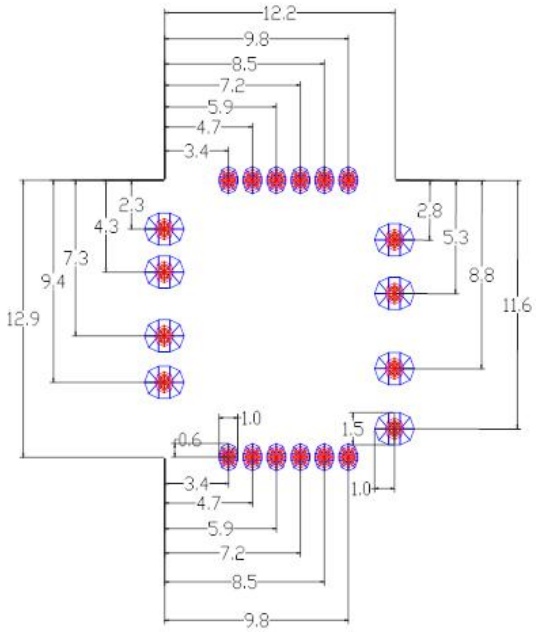	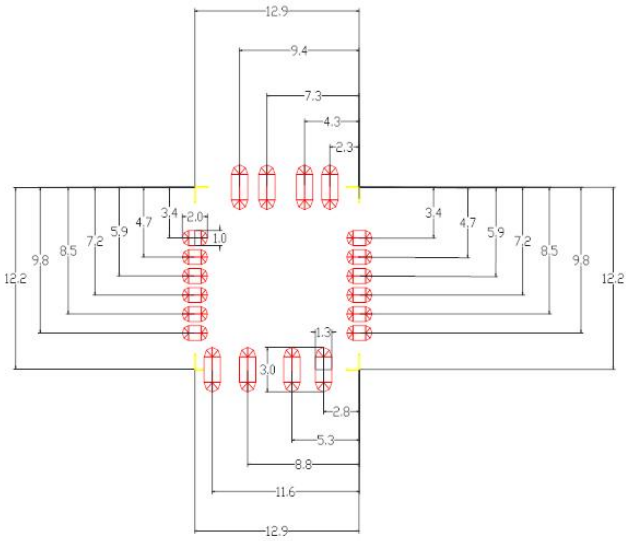
Height	**2.3 (±0.2) mm**
Weight	0. 59g

8.2 Physical Dimensions

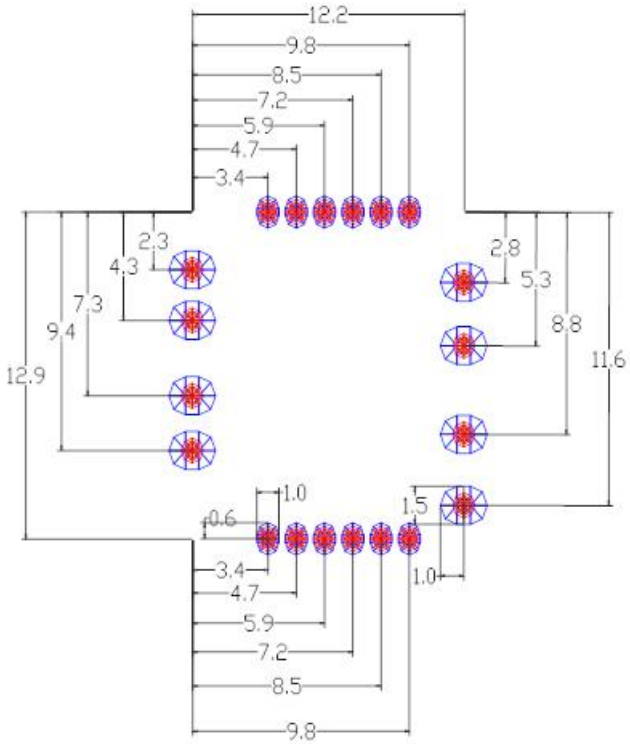

8.3 Layout Recommendation

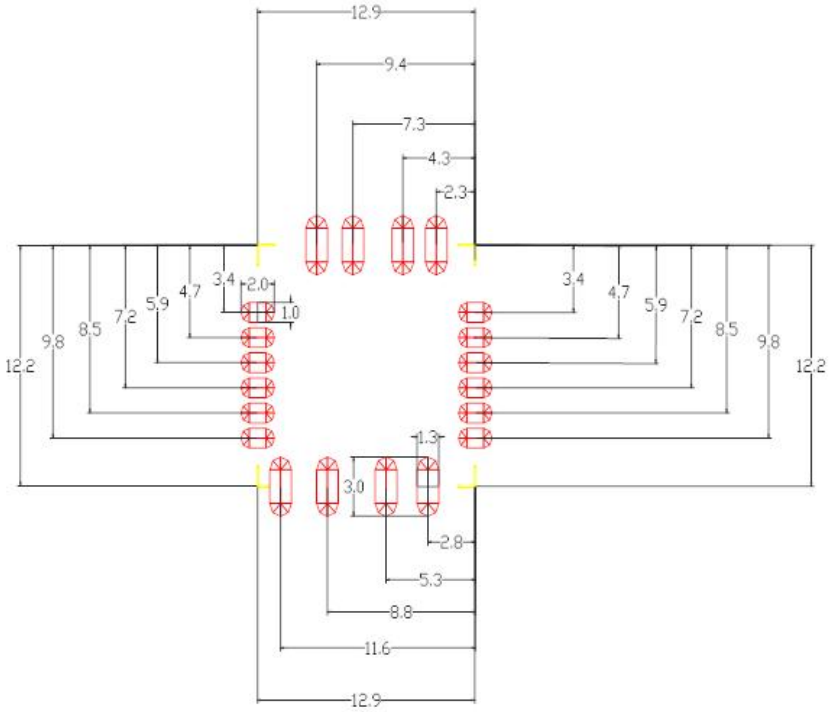

9.Reference design

9.1 Reference design

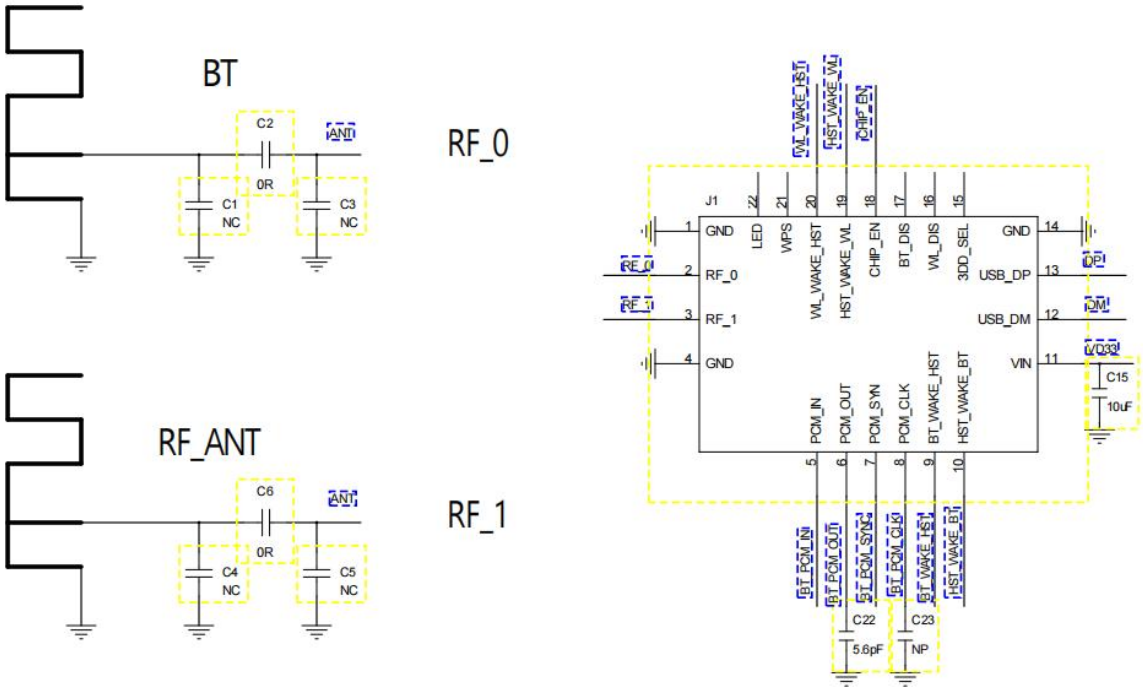

9.2 PCB design requirements

- RF The line should be covered with ground treatment and 50 ohm impedance
- USB Do differential isometric and 90 ohm impedance processing
- Power supply Suggestion 3.3V/1A

10.List of key materials

Part Name	Description	Manufacturer
Chip	RTL8733BU-CG	Realtek
PCB	TL8733BUUA-V1.0 12.2*12.9*0.8mm four-layer Green oil 20PIN	FZX/YX/LC
Crystal	40MHz 10PPM 12PF -20℃～85℃ 2016 SMD ROHS	JWT/JF
Duplexer	LD18D2450LAN-D41	JL

11.Reflow welding standard temperature

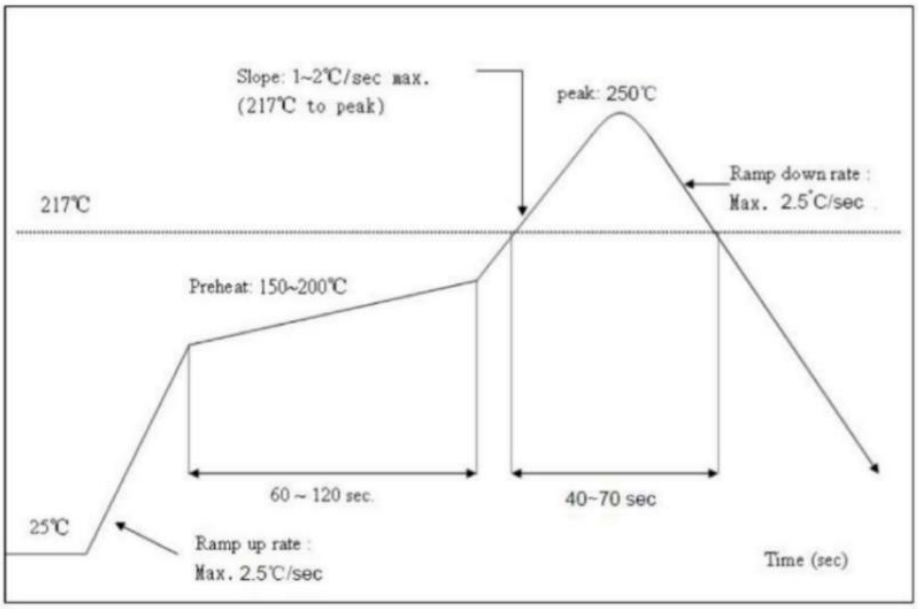

Heating zone:Temperature:<150℃, time:60~90seconds,slope control between 1 ~3℃/S.Preheating constant temperature zone: temperature: 150℃~200℃, time: 60-120 seconds, slope between 0.3-0.8.Reflow welding zone: Peak temperature 235 ° C ~ 250 ° C (recommended peak temperature < 245 ° C), time 30-70 seconds.Cooling zone: Temperature: 217℃~ 170℃, slope between 3 ~5℃/S. Solder is lead-free solder of tin silver copper alloy/ Sn&Ag& Cu Lead-free solder(SAC305)

12.Packaging information

- Use vacuum tape packing;
- Tape color: blue;
- Vacuum package built-in desiccant, 6 color humidity card;
- Other matters not covered shall be packaged according to customer's requirement;

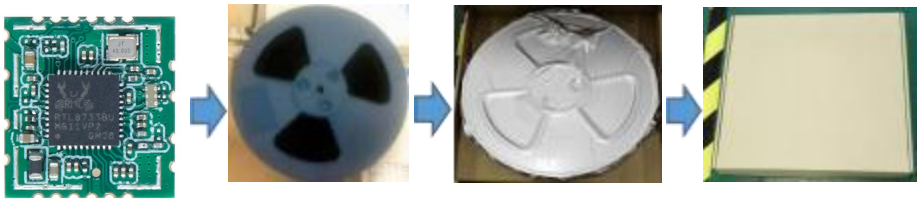

13.Selection information

TL8733BU UAX-Z

- Z:Shielding case（**Screen printing is optional**）
- X:Module version number
- A:Encapsulation:12.2*12.9mm
- U:USB
- Chip:RTL8733BU-CG
- TL:TROLINK

14. Moisture sensitivity

The Modules is a Moisture Sensitive Device level 3, in according with standard IPC/JEDECJ-STD-020, take care all the relatives requirements for using this kind of components.

Moreover, the customer has to take care of the following conditions:

a) Calculated shelf life in sealed bag: 12 months at <90% relative humidity(RH)

b) Environmental condition during the production: 30°C / 60% RH according to IPC/JEDECJ-STD-033Aparagraph 5

c) The maximum time between the opening of the sealed bag and the reflow process must be 168 Hoursifcondition b) “IPC/JEDEC J-STD-033A paragraph 5.2” is respected

d) Baking is required if conditions b) or c) are not respected

e) Baking is required if the humidity indicator inside the bag indicates 10% RH or more