Revision History

Version	Date	By	Change Dsecription
V1.0	2025-12-09	ALIENTEK	1:Initial release version

Title: 01_ATK-DLRK3562JB_ReviSion_History.SchDoc		
Project: ATK-DLRK3562JB_V1.0.PrjPcb		
Size: A4	Author: ALIENTEK	
Date: 2026/1/7	Version: V1.0	Sheet: 1 of 11

正点原子

BTB PIN

电源输入输出：

（1）VCC5V0_SYS：5V电源，输入给核心板；
（2）VCC3V3_SYS：3.3V电源，输入给核心板；
（3）VCC3V3_SD ：SD卡（TF卡）供电电源，由核心板输出；
（4）VCCIO_SD ：SD卡（TF卡）信号电源，由核心板输出；
（5）VCC_3V3 ：3.3V通用电源，由核心板输出；
（6）VCC_1V8 ：1.8V通用电源，由核心板输出。

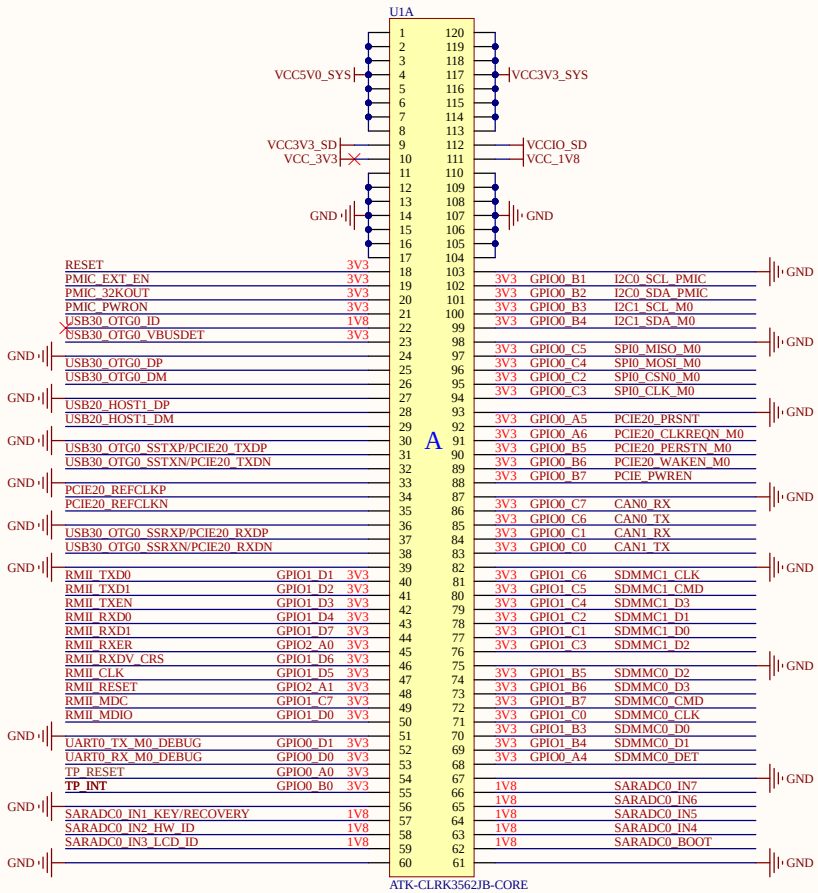

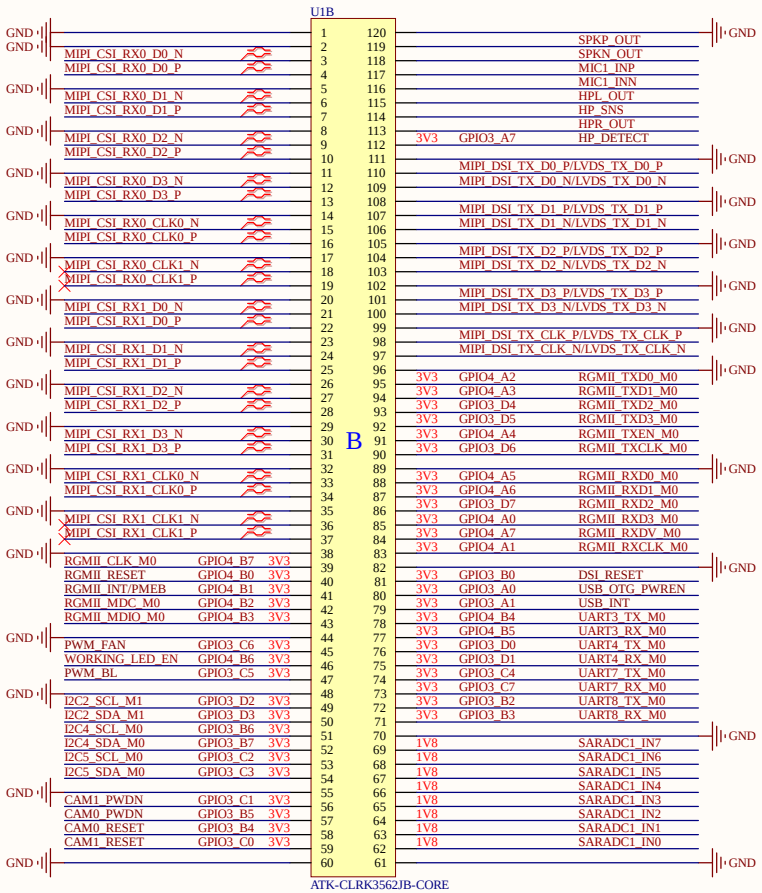

液晶模块固定螺母

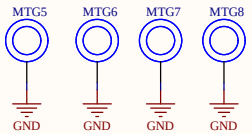

开发板支撑螺母

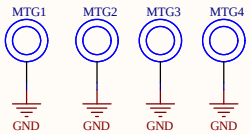

亚克力固定铜柱

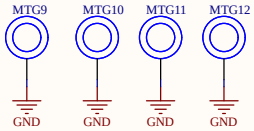

说明：
× 该符号表示开发板未使用到该BTB连接座引脚，仅作预留处理

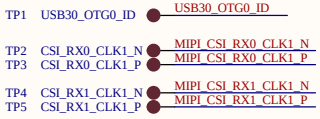

MARK点

Title: 02_ATK-DLRK3562JB_CORE_BOARD.SchDoc		
Project: ATK-DLRK3562JB_V1.0.PrjPcb		
Size: A3	Author: ALIENTEK	
Date: 2026/1/7	Version: V1.0	Sheet: 2 of 11

正点原子

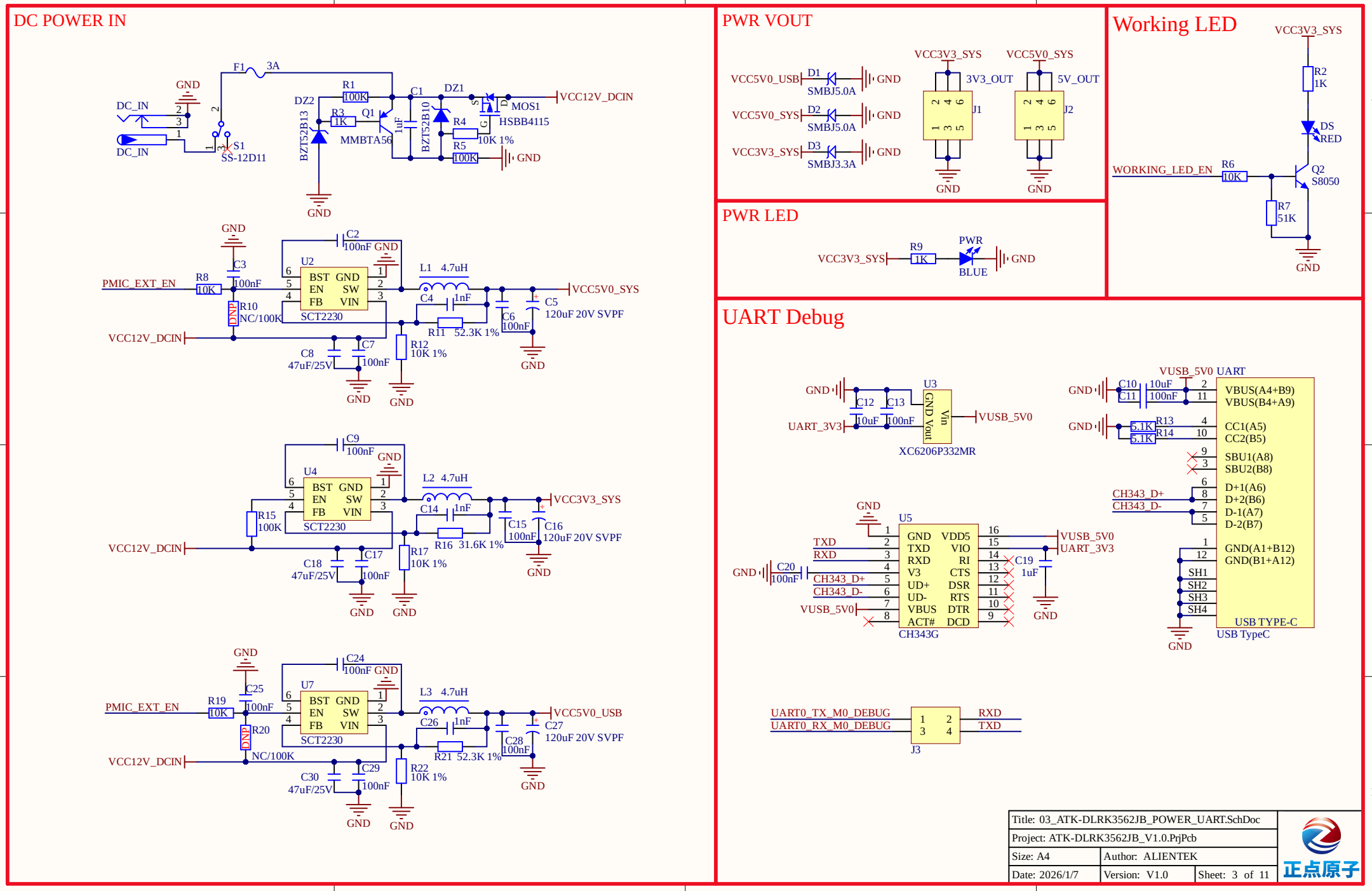
DC POWER IN
F1 3A
GND
DC_IN
DC_IN
S1
SS-12D11
DZ2
BZT52B13
R1 100K
R3 1K
Q1
MMBTA56
C1 1uF
DZ1
BZT52B10
R4 10K 1%
R5 100K
MOS1
HSBB4115
VCC12V_DCIN
U2
BST GND
EN SW
FB VIN
SCT2230
C2 100nF
C3 100nF
R8 10K
PMIC_EXT_EN
R10 NC/100K
DNP
L1 4.7uH
C4 1nF
R11 52.3K 1%
C6 100nF
C5 120uF 20V SVPF
VCC5V0_SYS
C7 100nF
C8 47uF/25V
R12 10K 1%
U4
C9 100nF
R15 100K
L2 4.7uH
C14 1nF
R16 31.6K 1%
C15 100nF
C16 120uF 20V SVPF
VCC3V3_SYS
C17 100nF
C18 47uF/25V
R17 10K 1%
U7
C24 100nF
R19 10K
C25 100nF
R20 NC/100K
L3 4.7uH
C26 1nF
R21 52.3K 1%
C28 100nF
C27 120uF 20V SVPF
VCC5V0_USB
C29 100nF
C30 47uF/25V
R22 10K 1%
PWR VOUT
VCC5V0_USB
D1 SMBJ5.0A
VCC5V0_SYS
D2 SMBJ5.0A
VCC3V3_SYS
D3 SMBJ3.3A
3V3_OUT
5V_OUT
J1
J2
PWR LED
R9 1K
PWR
BLUE
Working LED
VCC3V3_SYS
R2 1K
DS RED
WORKING_LED_EN
R6 10K
Q2 S8050
R7 51K
UART Debug
U3
XC6206P332MR
GND Vout Vin
UART_3V3
VUSB_5V0
C10 10uF
C11 100nF
C12 10uF
C13 100nF
R13 5.1K
R14 5.1K
VUSB_5V0 UART
VBUS(A4+B9)
VBUS(B4+A9)
CC1(A5)
CC2(B5)
SBU1(A8)
SBU2(B8)
D+1(A6)
D+2(B6)
D-1(A7)
D-2(B7)
CH343_D+
CH343_D-
GND(A1+B12)
GND(B1+A12)
SH1
SH2
SH3
SH4
USB TYPE-C
USB TypeC
U5
CH343G
GND VDD5
TXD VIO
RXD RI
V3 CTS
UD+ DSR
UD- RTS
VBUS DTR
ACT# DCD
C20 100nF
C19 1uF
UART0_TX_M0_DEBUG
UART0_RX_M0_DEBUG
J3
RXD
TXD
Title: 03_ATK-DLRK3562JB_POWER_UART.SchDoc
Project: ATK-DLRK3562JB_V1.0.PrjPcb
Size: A4
Author: ALIENTEK
Date: 2026/1/7
Version: V1.0
Sheet: 3 of 11
正点原子

Reset Key

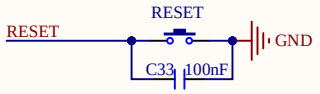

PowerOn Key

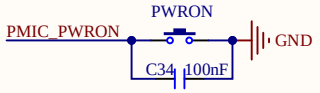

Function Keys

该引脚已在核心板上拉10K（1%）电阻至1.8V（VCC_1V8）

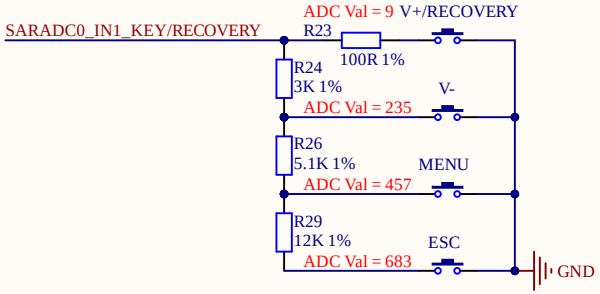

FAN

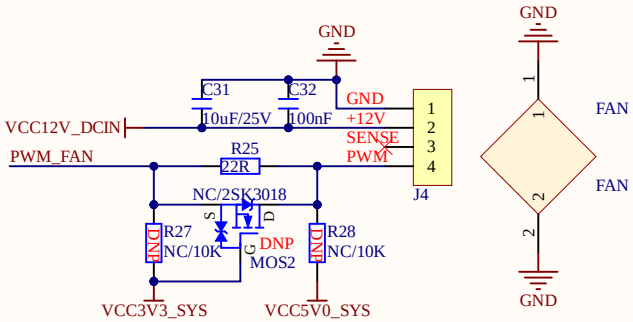

Maskrom/Update Key

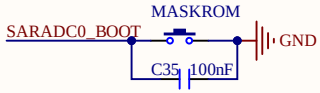

ADC

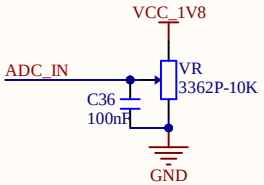

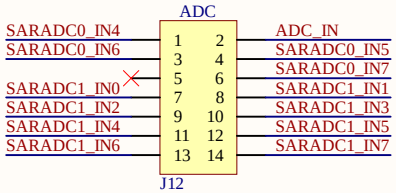

BOOT Config

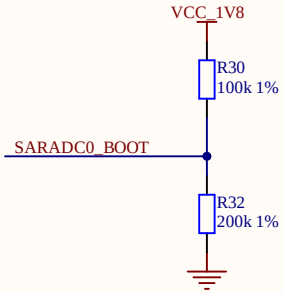

BOOT_Config Maskrom/Update Key Value

Config Table for SARADC0_BOOT

Item	Rup	Rdown	ADC Value	Boot Mode
Config1	DNP	100K	0	USB (Maskrom mode)
Config2	100K	12K	114	
Config3	100K	27K	228	FSPI--USB
Config4	100K	51K	342	
Config5	100K	82K	456	
Config6	100K	120K	570	EMMC--USB
Config7	100K	200K	683	EMMC--SD Card--USB
Config8	100K	330K	796	SD Card--USB
Config9	100K	820K	910	
Config10	100K	DNP	1023	FSPI--EMMC--SD Card--USB

HW_ID Config

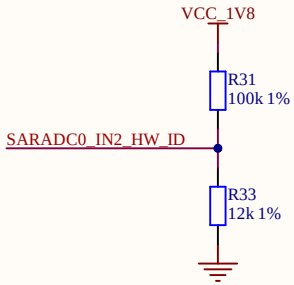

Config Table for SARADC0_IN2_HW_ID

Item	Rup	Rdown	ADC Value
EVB1	100K	12K	114
EVB2	100K	27K	228
Reserved	100K	51K	342
IOTEST	100K	82K	456
TEST1	100K	120K	570
TEST2	100K	200K	683
Reserved	100K	330K	796
Reserved	100K	820K	910
Reserved	100K	DNP	1023

Title: 04_ATK-DLRK3562JB_DEVICE1.SchDoc		
Project: ATK-DLRK3562JB_V1.0.PrjPcb		
Size: A4	Author: ALIENTEK	
Date: 2026/1/7	Version: V1.0	Sheet: 4 of 11

正点原子

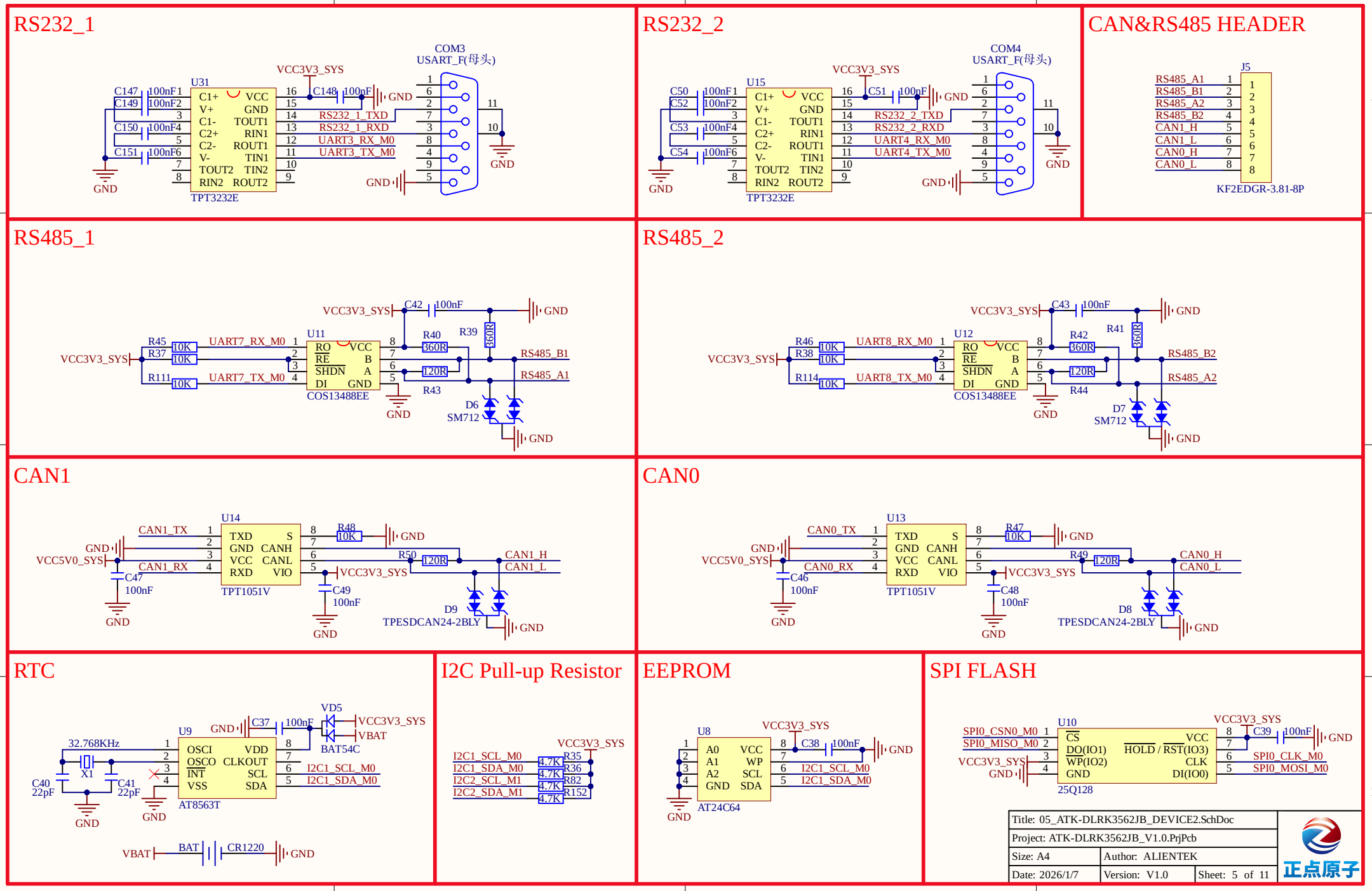
RS232_1
U31
TPT3232E
COM3
USART_F(母头)
VCC3V3_SYS
C147 100nF1
C149 100nF2
C150 100nF4
C151 100nF6
C148 100nF
RS232_1_TXD
RS232_1_RXD
UART3_RX_M0
UART3_TX_M0
GND
RS232_2
U15
TPT3232E
COM4
USART_F(母头)
C50 100nF1
C52 100nF2
C53 100nF4
C54 100nF6
C51 100nF
RS232_2_TXD
RS232_2_RXD
UART4_RX_M0
UART4_TX_M0
CAN&RS485 HEADER
J5
RS485_A1
RS485_B1
RS485_A2
RS485_B2
CAN1_H
CAN1_L
CAN0_H
CAN0_L
KF2EDGR-3.81-8P
RS485_1
U11
COS13488EE
VCC3V3_SYS
C42 100nF
R45 10K
R37 10K
R111 10K
UART7_RX_M0
UART7_TX_M0
R40 360R
R39 360R
R43 120R
RS485_B1
RS485_A1
D6
SM712
RS485_2
U12
COS13488EE
C43 100nF
R46 10K
R38 10K
R114 10K
UART8_RX_M0
UART8_TX_M0
R42 360R
R41 360R
R44 120R
RS485_B2
RS485_A2
D7
SM712
CAN1
U14
TPT1051V
CAN1_TX
CAN1_RX
VCC5V0_SYS
C47 100nF
R48 10K
R50 120R
C49 100nF
CAN1_H
CAN1_L
D9
TPESDCAN24-2BLY
CAN0
U13
TPT1051V
CAN0_TX
CAN0_RX
C46 100nF
R47 10K
R49 120R
C48 100nF
CAN0_H
CAN0_L
D8
TPESDCAN24-2BLY
RTC
U9
AT8563T
32.768KHz
X1
C40 22pF
C41 22pF
C37 100nF
VD5
BAT54C
VCC3V3_SYS
VBAT
I2C1_SCL_M0
I2C1_SDA_M0
BAT
CR1220
I2C Pull-up Resistor
I2C1_SCL_M0
I2C1_SDA_M0
I2C2_SCL_M1
I2C2_SDA_M1
R35 4.7K
R36 4.7K
R82 4.7K
R152 4.7K
EEPROM
U8
AT24C64
C38 100nF
SPI FLASH
U10
25Q128
SPI0_CSN0_M0
SPI0_MISO_M0
C39 100nF
SPI0_CLK_M0
SPI0_MOSI_M0
Title: 05_ATK-DLRK3562JB_DEVICE2.SchDoc
Project: ATK-DLRK3562JB_V1.0.PrjPcb
Size: A4
Author: ALIENTEK
Date: 2026/1/7
Version: V1.0
Sheet: 5 of 11
正点原子

USB HUB

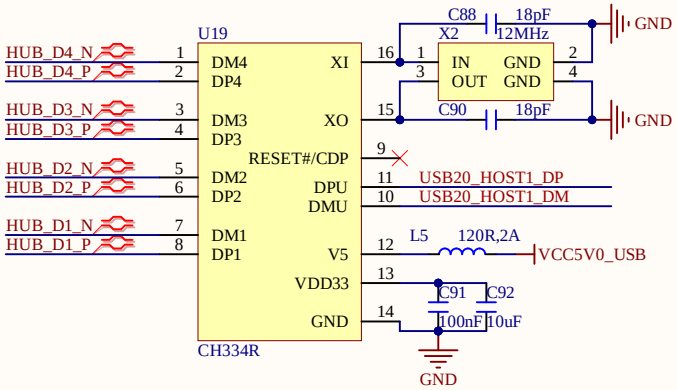

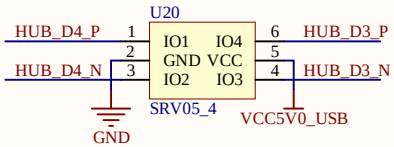

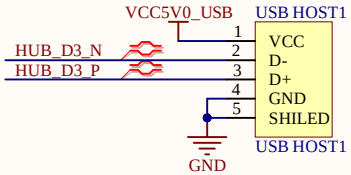

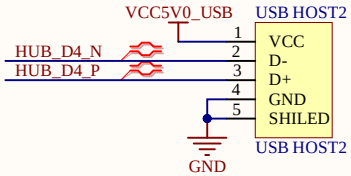

4G MODULE

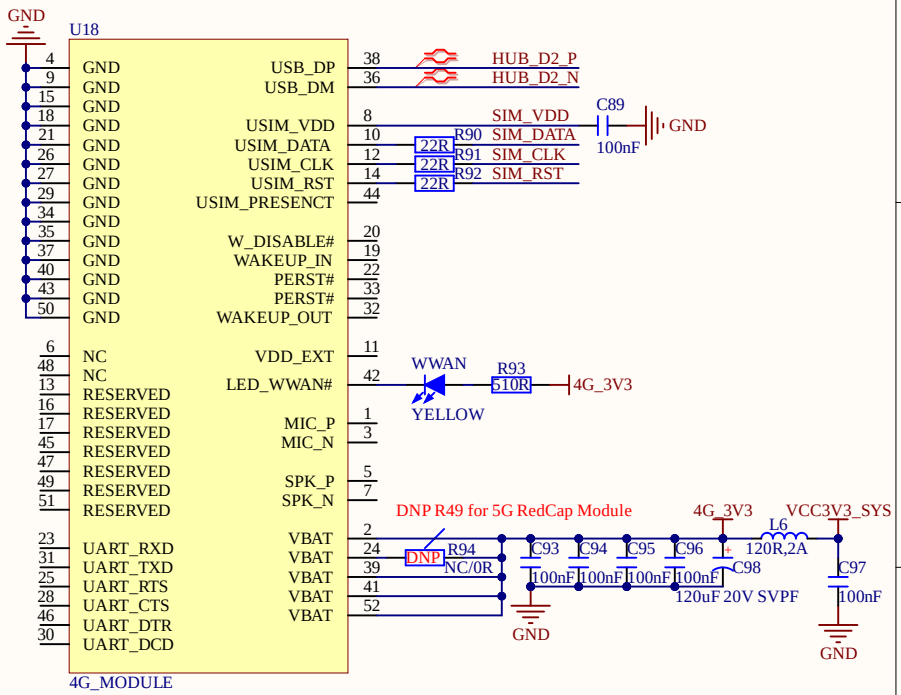

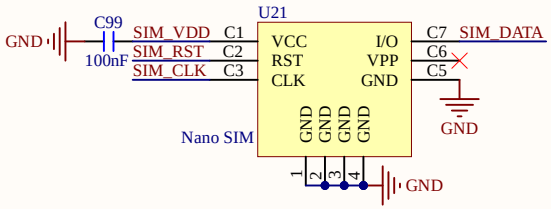

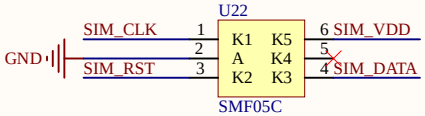

Title: 06_ATK-DLRK3562JB_4G_HUB.SchDoc		
Project: ATK-DLRK3562JB_V1.0.PrjPcb		
Size: A4	Author: ALIENTEK	
Date: 2026/1/7	Version: V1.0	Sheet: 6 of 11

正点原子

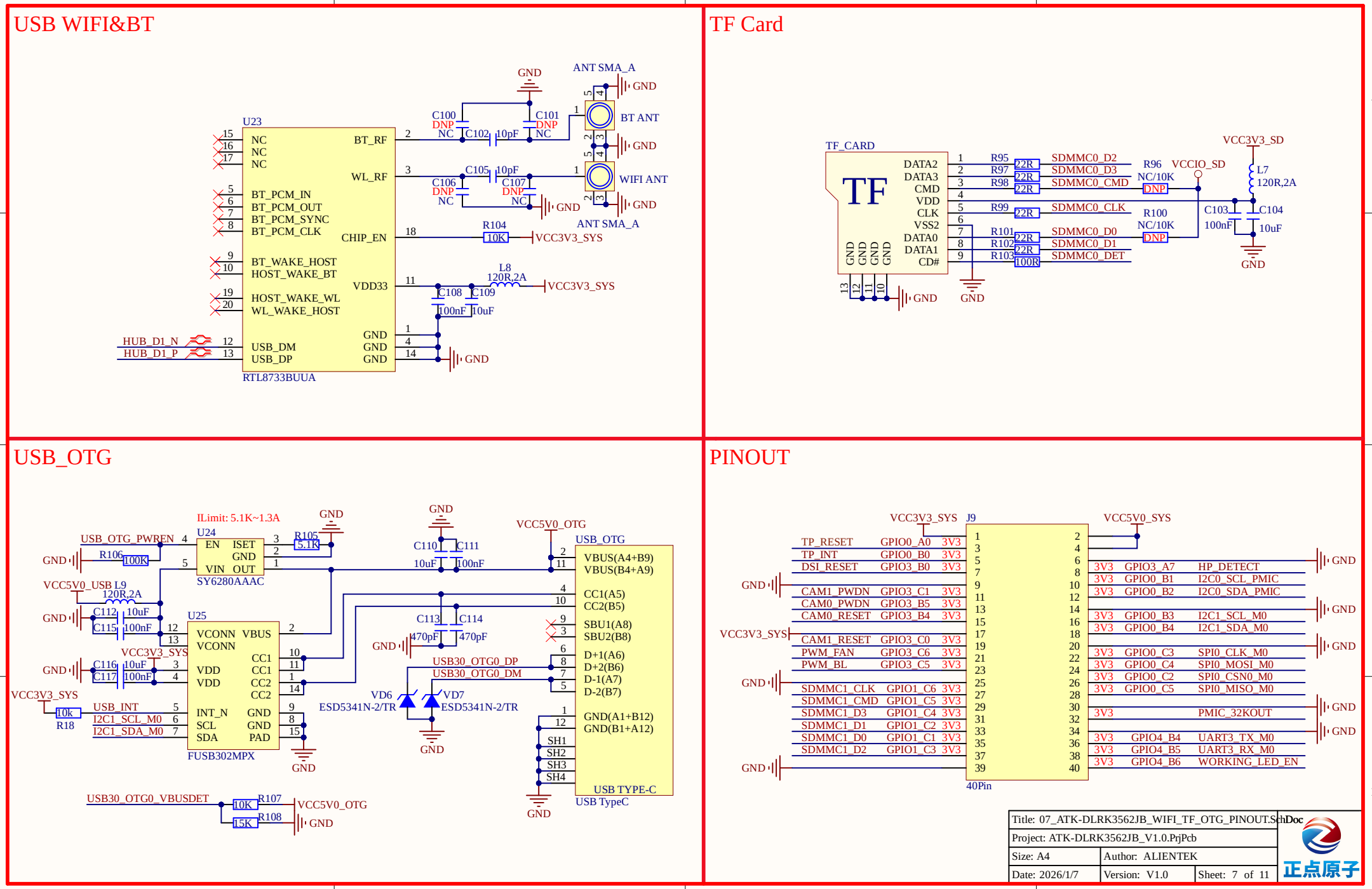
USB WIFI&BT
U23
RTL8733BUUA
NC
BT_RF
WL_RF
BT_PCM_IN
BT_PCM_OUT
BT_PCM_SYNC
BT_PCM_CLK
CHIP_EN
BT_WAKE_HOST
HOST_WAKE_BT
VDD33
HOST_WAKE_WL
WL_WAKE_HOST
USB_DM
USB_DP
HUB_D1_N
HUB_D1_P
GND
ANT SMA_A
BT ANT
WIFI ANT
C100 DNP NC
C101 DNP NC
C102 10pF
C105 10pF
C106 DNP NC
C107 DNP NC
R104 10K
VCC3V3_SYS
L8 120R,2A
C108 100nF
C109 10uF
TF Card
TF_CARD
TF
DATA2
DATA3
CMD
VDD
CLK
VSS2
DATA0
DATA1
CD#
R95 22R
R97 22R
R98 22R
R99 22R
R101 22R
R102 22R
R103 100R
SDMMC0_D2
SDMMC0_D3
SDMMC0_CMD
SDMMC0_CLK
SDMMC0_D0
SDMMC0_D1
SDMMC0_DET
R96 NC/10K DNP
R100 NC/10K DNP
VCCIO_SD
VCC3V3_SD
L7 120R,2A
C103 100nF
C104 10uF
USB_OTG
ILimit: 5.1K~1.3A
U24
SY6280AAAC
EN
ISET
GND
VIN
OUT
R105 5.1K
USB_OTG_PWREN
R106 100K
VCC5V0_USB
L9 120R,2A
C112 10uF
C115 100nF
U25
FUSB302MPX
VCONN
VBUS
CC1
CC2
VDD
INT_N
SCL
SDA
PAD
VCC3V3_SYS
C116 10uF
C117 100nF
R18 10k
USB_INT
I2C1_SCL_M0
I2C1_SDA_M0
C110 10uF
C111 100nF
C113 470pF
C114 470pF
VCC5V0_OTG
USB_OTG
VBUS(A4+B9)
VBUS(B4+A9)
CC1(A5)
CC2(B5)
SBU1(A8)
SBU2(B8)
D+1(A6)
D+2(B6)
D-1(A7)
D-2(B7)
GND(A1+B12)
GND(B1+A12)
SH1
SH2
SH3
SH4
USB TYPE-C
USB TypeC
USB30_OTG0_DP
USB30_OTG0_DM
VD6 ESD5341N-2/TR
VD7 ESD5341N-2/TR
USB30_OTG0_VBUSDET
R107 10K
R108 15K
PINOUT
J9
40Pin
VCC3V3_SYS
VCC5V0_SYS
TP_RESET GPIO0_A0 3V3
TP_INT GPIO0_B0 3V3
DSI_RESET GPIO3_B0 3V3
CAM1_PWDN GPIO3_C1 3V3
CAM0_PWDN GPIO3_B5 3V3
CAM0_RESET GPIO3_B4 3V3
CAM1_RESET GPIO3_C0 3V3
PWM_FAN GPIO3_C6 3V3
PWM_BL GPIO3_C5 3V3
SDMMC1_CLK GPIO1_C6 3V3
SDMMC1_CMD GPIO1_C5 3V3
SDMMC1_D3 GPIO1_C4 3V3
SDMMC1_D1 GPIO1_C2 3V3
SDMMC1_D0 GPIO1_C1 3V3
SDMMC1_D2 GPIO1_C3 3V3
3V3 GPIO3_A7 HP_DETECT
3V3 GPIO0_B1 I2C0_SCL_PMIC
3V3 GPIO0_B2 I2C0_SDA_PMIC
3V3 GPIO0_B3 I2C1_SCL_M0
3V3 GPIO0_B4 I2C1_SDA_M0
3V3 GPIO0_C3 SPI0_CLK_M0
3V3 GPIO0_C4 SPI0_MOSI_M0
3V3 GPIO0_C2 SPI0_CSN0_M0
3V3 GPIO0_C5 SPI0_MISO_M0
3V3 PMIC_32KOUT
3V3 GPIO4_B4 UART3_TX_M0
3V3 GPIO4_B5 UART3_RX_M0
3V3 GPIO4_B6 WORKING_LED_EN
Title: 07_ATK-DLRK3562JB_WIFI_TF_OTG_PINOUT.SchDoc
Project: ATK-DLRK3562JB_V1.0.PrjPcb
Size: A4
Author: ALIENTEK
Date: 2026/1/7
Version: V1.0
Sheet: 7 of 11
正点原子

PCIE2.0 x1 Slot

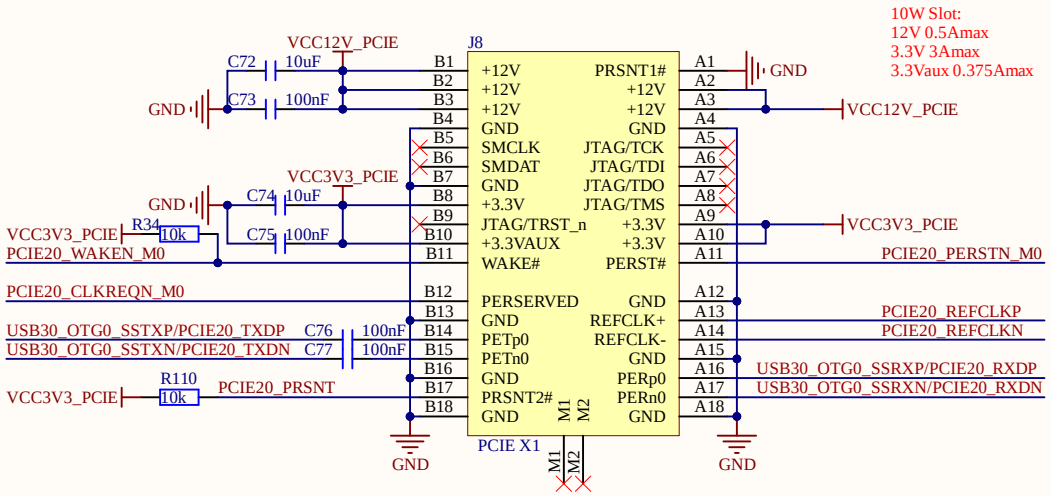

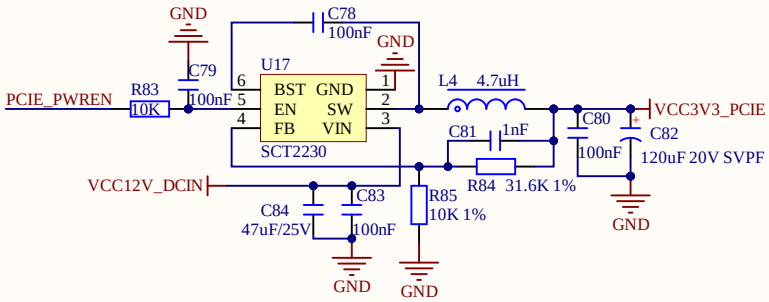

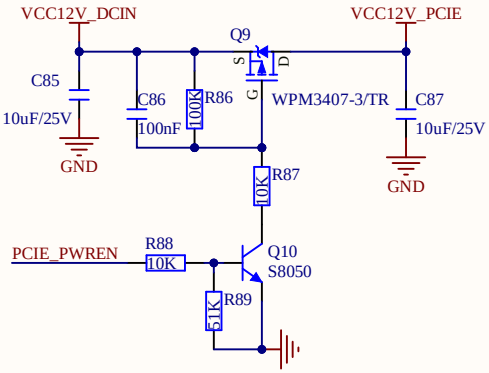

AUDIO

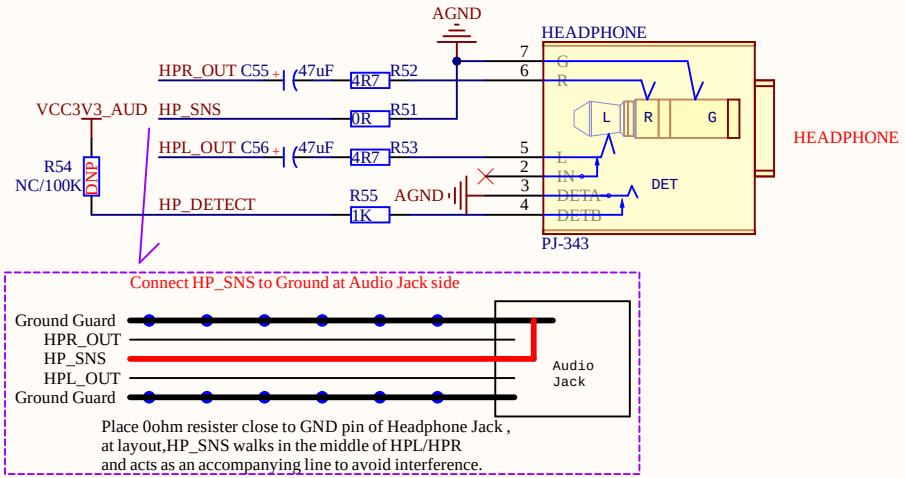

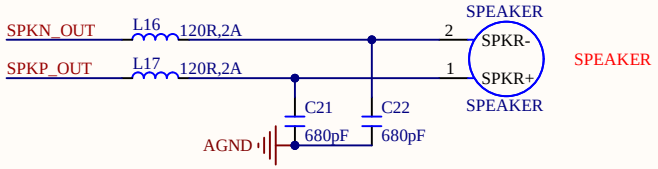

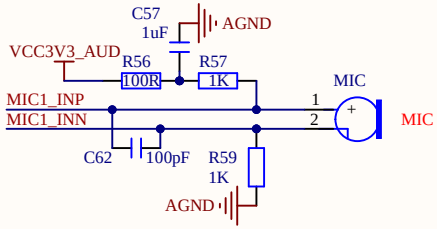

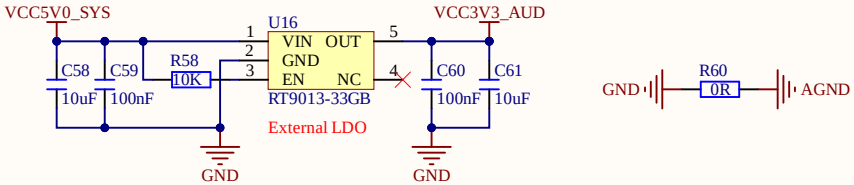

Title: 08_ATK-DLRK3562JB_PCIE_AUDIO.SchDoc		
Project: ATK-DLRK3562JB_V1.0.PrjPcb		
Size: A4	Author: ALIENTEK	
Date: 2026/1/7	Version: V1.0	Sheet: 8 of 11

正点原子

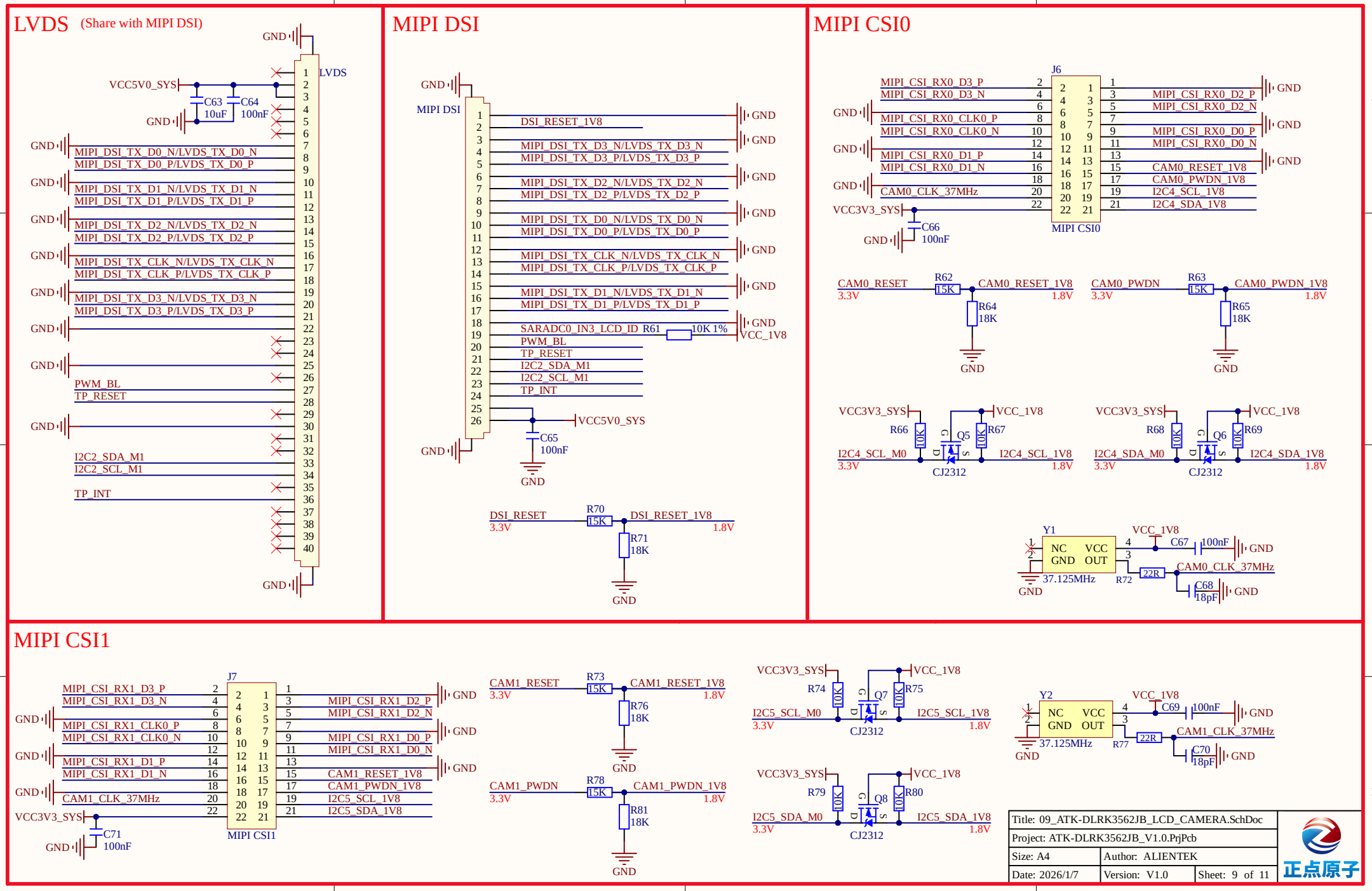
LVDS (Share with MIPI DSI)
LVDS
VCC5V0_SYS
C63 10uF
C64 100nF
MIPI_DSI_TX_D0_N/LVDS_TX_D0_N
MIPI_DSI_TX_D0_P/LVDS_TX_D0_P
MIPI_DSI_TX_D1_N/LVDS_TX_D1_N
MIPI_DSI_TX_D1_P/LVDS_TX_D1_P
MIPI_DSI_TX_D2_N/LVDS_TX_D2_N
MIPI_DSI_TX_D2_P/LVDS_TX_D2_P
MIPI_DSI_TX_CLK_N/LVDS_TX_CLK_N
MIPI_DSI_TX_CLK_P/LVDS_TX_CLK_P
MIPI_DSI_TX_D3_N/LVDS_TX_D3_N
MIPI_DSI_TX_D3_P/LVDS_TX_D3_P
PWM_BL
TP_RESET
I2C2_SDA_M1
I2C2_SCL_M1
TP_INT
MIPI DSI
DSI_RESET_1V8
SARADC0_IN3_LCD_ID R61 10K 1%
VCC_1V8
VCC5V0_SYS
C65 100nF
DSI_RESET 3.3V
R70 15K
DSI_RESET_1V8 1.8V
R71 18K
MIPI CSI0
J6
MIPI_CSI_RX0_D3_P
MIPI_CSI_RX0_D3_N
MIPI_CSI_RX0_CLK0_P
MIPI_CSI_RX0_CLK0_N
MIPI_CSI_RX0_D1_P
MIPI_CSI_RX0_D1_N
CAM0_CLK_37MHz
MIPI_CSI_RX0_D2_P
MIPI_CSI_RX0_D2_N
MIPI_CSI_RX0_D0_P
MIPI_CSI_RX0_D0_N
CAM0_RESET_1V8
CAM0_PWDN_1V8
I2C4_SCL_1V8
I2C4_SDA_1V8
VCC3V3_SYS
C66 100nF
CAM0_RESET 3.3V
R62 15K
CAM0_RESET_1V8 1.8V
R64 18K
CAM0_PWDN 3.3V
R63 15K
CAM0_PWDN_1V8 1.8V
R65 18K
R66 10K
Q5 CJ2312
R67 10K
I2C4_SCL_M0 3.3V
I2C4_SCL_1V8 1.8V
R68 10K
Q6 CJ2312
R69 10K
I2C4_SDA_M0 3.3V
I2C4_SDA_1V8 1.8V
Y1 37.125MHz
NC GND VCC OUT
C67 100nF
R72 22R
CAM0_CLK_37MHz
C68 18pF
MIPI CSI1
J7
MIPI_CSI_RX1_D3_P
MIPI_CSI_RX1_D3_N
MIPI_CSI_RX1_CLK0_P
MIPI_CSI_RX1_CLK0_N
MIPI_CSI_RX1_D1_P
MIPI_CSI_RX1_D1_N
CAM1_CLK_37MHz
MIPI_CSI_RX1_D2_P
MIPI_CSI_RX1_D2_N
MIPI_CSI_RX1_D0_P
MIPI_CSI_RX1_D0_N
CAM1_RESET_1V8
CAM1_PWDN_1V8
I2C5_SCL_1V8
I2C5_SDA_1V8
VCC3V3_SYS
C71 100nF
CAM1_RESET 3.3V
R73 15K
CAM1_RESET_1V8 1.8V
R76 18K
CAM1_PWDN 3.3V
R78 15K
CAM1_PWDN_1V8 1.8V
R81 18K
R74 10K
Q7 CJ2312
R75 10K
I2C5_SCL_M0 3.3V
I2C5_SCL_1V8 1.8V
R79 10K
Q8 CJ2312
R80 10K
I2C5_SDA_M0 3.3V
I2C5_SDA_1V8 1.8V
Y2 37.125MHz
NC GND VCC OUT
C69 100nF
R77 22R
CAM1_CLK_37MHz
C70 18pF
Title: 09_ATK-DLRK3562JB_LCD_CAMERA.SchDoc
Project: ATK-DLRK3562JB_V1.0.PrjPcb
Size: A4
Author: ALIENTEK
Date: 2026/1/7
Version: V1.0
Sheet: 9 of 11
正点原子

PHY RMII

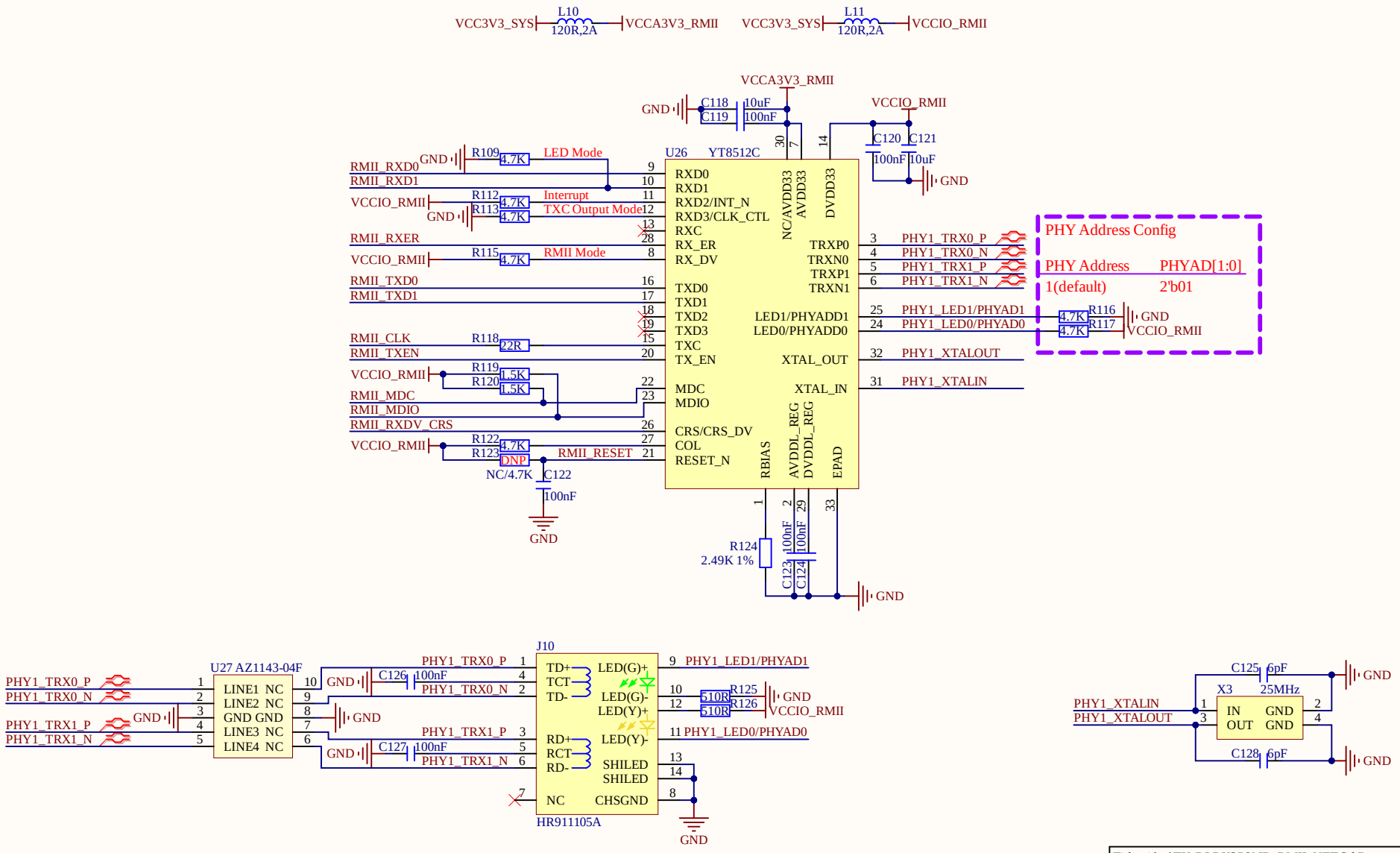

Title: 10_ATK-DLRK3562JB_RMII_NET.SchDoc		
Project: ATK-DLRK3562JB_V1.0.PrjPcb		
Size: A4	Author: ALIENTEK	
Date: 2026/1/7	Version: V1.0	Sheet: 10 of 11

正点原子

PHY RGMII

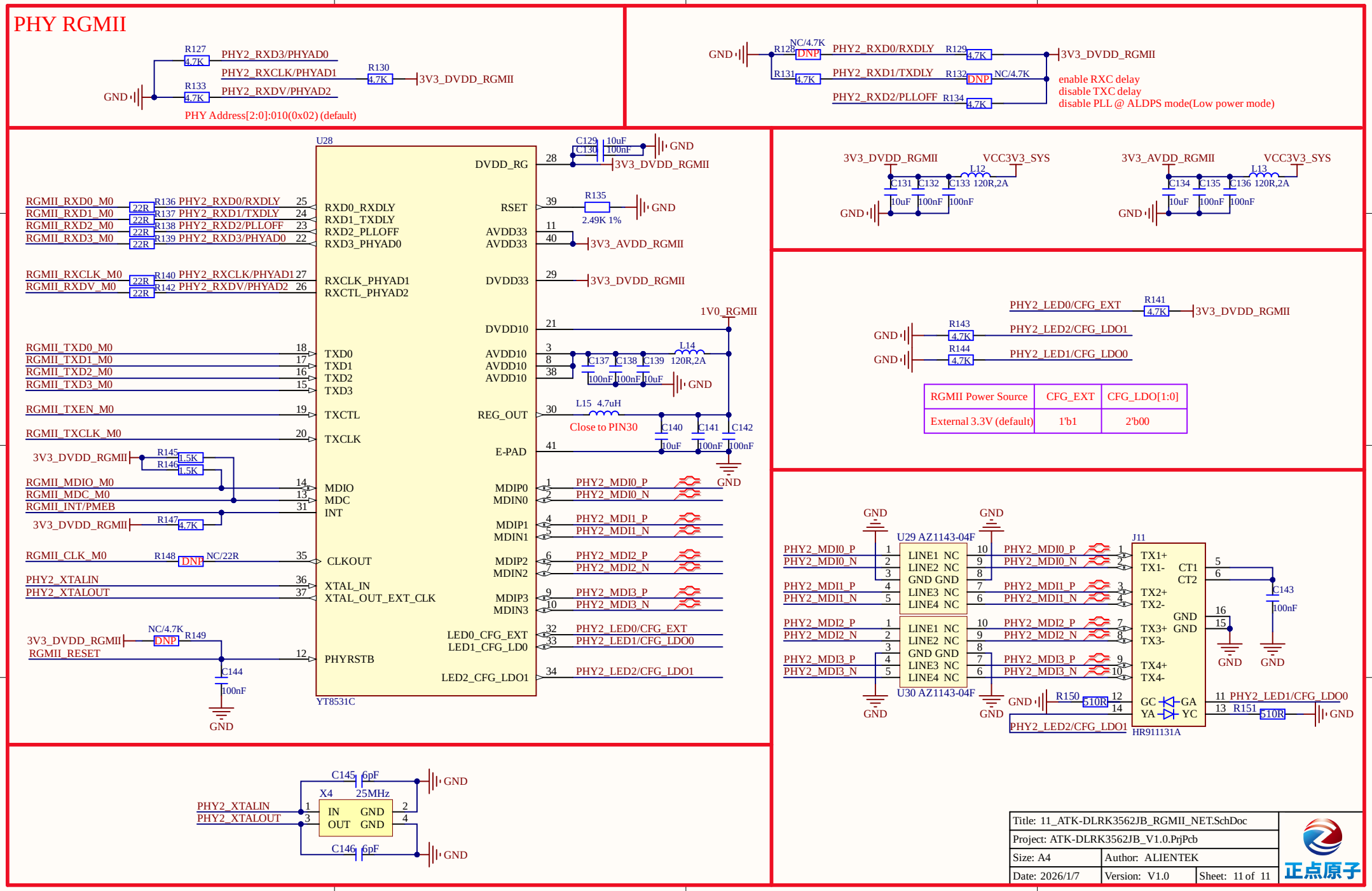

Title: 11_ATK-DLRK3562JB_RGMII_NET.SchDoc	
Project: ATK-DLRK3562JB_V1.0.PrjPcb	
Size: A4	Author: ALIENTEK
Date: 2026/1/7	Version: V1.0 Sheet: 11 of 11

正点原子