Revision History

Version	Date	By	Change Dsecription
V1.5	2023-6-30	zuozhongkai	1:Initial release version

Title: 01_ReviSion History.SchDoc		
Project: ATK_DLRK3568_V1.5.PrjPcb		
Size: A4	Author: ALIENTEK	
Date: 2023/7/6	Version: V1.7	Sheet: 1 of 14

正点原子

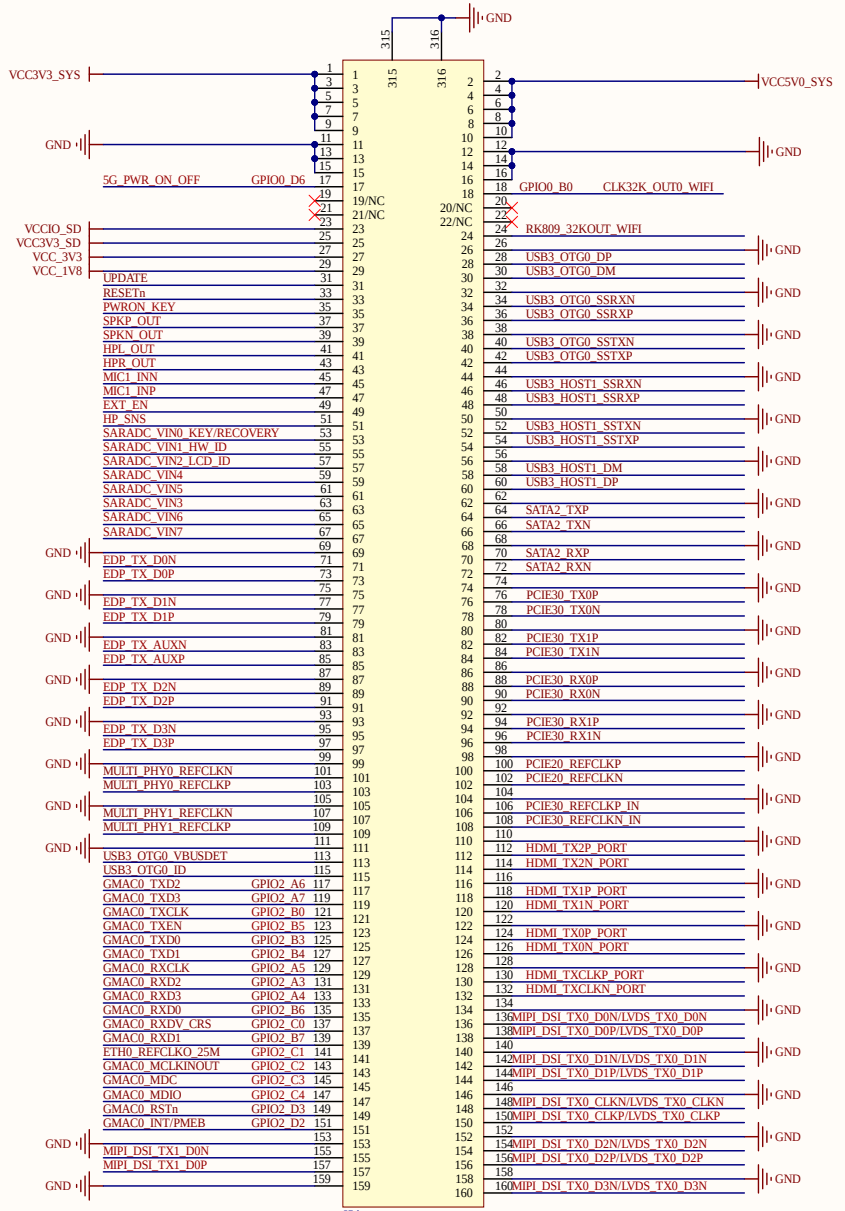

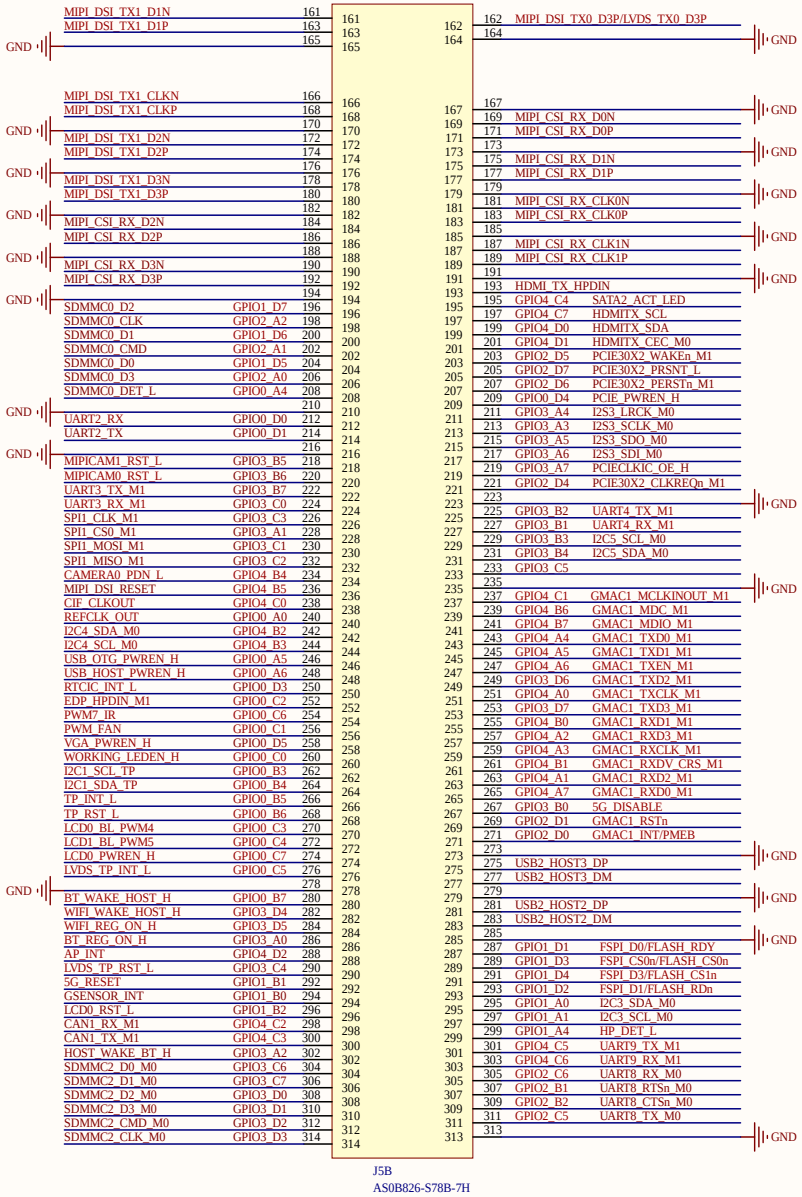

Title: ATK_RK3568_Core_Board.SchDoc		
Project: ATK_DLRK3568_V1.5.PrjPcb		
Size: A3	Author: ALIENTEK	
Date: 2023/7/6	Version: V1.5	Sheet: 2 of 14

正点原子

DC POWER IN

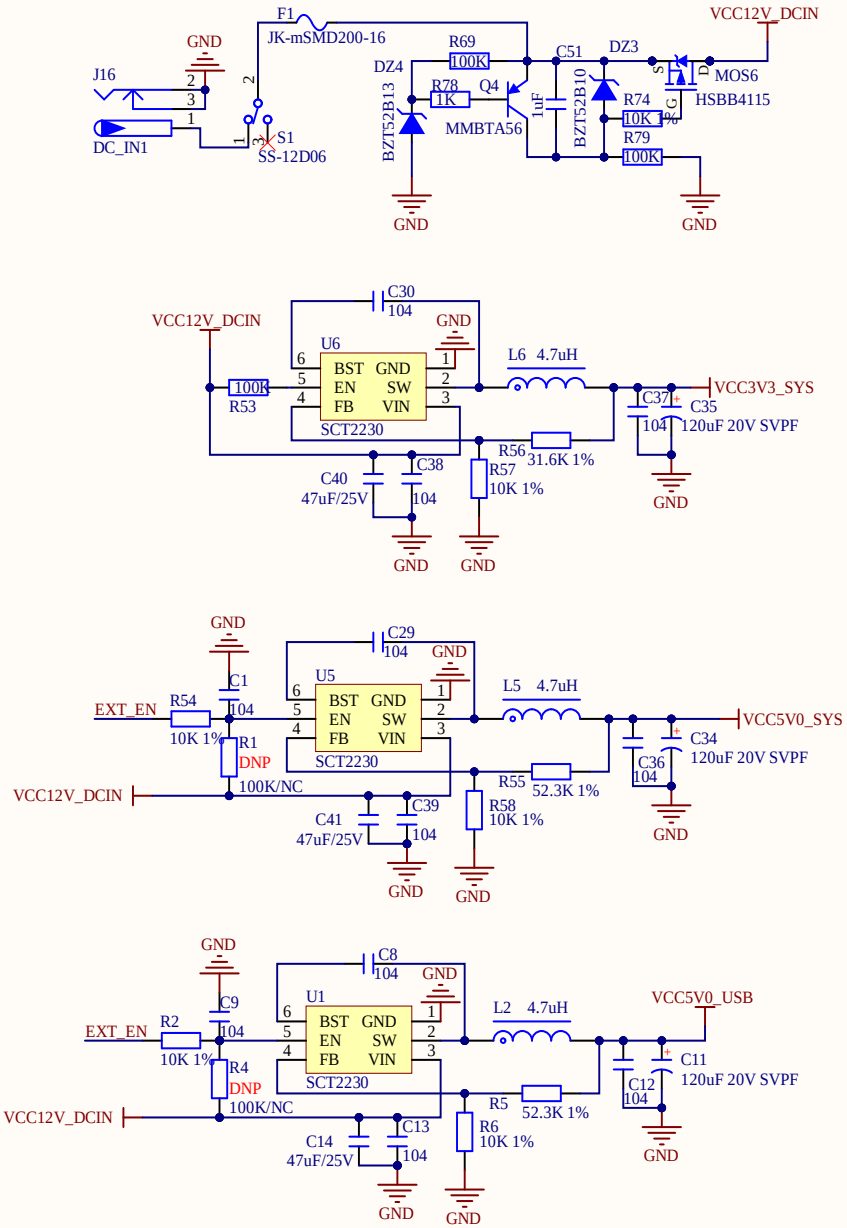

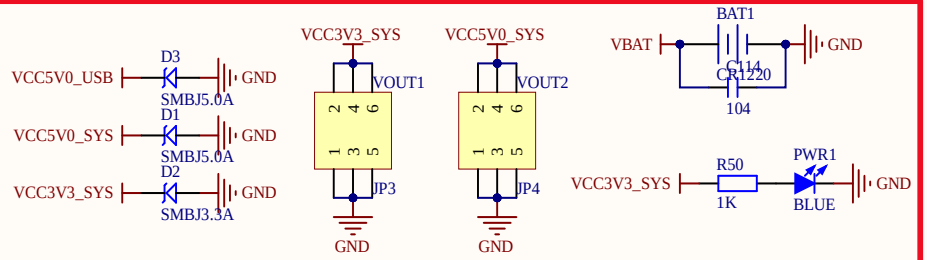

IO

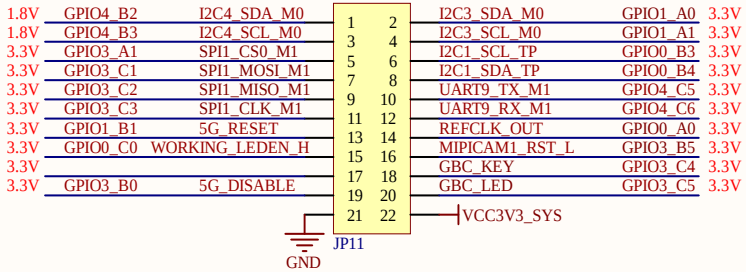

USB USART&USB POWER

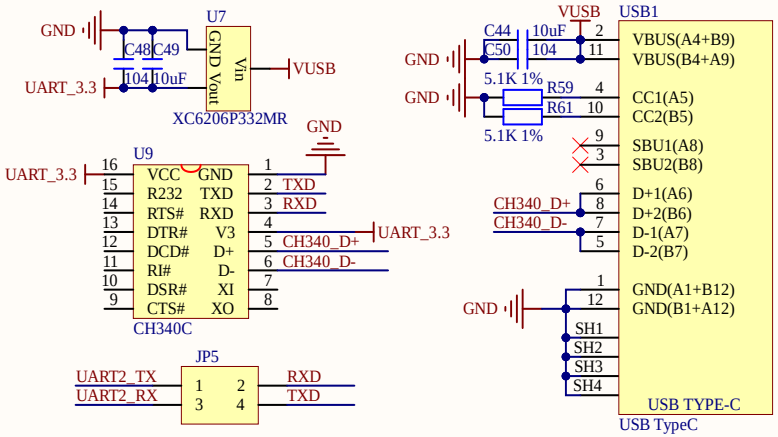

Title: ATK_RK3568_Power_USB.SchDoc		
Project: ATK_DLRK3568_V1.5.PrjPcb		
Size: A4	Author: ALIENTEK	
Date: 2023/7/6	Version: V1.5	Sheet: 3 of 14

正点原子

RESET

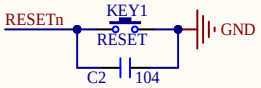

PWRON

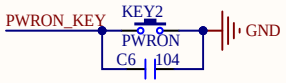

UPDATE

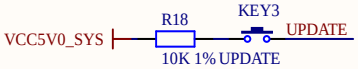

KEY

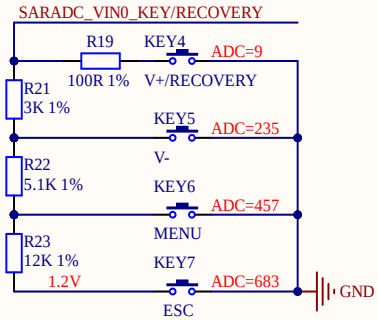

LED

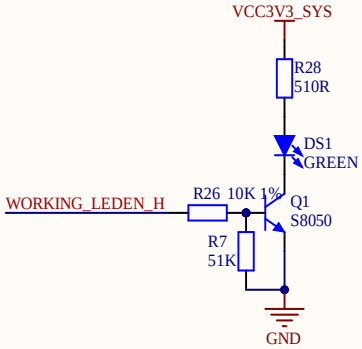

TF Card

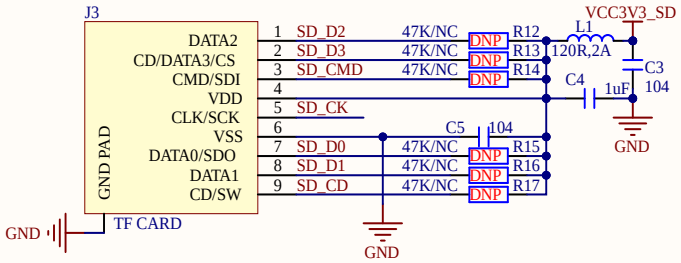

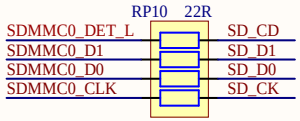

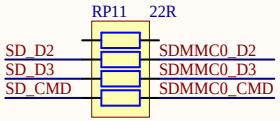

HW_ID

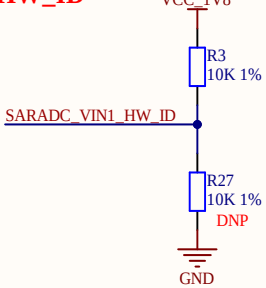

HW_ID	Rup	Rdown	ADC	
EVB1	10K	DNP	1023	1.8V
EVB2	20K	100K	852	1.5V
EVB3	18K	36K	681	1.2V
EVB4	51K	51K	512	0.9V
EVB5	36K	18K	340	0.6V
EVB6	100K	20K	170	0.3V
EVB7	DNP	10K	0	0V

6 AXIS SENSOR

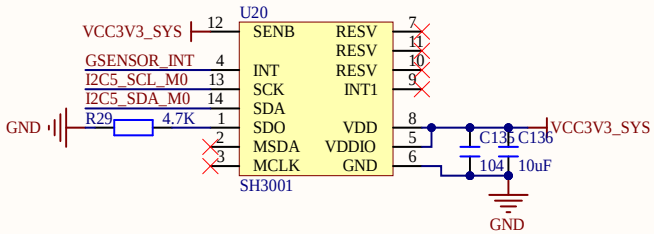

SH3001 IIC Address:0X36

MIPI CSI

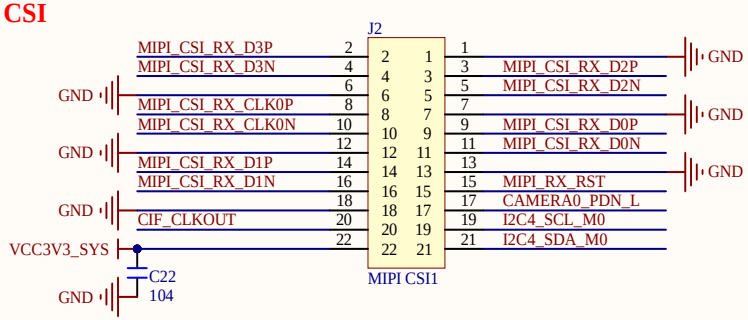

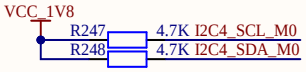

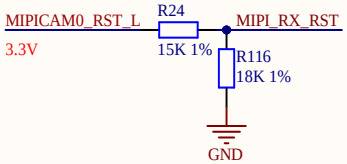

MIPI DSI

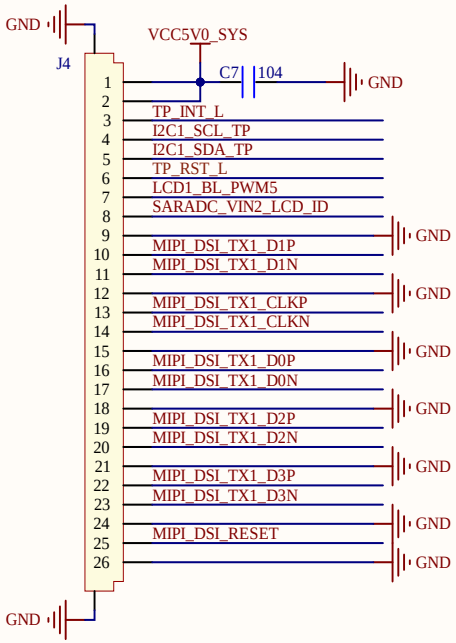

Title: ATK_RK3568_DEVICE1.SchDoc		
Project: ATK_DLRK3568_V1.5.PrjPcb		
Size: A4	Author: zuo	
Date: 2023/7/6	Version: V1.5	Sheet: 4 of 14

正点原子

RS485

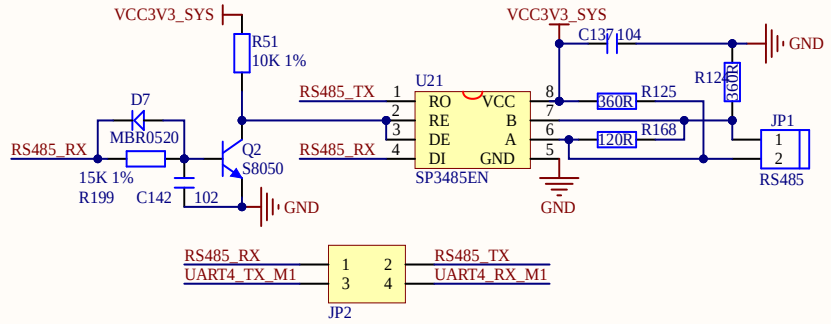

ALS&PS SENSOR

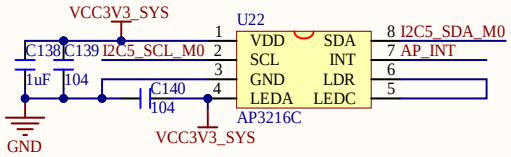

ADC

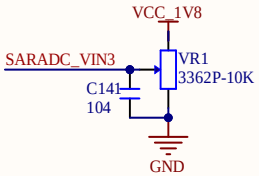

RS232

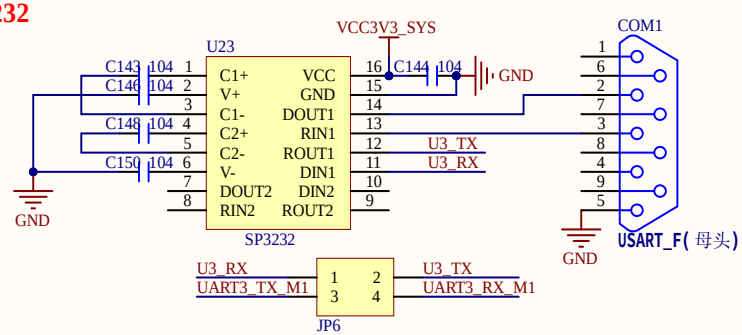

RTC

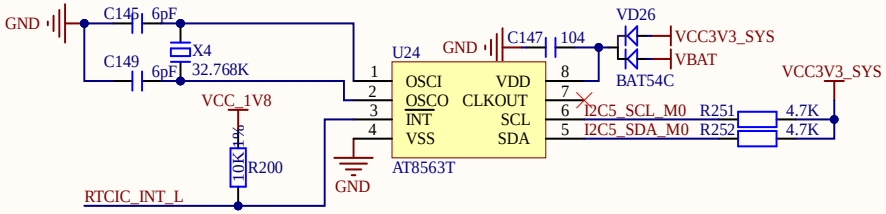

FD CAN

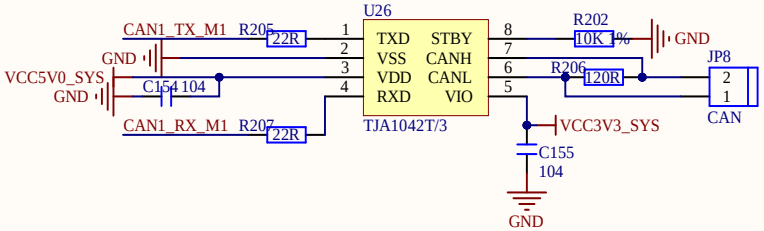

FAN

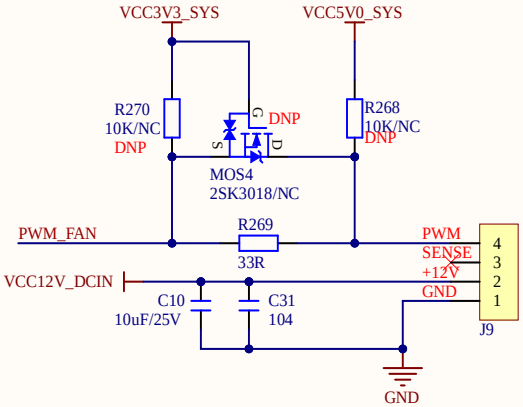

IR RECEIVER

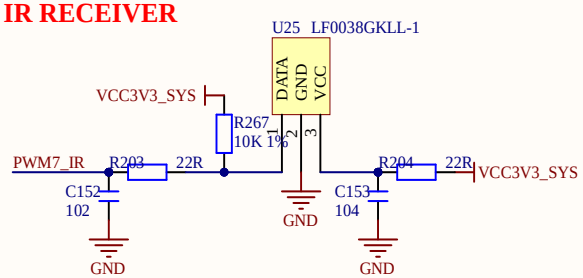

Title: ATK_RK3568_DEVICE2.SchDoc		
Project: ATK_DLRK3568_V1.5.PrjPcb		
Size: A4	Author: ALIENTEK	
Date: 2023/7/6	Version: V1.5	Sheet: 5 of 14

正点原子

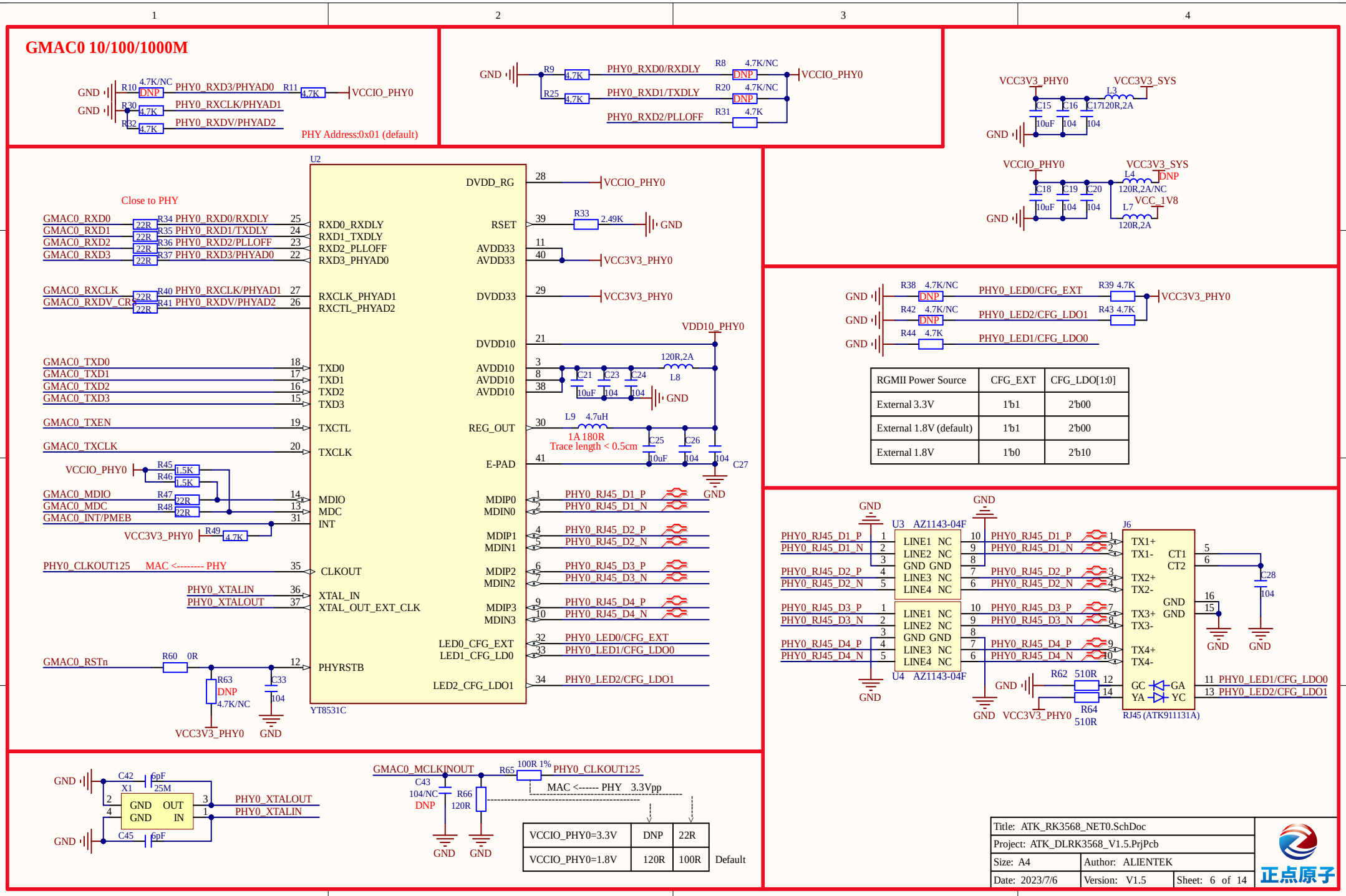

RGMII Power Source	CFG_EXT	CFG_LDO[1:0]
External 3.3V	1'b1	2'b00
External 1.8V (default)	1'b1	2'b00
External 1.8V	1'b0	2'b10

VCCIO_PHY0=3.3V	DNP	22R	
VCCIO_PHY0=1.8V	120R	100R	Default

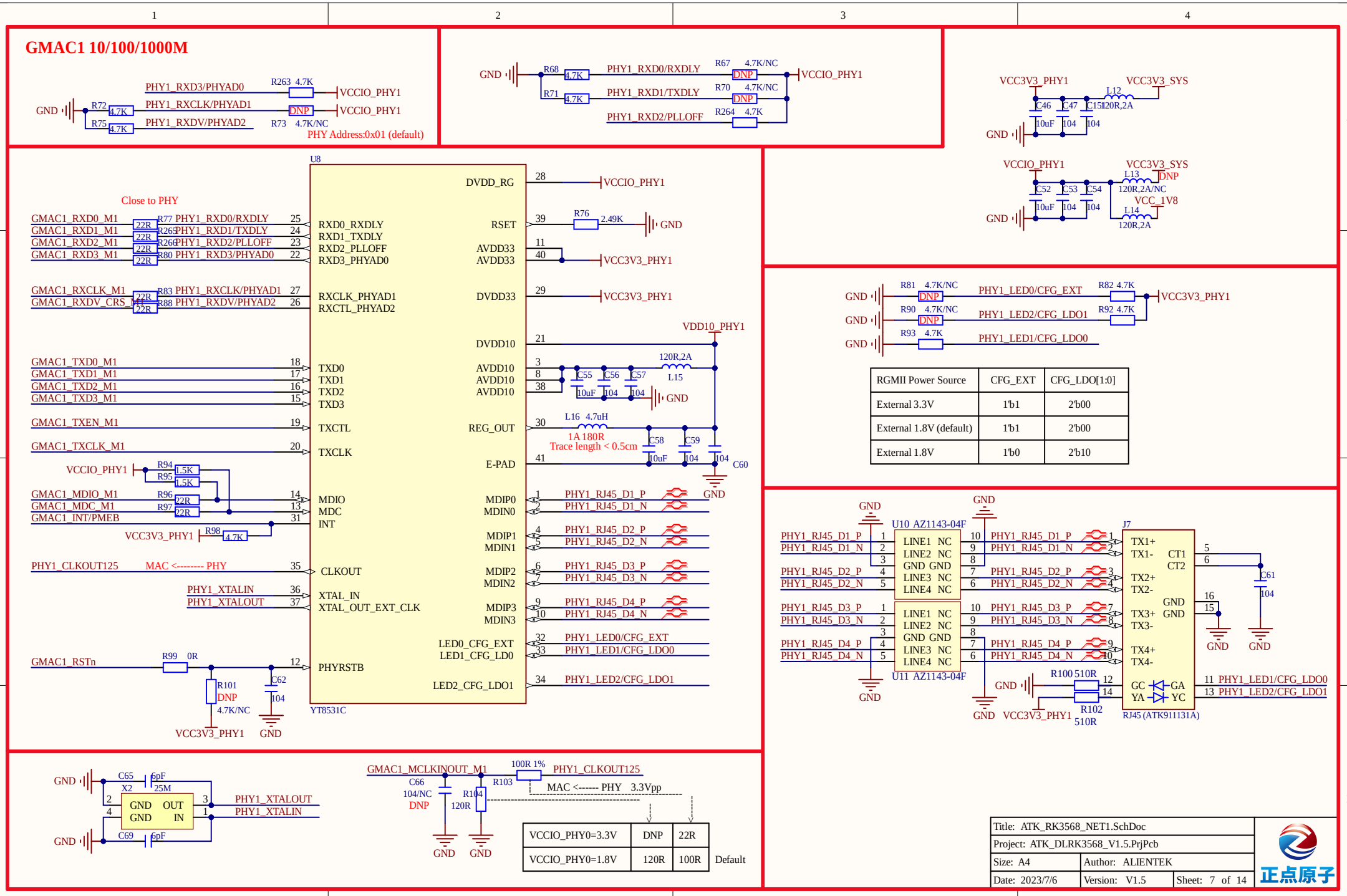
GMAC1 10/100/1000M
PHY1_RXD3/PHYAD0
PHY1_RXCLK/PHYAD1
PHY1_RXDV/PHYAD2
R263 4.7K
R72 4.7K
R75 4.7K
R73 4.7K/NC
DNP
VCCIO_PHY1
PHY Address:0x01 (default)
R68 4.7K
R71 4.7K
PHY1_RXD0/RXDLY
PHY1_RXD1/TXDLY
PHY1_RXD2/PLLOFF
R67 4.7K/NC
R70 4.7K/NC
R264 4.7K
VCC3V3_PHY1
VCC3V3_SYS
L12 120R,2A
C46 C47 C151
10uF 104 104
VCCIO_PHY1
VCC3V3_SYS
L13 DNP
120R,2A/NC
VCC_1V8
L14 120R,2A
C52 C53 C54
10uF 104 104
U8
YT8531C
Close to PHY
GMAC1_RXD0_M1
GMAC1_RXD1_M1
GMAC1_RXD2_M1
GMAC1_RXD3_M1
GMAC1_RXCLK_M1
GMAC1_RXDV_CRS_M1
R77 PHY1_RXD0/RXDLY
R265 PHY1_RXD1/TXDLY
R266 PHY1_RXD2/PLLOFF
R80 PHY1_RXD3/PHYAD0
R83 PHY1_RXCLK/PHYAD1
R88 PHY1_RXDV/PHYAD2
22R
RXD0_RXDLY
RXD1_TXDLY
RXD2_PLLOFF
RXD3_PHYAD0
RXCLK_PHYAD1
RXCTL_PHYAD2
DVDD_RG
RSET
AVDD33
DVDD33
DVDD10
AVDD10
REG_OUT
E-PAD
R76 2.49K
VDD10_PHY1
120R,2A
L15
C55 C56 C57
10uF 104 104
L16 4.7uH
1A 180R
Trace length < 0.5cm
C58 C59
10uF 104 104
C60
GMAC1_TXD0_M1
GMAC1_TXD1_M1
GMAC1_TXD2_M1
GMAC1_TXD3_M1
GMAC1_TXEN_M1
GMAC1_TXCLK_M1
TXD0
TXD1
TXD2
TXD3
TXCTL
TXCLK
VCCIO_PHY1
R94 1.5K
R95 1.5K
GMAC1_MDIO_M1
GMAC1_MDC_M1
GMAC1_INT/PMEB
R96 22R
R97 22R
MDIO
MDC
INT
VCC3V3_PHY1
R98 4.7K
PHY1_CLKOUT125
MAC <-------- PHY
CLKOUT
PHY1_XTALIN
PHY1_XTALOUT
XTAL_IN
XTAL_OUT_EXT_CLK
GMAC1_RSTn
R99 0R
R101 DNP 4.7K/NC
C62 104
PHYRSTB
MDIP0
MDIN0
MDIP1
MDIN1
MDIP2
MDIN2
MDIP3
MDIN3
PHY1_RJ45_D1_P
PHY1_RJ45_D1_N
PHY1_RJ45_D2_P
PHY1_RJ45_D2_N
PHY1_RJ45_D3_P
PHY1_RJ45_D3_N
PHY1_RJ45_D4_P
PHY1_RJ45_D4_N
LED0_CFG_EXT
LED1_CFG_LD0
LED2_CFG_LDO1
PHY1_LED0/CFG_EXT
PHY1_LED1/CFG_LDO0
PHY1_LED2/CFG_LDO1
R81 4.7K/NC
R90 4.7K/NC
R93 4.7K
R82 4.7K
R92 4.7K
PHY1_LED0/CFG_EXT
PHY1_LED2/CFG_LDO1
PHY1_LED1/CFG_LDO0
RGMII Power Source | CFG_EXT | CFG_LDO[1:0]
External 3.3V | 1'b1 | 2'b00
External 1.8V (default) | 1'b1 | 2'b00
External 1.8V | 1'b0 | 2'b10
U10 AZ1143-04F
U11 AZ1143-04F
LINE1 NC
LINE2 NC
GND GND
LINE3 NC
LINE4 NC
J7
RJ45 (ATK911131A)
TX1+
TX1-
TX2+
TX2-
TX3+
TX3-
TX4+
TX4-
CT1
CT2
GC
YA
GA
YC
C61 104
R100 510R
R102 510R
PHY1_LED1/CFG_LDO0
PHY1_LED2/CFG_LDO1
C65 6pF
X2 25M
C69 6pF
GND OUT
GND IN
PHY1_XTALOUT
PHY1_XTALIN
GMAC1_MCLKINOUT_M1
C66 104/NC DNP
R103 100R 1%
R104 120R
PHY1_CLKOUT125
MAC <------ PHY 3.3Vpp
VCCIO_PHY0=3.3V | DNP | 22R
VCCIO_PHY0=1.8V | 120R | 100R | Default
Title: ATK_RK3568_NET1.SchDoc
Project: ATK_DLRK3568_V1.5.PrjPcb
Size: A4
Author: ALIENTEK
Date: 2023/7/6
Version: V1.5
Sheet: 7 of 14
正点原子

HDMI

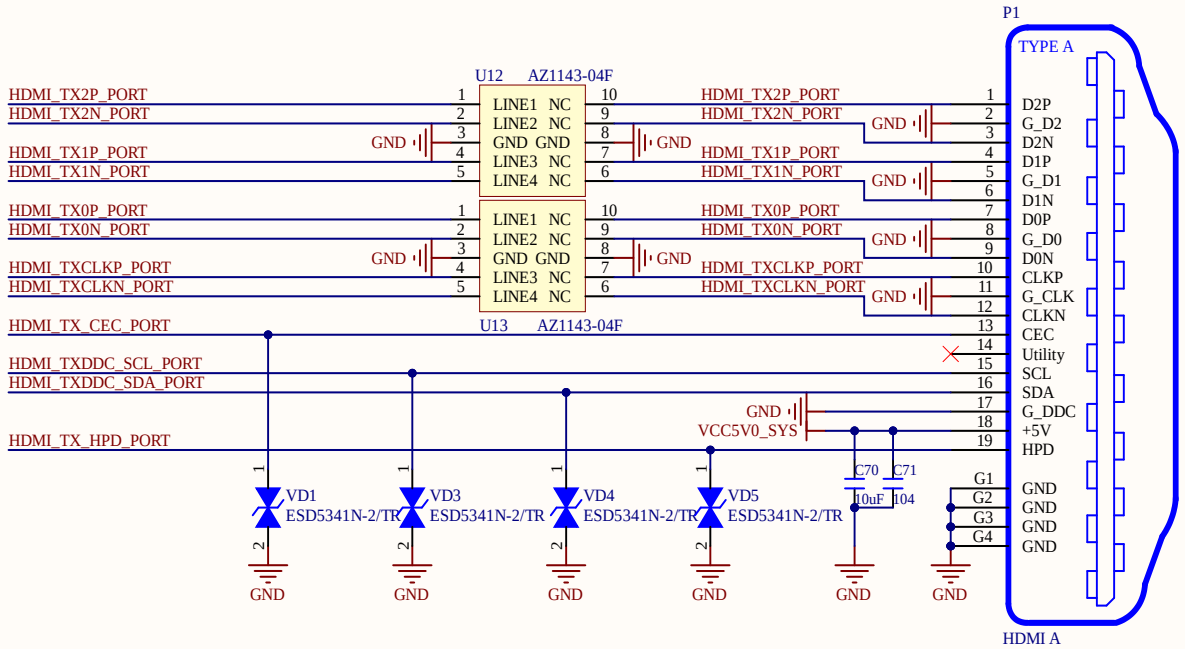

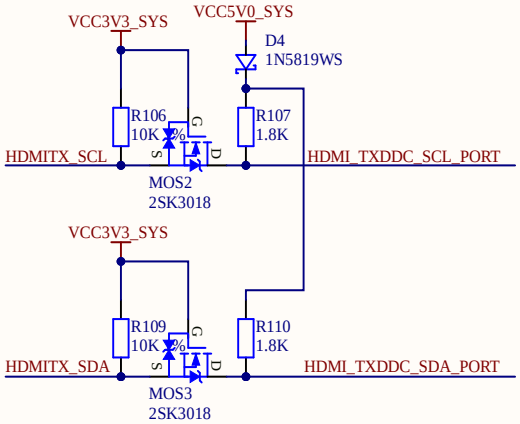

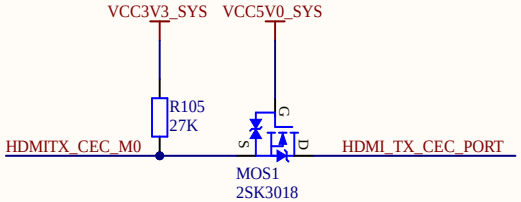

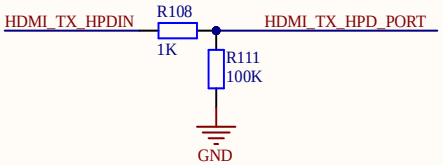

Title: ATK_RK3568_HDMI.SchDoc		
Project: ATK_DLRK3568_V1.5.PrjPcb		
Size: A4	Author: ALIENTEK	
Date: 2023/7/6	Version: V1.5	Sheet: 8 of 14

正点原子

AUDIO

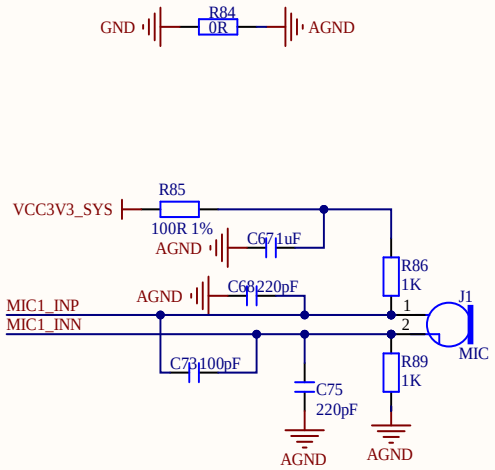

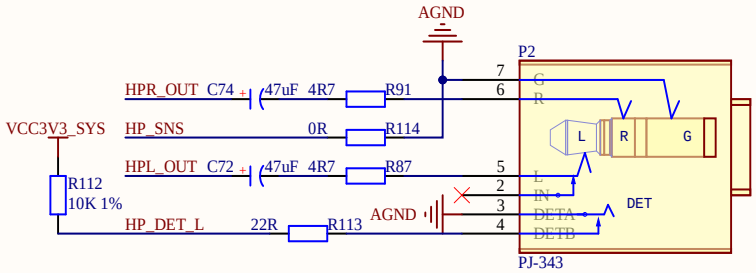

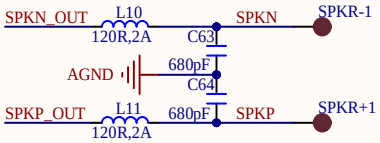

Title: ATK_RK3568_Audio.SchDoc		
Project: ATK_DLRK3568_V1.5.PrjPcb		
Size: A4	Author: ALIENTEK	
Date: 2023/7/6	Version: V1.5	Sheet: 9 of 14

正点原子

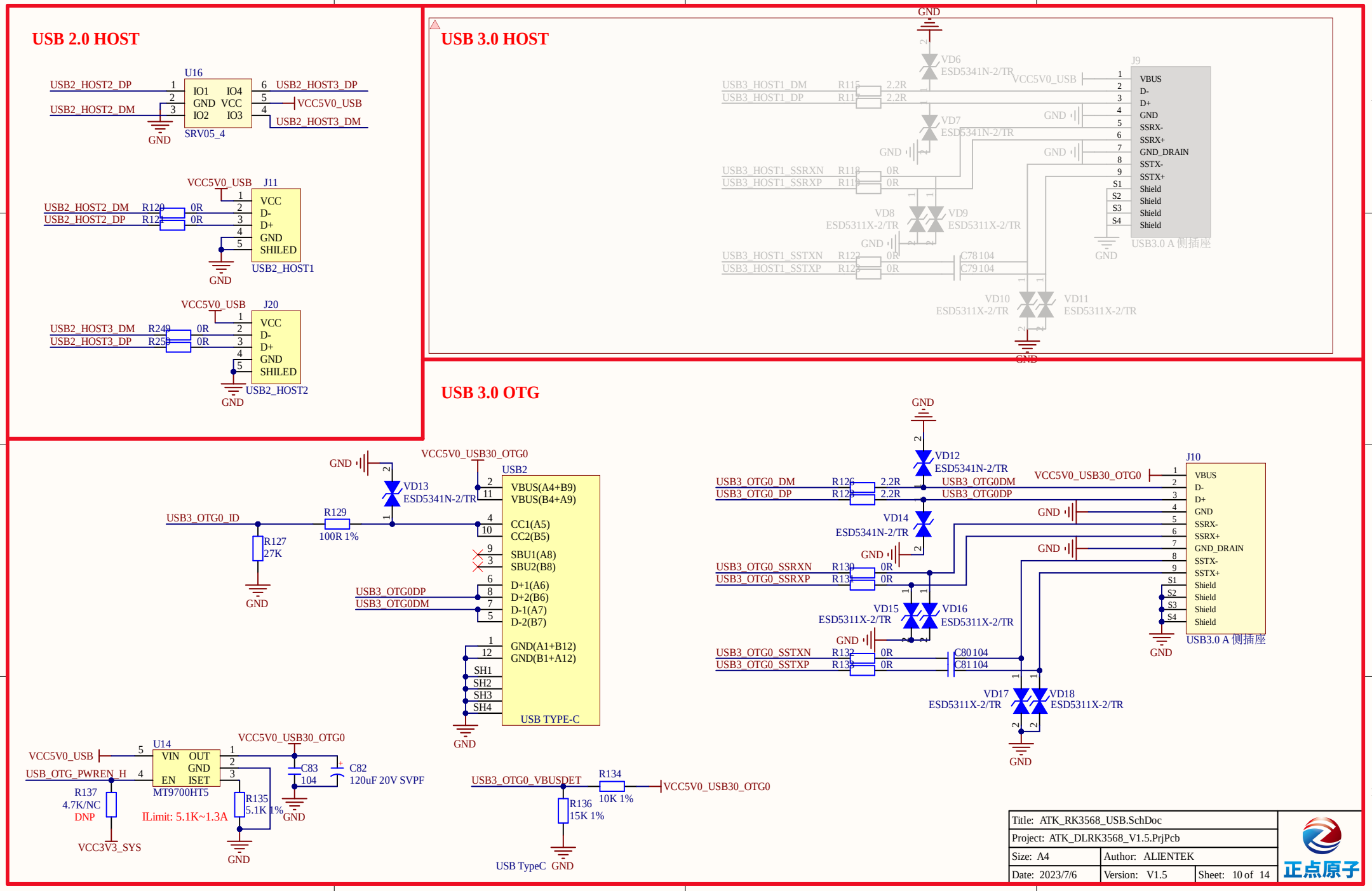
USB 2.0 HOST
U16
USB2_HOST2_DP
USB2_HOST2_DM
IO1 IO4
GND VCC
IO2 IO3
SRV05_4
USB2_HOST3_DP
VCC5V0_USB
USB2_HOST3_DM
GND
VCC5V0_USB J11
USB2_HOST2_DM R120 0R
USB2_HOST2_DP R121 0R
VCC
D-
D+
GND
SHILED
USB2_HOST1
VCC5V0_USB J20
USB2_HOST3_DM R249 0R
USB2_HOST3_DP R253 0R
USB2_HOST2
USB 3.0 HOST
VD6 ESD5341N-2/TR
VCC5V0_USB
J9
USB3_HOST1_DM R115 2.2R
USB3_HOST1_DP R117 2.2R
VD7 ESD5341N-2/TR
USB3_HOST1_SSRXN R118 0R
USB3_HOST1_SSRXP R119 0R
VD8 ESD5311X-2/TR
VD9 ESD5311X-2/TR
USB3_HOST1_SSTXN R122 0R
USB3_HOST1_SSTXP R123 0R
C78 104
C79 104
VD10 ESD5311X-2/TR
VD11 ESD5311X-2/TR
VBUS
D-
D+
GND
SSRX-
SSRX+
GND_DRAIN
SSTX-
SSTX+
Shield
USB3.0 A 侧插座
USB 3.0 OTG
VCC5V0_USB30_OTG0
USB2
VD13 ESD5341N-2/TR
USB3_OTG0_ID
R129 100R 1%
R127 27K
VBUS(A4+B9)
VBUS(B4+A9)
CC1(A5)
CC2(B5)
SBU1(A8)
SBU2(B8)
D+1(A6)
D+2(B6)
D-1(A7)
D-2(B7)
USB3_OTG0DP
USB3_OTG0DM
GND(A1+B12)
GND(B1+A12)
SH1
SH2
SH3
SH4
USB TYPE-C
VD12 ESD5341N-2/TR
USB3_OTG0_DM R126 2.2R
USB3_OTG0_DP R128 2.2R
VD14 ESD5341N-2/TR
USB3_OTG0_SSRXN R130 0R
USB3_OTG0_SSRXP R131 0R
VD15 ESD5311X-2/TR
VD16 ESD5311X-2/TR
USB3_OTG0_SSTXN R132 0R
USB3_OTG0_SSTXP R133 0R
C80 104
C81 104
VD17 ESD5311X-2/TR
VD18 ESD5311X-2/TR
J10
U14
VCC5V0_USB
USB_OTG_PWREN_H
VIN OUT
GND
EN ISET
MT9700HT5
R137 4.7K/NC DNP
VCC3V3_SYS
ILimit: 5.1K~1.3A
R135 5.1K 1%
C83 104
C82 120uF 20V SVPF
USB3_OTG0_VBUSDET
R134 10K 1%
R136 15K 1%
USB TypeC
Title: ATK_RK3568_USB.SchDoc
Project: ATK_DLRK3568_V1.5.PrjPcb
Size: A4
Author: ALIENTEK
Date: 2023/7/6
Version: V1.5
Sheet: 10 of 14
正点原子

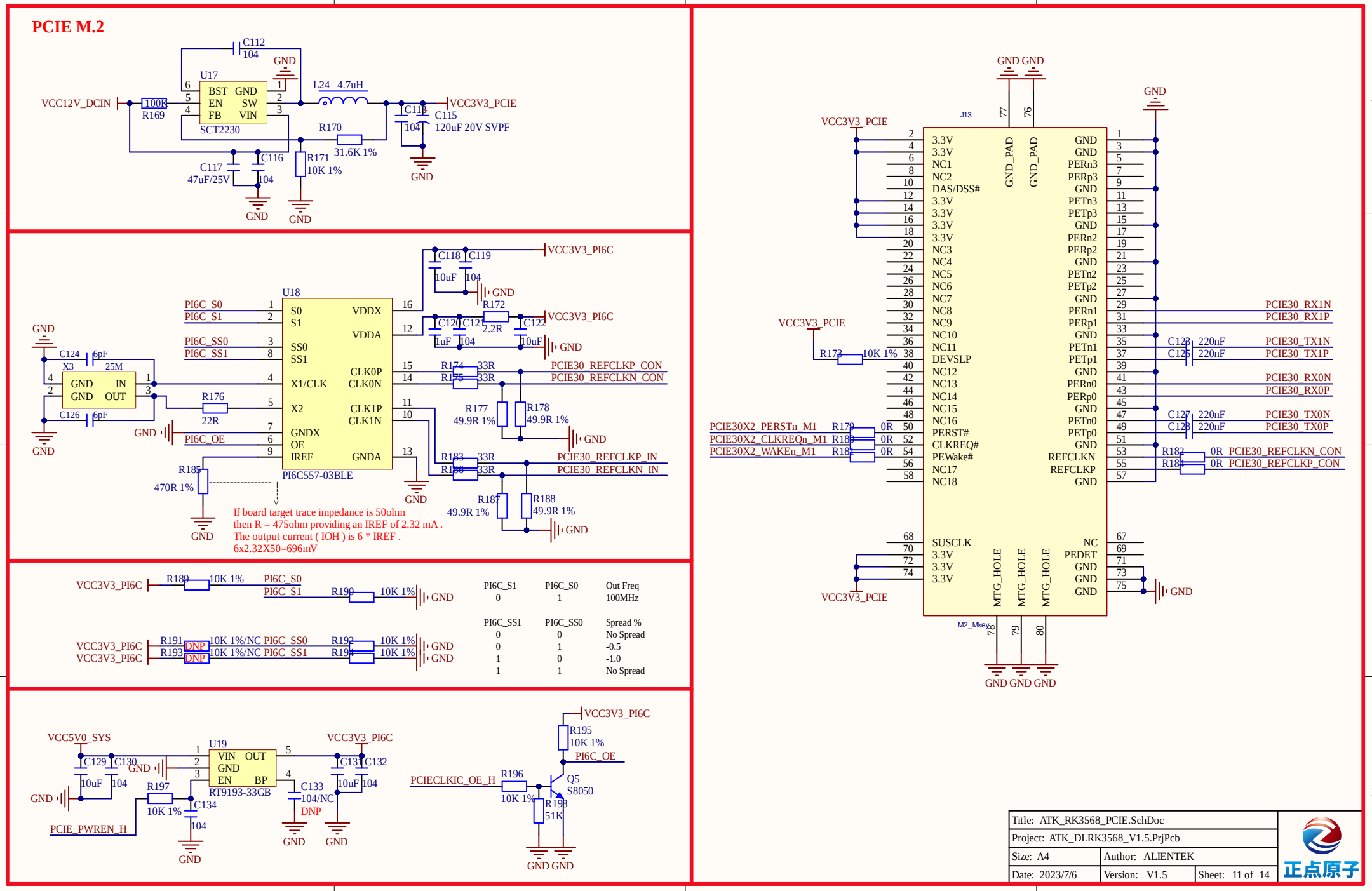
PCIE M.2
U17
SCT2230
BST GND
EN SW
FB VIN
VCC12V_DCIN
R169 100R
C112 104
L24 4.7uH
VCC3V3_PCIE
C115 120uF 20V SVPF
C118 104
R170 31.6K 1%
R171 10K 1%
C116 104
C117 47uF/25V
GND
U18
PI6C557-03BLE
S0 S1 SS0 SS1 X1/CLK X2 GNDX OE IREF
VDDX VDDA CLK0P CLK0N CLK1P CLK1N GNDA
PI6C_S0 PI6C_S1 PI6C_SS0 PI6C_SS1 PI6C_OE
VCC3V3_PI6C
C118 C119 10uF 104
R172 2.2R
C120 C121 1uF 104
C122 10uF
PCIE30_REFCLKP_CON
PCIE30_REFCLKN_CON
R174 33R
R175 33R
R177 49.9R 1%
R178 49.9R 1%
R183 33R
R186 33R
PCIE30_REFCLKP_IN
PCIE30_REFCLKN_IN
R187 49.9R 1%
R188 49.9R 1%
X3 25M
GND IN
GND OUT
C124 6pF
C126 6pF
R176 22R
R185 470R 1%
If board target trace impedance is 50ohm
then R = 475ohm providing an IREF of 2.32 mA .
The output current (IOH) is 6 * IREF .
6x2.32X50=696mV
R189 10K 1%
R190 10K 1%
R191 10K 1%/NC
R193 10K 1%/NC
R192 10K 1%
R194 10K 1%
DNP
PI6C_S0 PI6C_S1 PI6C_SS0 PI6C_SS1
PI6C_S1 PI6C_S0 Out Freq
0 1 100MHz
PI6C_SS1 PI6C_SS0 Spread %
0 0 No Spread
0 1 -0.5
1 0 -1.0
1 1 No Spread
VCC5V0_SYS
U19
RT9193-33GB
VIN OUT
GND
EN BP
C129 10uF
C130 104
R197 10K 1%
C134 104
PCIE_PWREN_H
C133 104/NC DNP
C131 10uF
C132 104
PCIECLKIC_OE_H
R196 10K 1%
R195 10K 1%
PI6C_OE
Q5 S8050
R198 51K
GND GND
J13
3.3V NC1 NC2 DAS/DSS# NC3 NC4 NC5 NC6 NC7 NC8 NC9 NC10 NC11 DEVSLP NC12 NC13 NC14 NC15 NC16 PERST# CLKREQ# PEWake# NC17 NC18
GND_PAD
GND PERn3 PERp3 PETn3 PETp3 PERn2 PERp2 PETn2 PETp2 PERn1 PERp1 PETn1 PETp1 PERn0 PERp0 PETn0 PETp0 REFCLKN REFCLKP
SUSCLK 3.3V
NC PEDET
MTG_HOLE
M2_Mkey
R173 10K 1%
PCIE30X2_PERSTn_M1 R179 0R
PCIE30X2_CLKREQn_M1 R180 0R
PCIE30X2_WAKEn_M1 R181 0R
PCIE30_RX1N PCIE30_RX1P
PCIE30_TX1N PCIE30_TX1P
PCIE30_RX0N PCIE30_RX0P
PCIE30_TX0N PCIE30_TX0P
C123 220nF C125 220nF
C127 220nF C128 220nF
R182 0R PCIE30_REFCLKN_CON
R184 0R PCIE30_REFCLKP_CON
Title: ATK_RK3568_PCIE.SchDoc
Project: ATK_DLRK3568_V1.5.PrjPcb
Size: A4
Author: ALIENTEK
Date: 2023/7/6
Version: V1.5
Sheet: 11 of 14
正点原子

SATA3.0

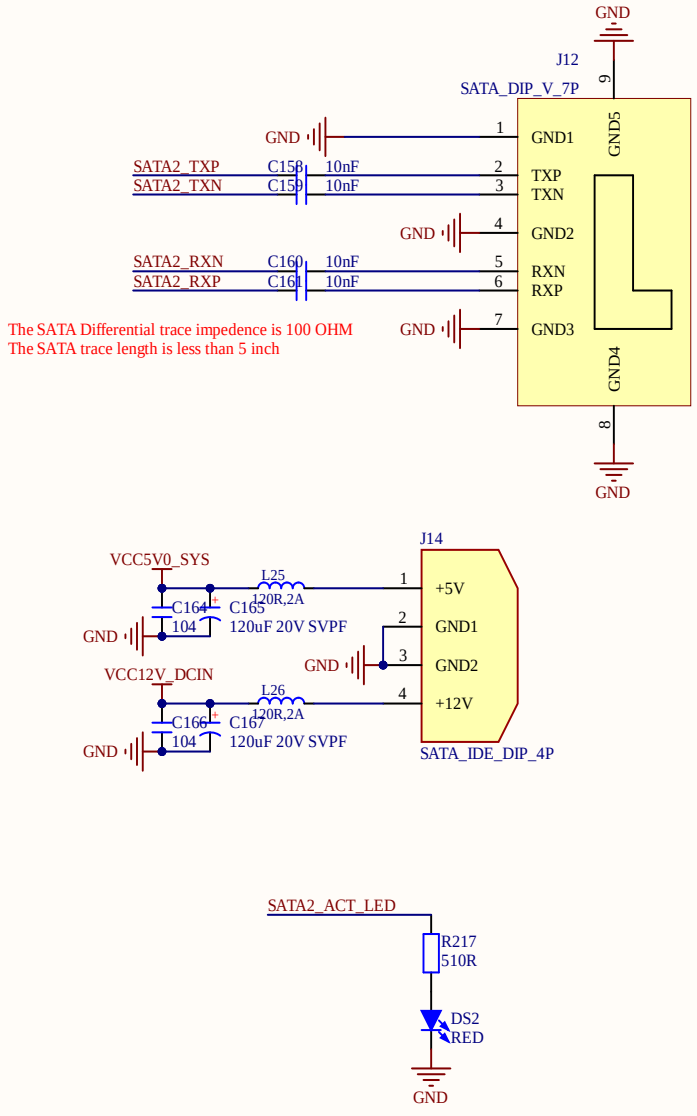

LVDS

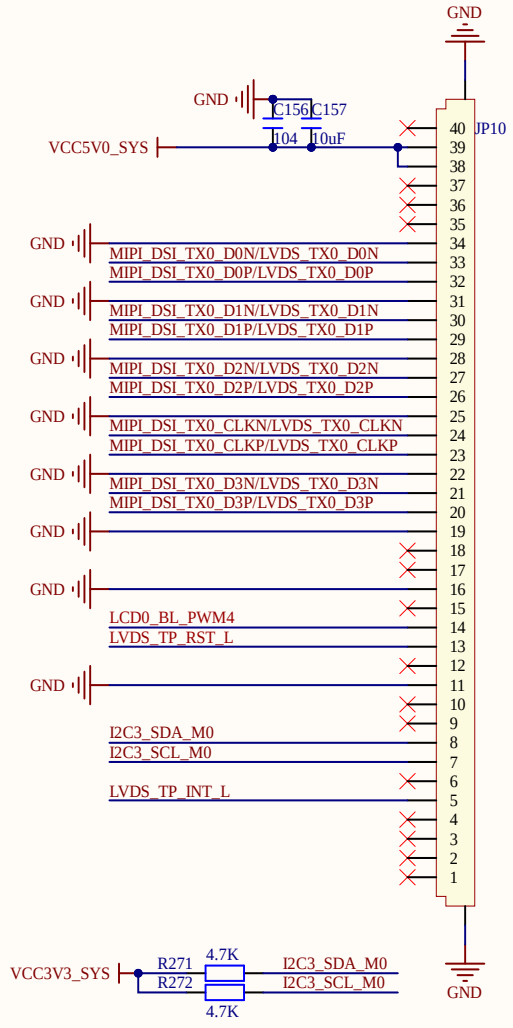

EDP

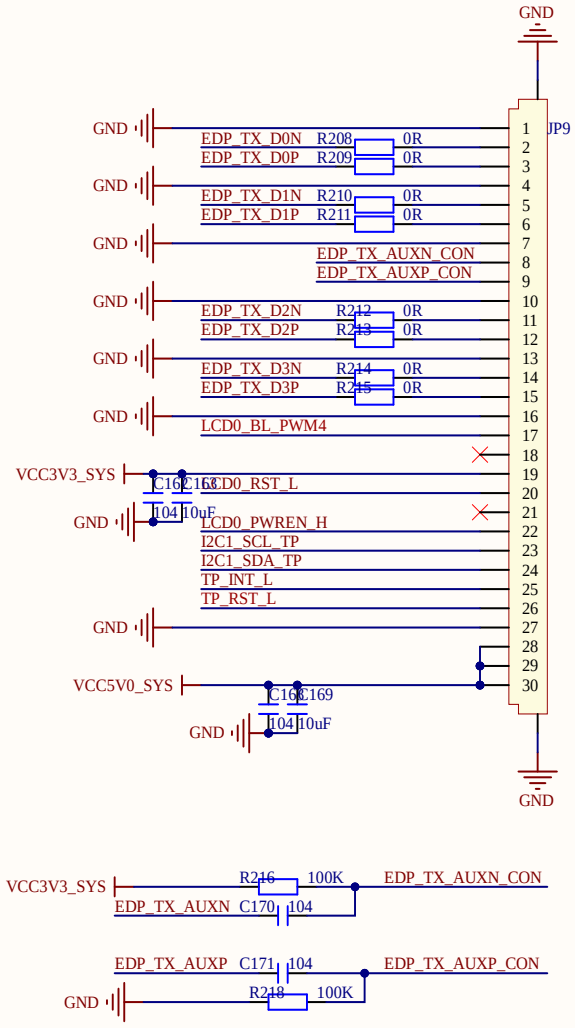

Title: ATK_RK3568_SATA_LVDS_EDP.SchDoc		
Project: ATK_DLRK3568_V1.5.PrjPcb		
Size: A4	Author: ALIENTEK	
Date: 2023/7/6	Version: V1.5	Sheet: 12 of 14

正点原子

WIFI

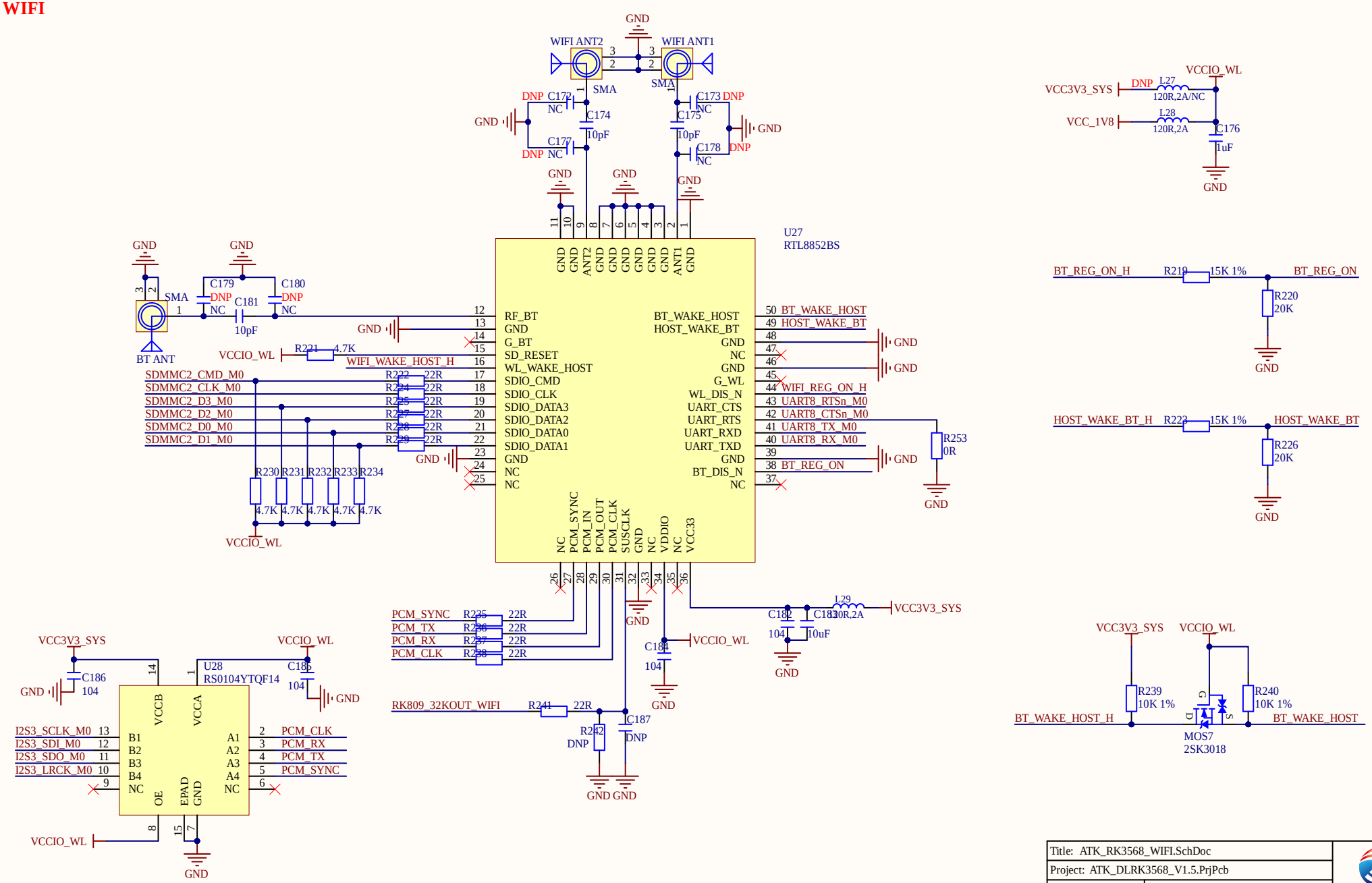

Title: ATK_RK3568_WIFI.SchDoc		
Project: ATK_DLRK3568_V1.5.PrjPcb		
Size: A4	Author: ALIENTEK	
Date: 2023/7/6	Version: V1.5	Sheet: 13 of 14

正点原子

5G MODULE

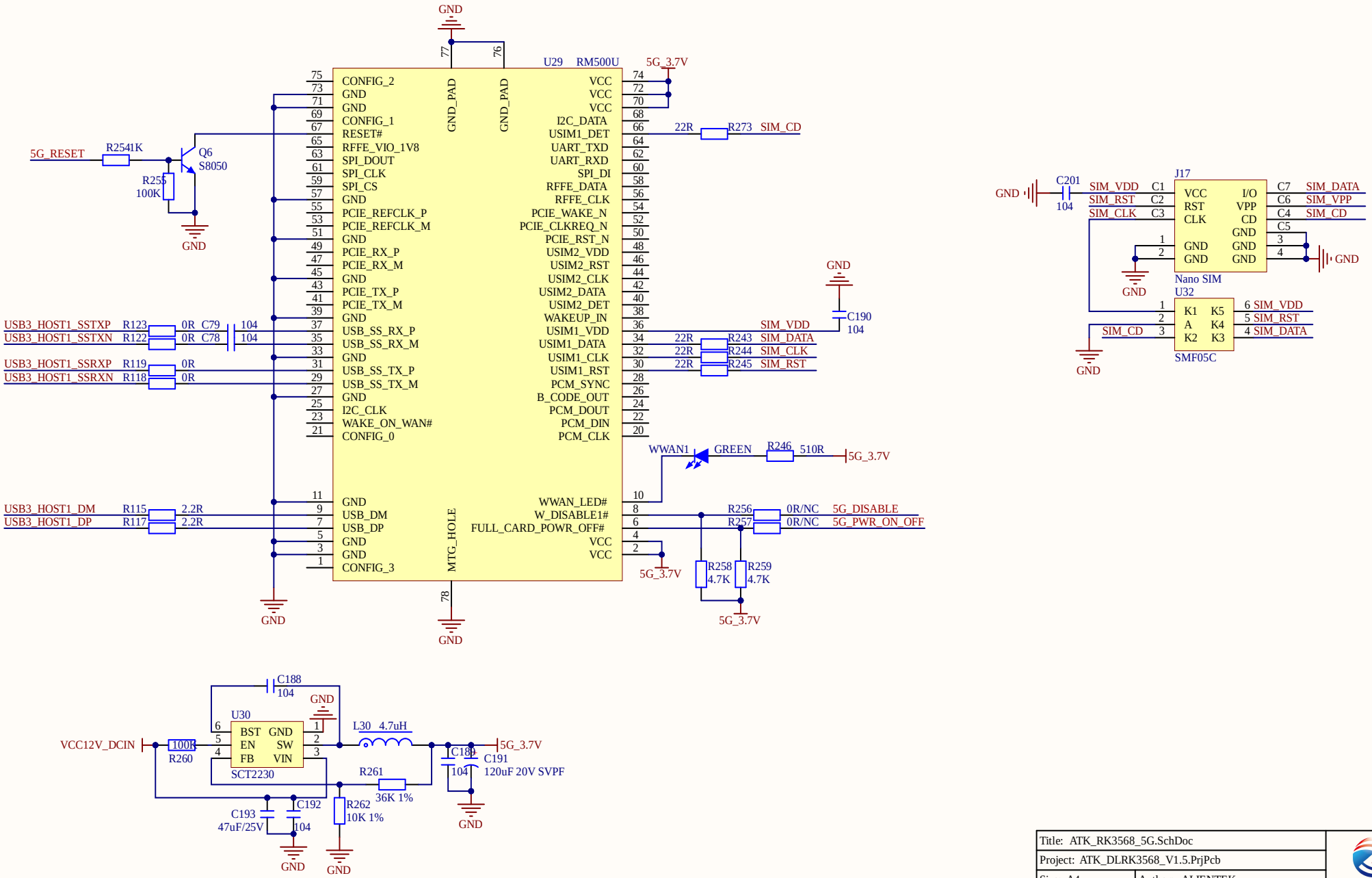

Title: ATK_RK3568_5G.SchDoc		
Project: ATK_DLRK3568_V1.5.PrjPcb		
Size: A4	Author: ALIENTEK	
Date: 2023/7/6	Version: V1.5	Sheet: 14 of 14

正点原子

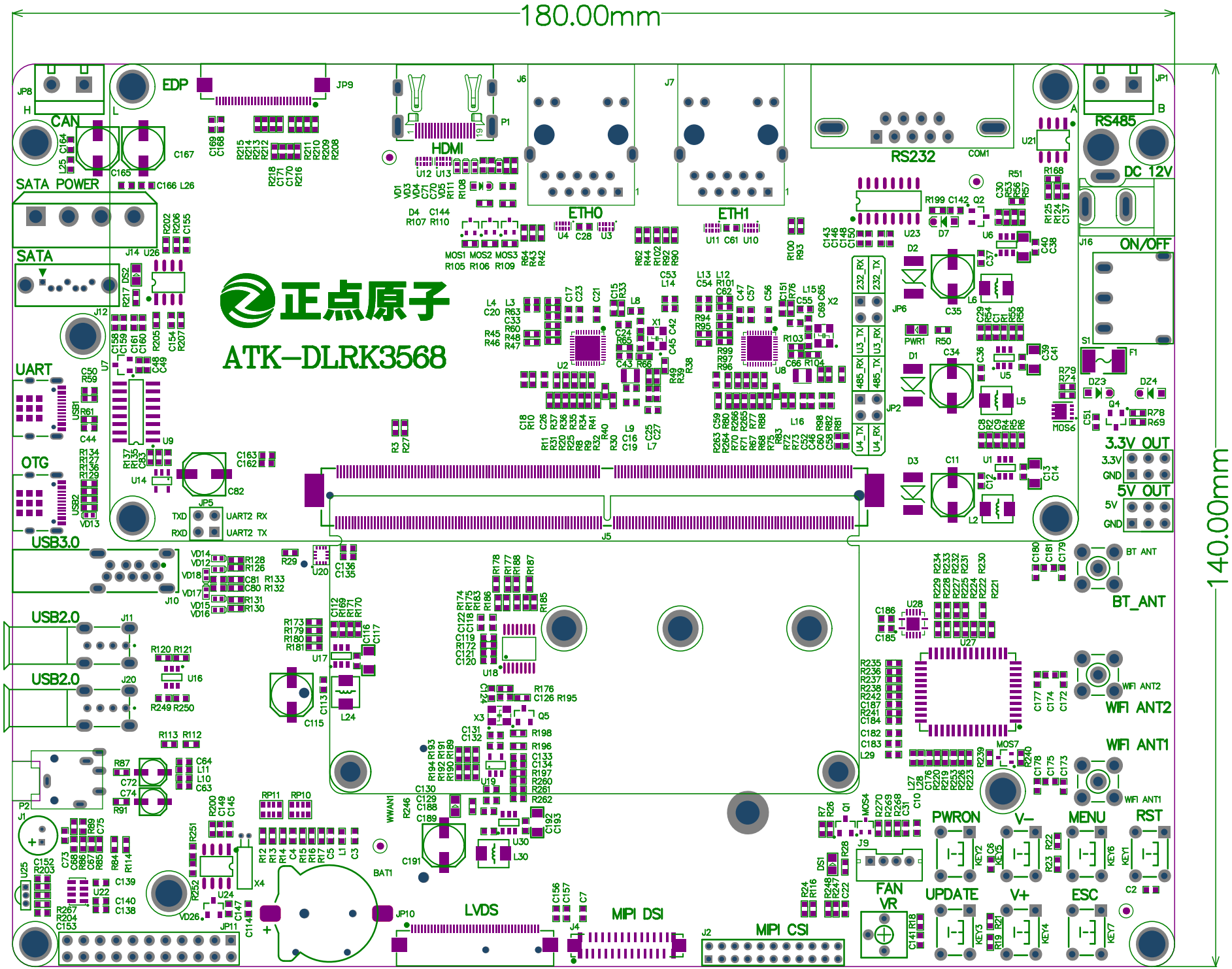
180.00mm
140.00mm
正点原子
ATK-DLRK3568
EDP
JP9
JP8
CAN
SATA POWER
SATA
UART
OTG
USB3.0
USB2.0
USB2.0
HDMI
P1
J6
J7
ETH0
ETH1
RS232
COM1
RS485
DC 12V
ON/OFF
3.3V OUT
5V OUT
BT_ANT
WIFI ANT2
WIFI ANT1
PWRON
V-
MENU
RST
UPDATE
V+
ESC
FAN
VR
LVDS
MIPI DSI
MIPI CSI
J5
J10
J11
J20
J12
J14
J16
JP1
JP5
JP6
JP2
JP10
JP11
P2
J1
J9
J2
J4
BAT1
WWAN1
TXD
RXD
UART2 RX
UART2 TX
232_RX
232_TX
U3_TX
U3_RX
485_RX
485_TX
U4_TX
U4_RX
3.3V
GND
5V
GND