Secure Grade: Top-secret( ) Secret( ) Internal( ) Public(√)

RV1126 & RV1126B-P Differences Description and Compatibility Design Notes

Fuzhou Hardware Development Center
Linus.Lin

瑞芯微电子股份有限公司
Rockchip Electronics Co., Ltd.

Version：V1.25

CONTENTS

01 **功能差异** / Function Difference

02 **规格差异** / Specification Difference

03 **Pin to Pin封装硬件管脚差异与兼容设计说明**
Pin to Pin Packaging Hardware Pin Differences, and Compatibility Design Description

04 **Pin to Pin封装硬件BOM差异**
Pin to Pin Packaging Hardware BOM Differences

功能差异 Function Difference

	RV1126	RV1126B-P (pin to pin)	RV1126B
快启 Fast-booting	支持 Support	支持 Support	支持 Support
AOV	支持 Support	支持(功耗更低) Support (Lower power consumption)	支持(功耗更低) Support (Lower power consumption)
预录 Pre-recording	N/A	N/A	支持 Support

规格差异 Specification Difference

	RV1126	RV1126B-P (pin to pin)	RV1126B
CPU	4*A7	4*A53	4*A53
Audio	SAI(I2S/PCM/TDM)+PDM +2*DSM(PWM Audio)	SAI(I2S/PCM/TDM)+PDM +2*DSM(PWM Audio)	SAI(I2S/PCM/TDM)+PDM +2*DSM(PWM Audio) +2*Audio ADC
SARADC	6	6	24
PWM	16	28	28
MIPI CSI	2 x 4lane	2 x 4lane	2 x 4lane/4 x 2lane
USB	USB2.0 DRD +USB2.0 HOST	USB2.0 DRD +USB2.0 HOST	USB2.0/3.0 DRD +USB2.0 HOST
RTC	N/A	N/A	Built-in
Ethernet	GMAC	GMAC	GMAC+FEPHY
nPOR	N/A	Built-in	Built-in
FLASH	EMMC/SPI Flash Parallel NAND Flash	EMMC/SPI Flash	EMMC/SPI Flash

Pin to Pin 封装硬件管脚差异与兼容设计说明

Pin to Pin Packaging Hardware Pin Differences, and Compatibility Design Description

	RV1126	RV1126B-P (pin to pin)	兼容设计说明 Compatibility Design
L9/M9/N8/N9	VEPU_VDD	NC2/NC3/NC4/NC5	1.独立供电设计可删除电源 2.合并供电设计无需修改 1. Independent power supply design: the power source can be removed. 2. Combined power supply design: no modifications are required.
R10	PMUIO_VDD_1V8	NC_6	无需修改 No modification required
U5	HOST_EXTR	NC_7	无需修改 No modification required
U6	OTG_EXTR	NC_8	无需修改 No modification required
Y8	FLASH_VOL_SEL/GPIO0_B3	NC_9	无需修改 No modification required
T8	TVSS	VSS	无需修改 No modification required
H14	VCCIO_VDD_1V8	OTP_VCC_1V8	无需修改 No modification required

Pin to Pin 封装硬件管脚差异与兼容设计说明

Pin to Pin Packaging Hardware Pin Differences, and Compatibility Design Description

	RV1126	RV1126B-P (pin to pin)	兼容设计说明 Compatibility Design
PMUIO0_VDD供电(pin R9) PMUIO0_VDD power supply (pin R9)	1.8V/3.3V	3.3V only	无法完全兼容，1.8V PCB需要改板 Not fully compatible, the 1.8V PCB needs to be modified
I2C同时使用 I2C Simultaneous Use	I2C1_SCL(pin Y21) I2C1_SDA(pin W19) I2C4_SCL_M1(pin U11) I2C4_SDA_M1(pin V11)	I2C1_SCL_M2(pin Y21) I2C1_SDA_M2(pin W19) I2C1_SCL_M3(pin U11) I2C1_SDA_M3(pin V11)	其中一组需要使用GPIO模拟 One of the groups needs to use GPIO simulation
	I2C2_SCL(pin AA6) I2C2_SDA(pin Y6) I2C4_SCL_M0(pin E20) I2C4_SDA_M0(pin E19)	I2C2_SCL_M0(pin AA6) I2C2_SDA_M0(pin Y6) I2C2_SCL_M1(pin E20) I2C2_SDA_M1(pin E19)	其中一组需要使用GPIO模拟 One of the groups needs to use GPIO simulation

Pin to Pin 封装硬件管脚差异与兼容设计说明

Pin to Pin Packaging Hardware Pin Differences, and Compatibility Design Description

	RV1126	RV1126B-P (pin to pin)	兼容设计说明 Compatibility Design
I2S0_M0	I2S0_SCLK_TX_M0(pin W12) I2S0_LRCK_TX_M0(pin W11) I2S0_SCLK_RX_M0(pin V12) I2S0_LRCK_RX_M0(pin Y12)	SAI0_SCLK_M0(pin W12) SAI0_LRCK_M0(pin W11) NC(pin V12) NC(pin Y12)	1.仅使用TX的话，可以兼容 2.如有使用RX的话，PCB需要改板， SCLK_TX/RX请使用SCLK(pin W12) LRCK_TX/RX请使用LRCK(pin W11) 1. If only TX is used, it is compatible 2. If RX is used, the PCB needs to be modified. Please use SCLK (pin W12) for SCLK_TX/RX and use LRCK (pin W11) for LRCK_TX/RX
I2S0_M1	I2S0_SCLK_TX_M1(pin R17) I2S0_LRCK_TX_M1(pin T18) I2S0_SCLK_RX_M1(pin T20) I2S0_LRCK_RX_M1(pin N17)	SAI0_SCLK_M1(pin R17) SAI0_LRCK_M1(pin T18) NC(pin T20) NC(pin N17)	
I2S2_M1	I2S2_SDO_M1(pin M20) I2S2_SDI_M1(pin L19) I2S2_SCLK_M1(pin L20) I2S2_LRCK_M1(pin K16) I2S2_MCLK_M1(pin K17)	SAI2_SDI2_M1(pin L17) SAI2_SDI1_M1(pin M21) SAI2_MCLK_M1(pin M20) SAI2_SDO_M1(pin L19) SAI2_SCLK_M1(pin L20) SAI2_SDI0_M1(pin K16) SAI2_LRCK_M1(pin K17)	无法完全兼容，如有使用PCB需要改板 Not fully compatible, If used PCB needs to be modified

Pin to Pin 封装硬件BOM差异
Pin to Pin Packaging Hardware BOM Differences

		RV1126	RV1126B-P (pin to pin)	BOM差异点
PMIC电源方案 PMIC Power Solution	PMIC	RK809-2	RK809-9	直接替换 Direct replacement
	VDD_LOGIC	0.825V	0.9V	修改电阻值 Modify the Resistance Value
分立电源方案1 Discrete Power Solution 1	VDD_ARM	0.72-1.0V 0.825V by default	0.8-1.15V 0.95V by default	修改电阻值 Modify the Resistance Value
	VDD_NPU_VEPU	0.72-1.0V 0.825V by default	0.8-1.1V 0.95V by default	修改电阻值 Modify the Resistance Value
	VDD_LOGIC	0.825V	0.9V	修改电阻值 Modify the Resistance Value
	VCC_0V8	0.8V	0.9V	修改LDO型号 Modify the LDO Model
分立电源方案2 (合并电源，RV1109) Discrete Power Solution 2 (combined power supply, RV1109)	VDD_ARM	0.72-1.0V 0.825V by default	0.8-1.15V 0.95V by default	修改电阻值 Modify the Resistance Value
	VDD_NPU_VEPU_LOGIC	0.72-0.88V 0.825V by default	0.85-0.95V 0.9V by default	修改电阻值 Modify the Resistance Value
	VCC_0V8	0.8V	0.9V	修改LDO型号 Modify the LDO Model

Pin to Pin 封装硬件BOM差异
Pin to Pin Packaging Hardware BOM Differences

		RV1126	RV1126B-P (pin to pin)	BOM Differences
其他 Other	DDR控制器Rzq参考电阻 DDR controller Rzq reference resistor	240ohm	120ohm	修改电阻值 Modify the Resistance Value
	USB DM上拉电路 USB DM pull-up circuit	贴片 Surface-Mounting	NC	删除器件 Remove the component
	USB VBUS分压 USB VBUS Voltage Division	1.8V分压 1.8V Voltage Division	3.0V分压 3.0V Voltage Division	修改电阻值 Modify the Resistance Value
	RESET电路 RESET Circuit	外部复位IC或PMIC External reset IC or PMIC	内部NPOR Internal NPOR	删除复位IC并修改RC PMIC方案仅修改RC Remove the reset IC and modify RC Only modify RC when PMIC solution

Pin to Pin 封装硬件BOM差异： VDD_ARM
Pin to Pin Packaging Hardware BOM Differences: VDD_ARM

- RV1126

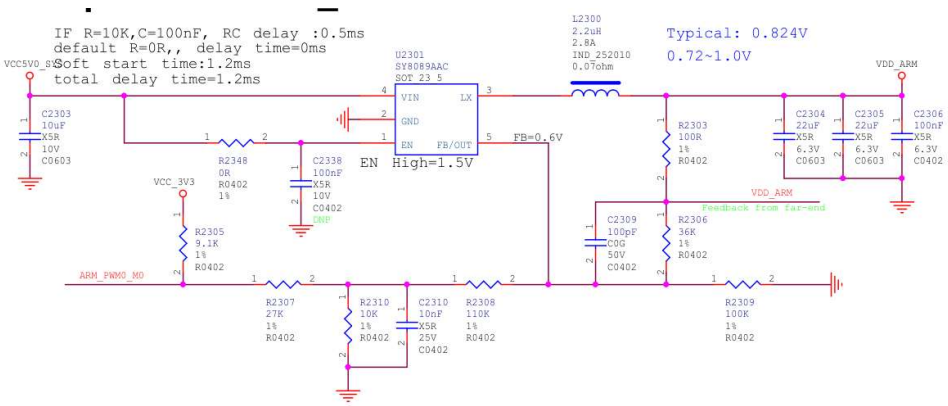

- RV1126B-P

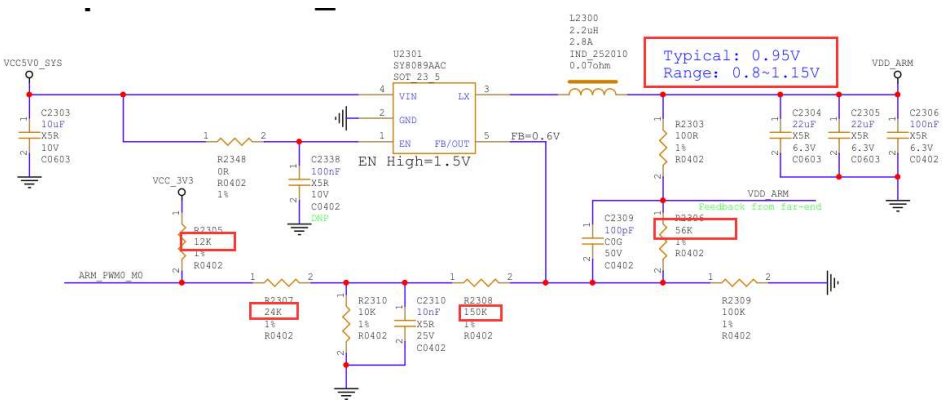

Pin to Pin 封装硬件BOM差异： VDD_NPU_VEPU
Pin to Pin Packaging Hardware BOM Differences: VDD_NPU_VEPU

- RV1126

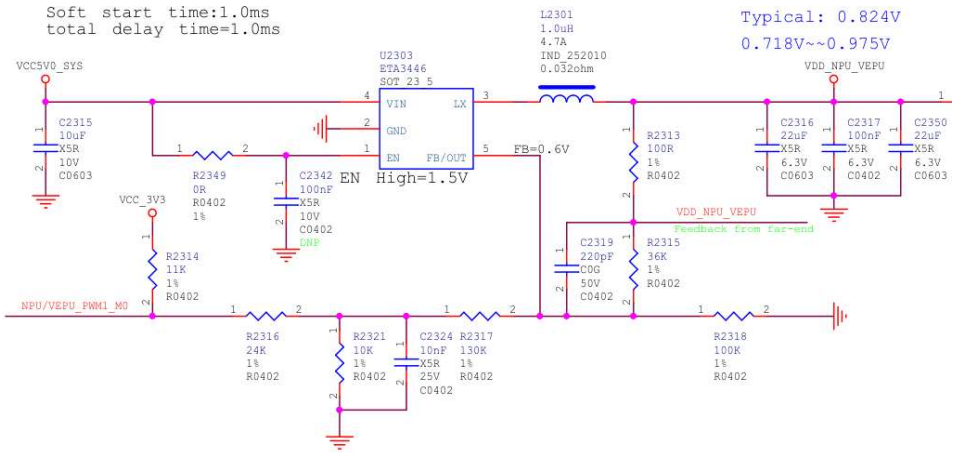

- RV1126B-P

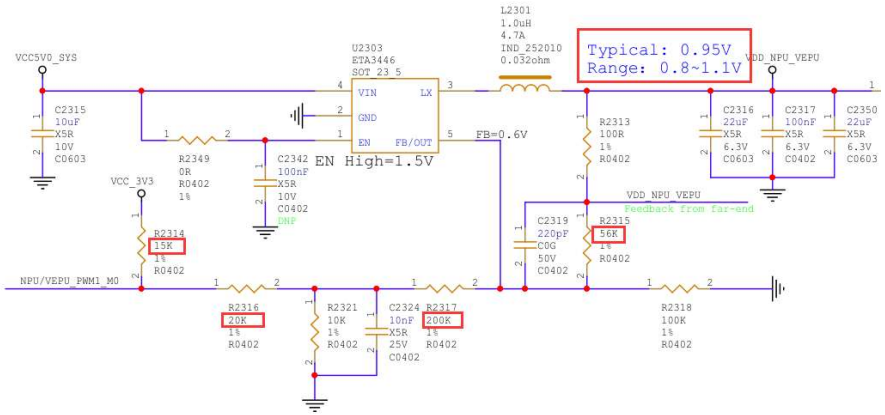

Pin to Pin 封装硬件BOM差异： VDD_NPU_VEPU_LOGIC
Pin to Pin Packaging Hardware BOM Differences: VDD_NPU_VEPU_LOGIC

- RV1126

VDD_LOGIC/NPU/VEPU

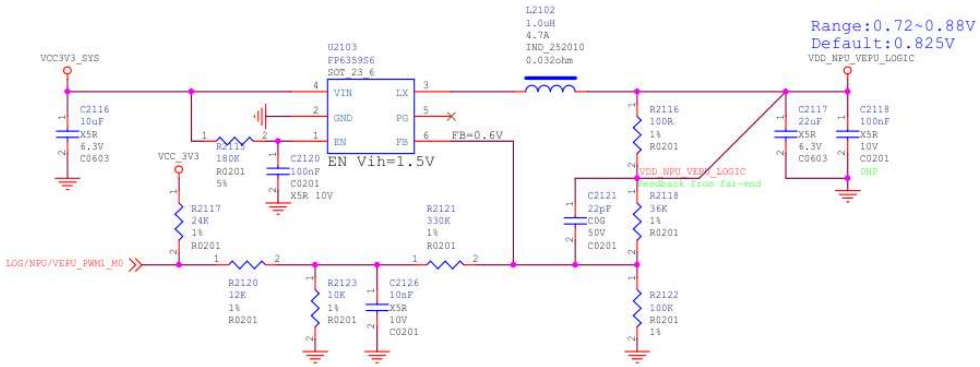

- RV1126B-P

VDD_LOGIC/NPU/VEPU

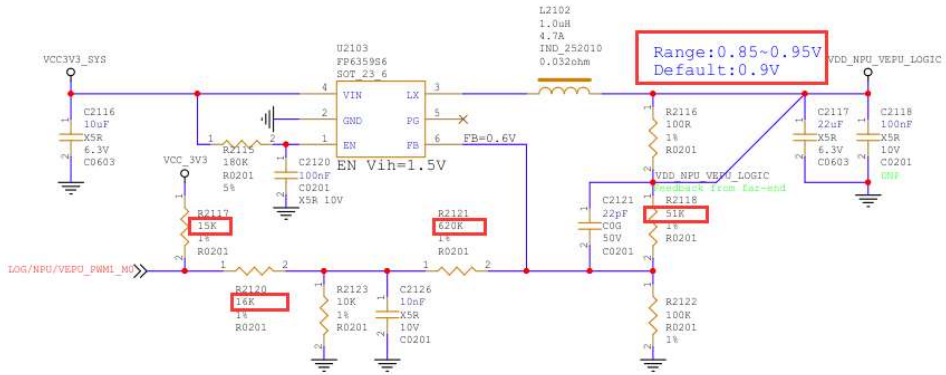

Pin to Pin 封装硬件BOM差异：DDR RZQ电阻
Pin to Pin Packaging Hardware BOM Differences: DDR RZQ Resistor

- RV1126

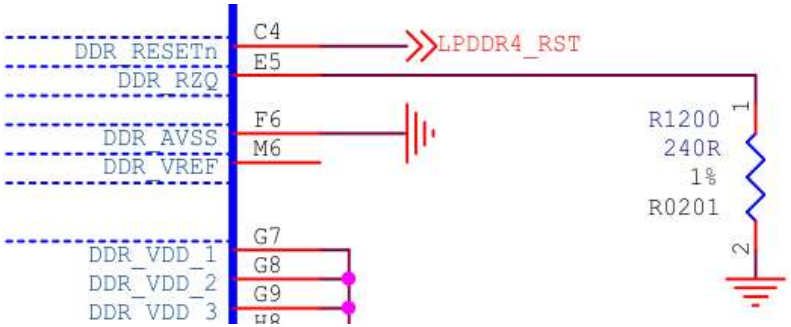

- RV1126B-P

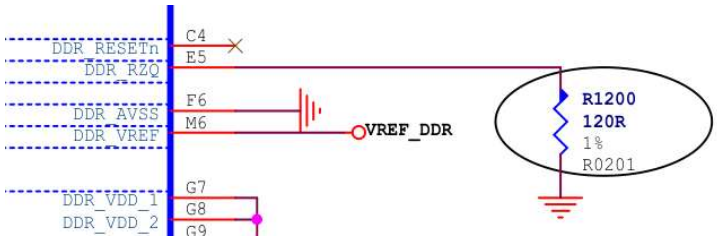

Pin to Pin 封装硬件BOM差异： USB DM上拉电路
Pin to Pin Packaging Hardware BOM Differences: USB DM pull-up Circuit

- RV1126

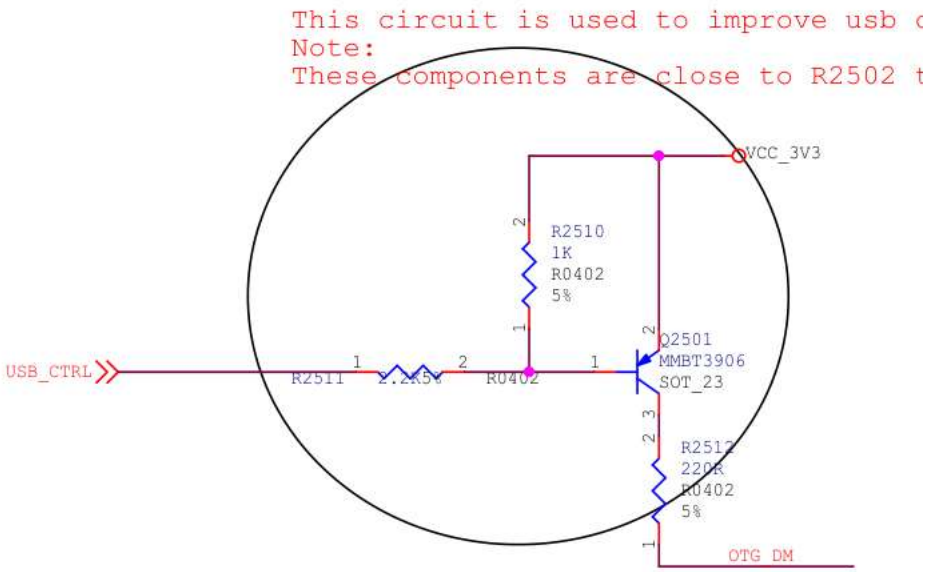

- RV1126B-P

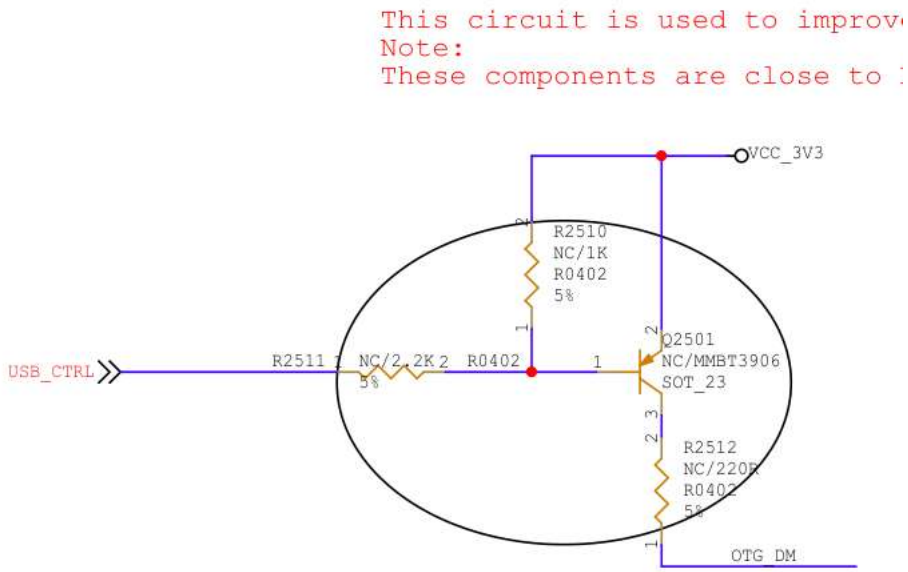

Pin to Pin 封装硬件BOM差异： USB VBUS分压
Pin to Pin Packaging Hardware BOM Differences: USB VBUS Voltage Division

- RV1126

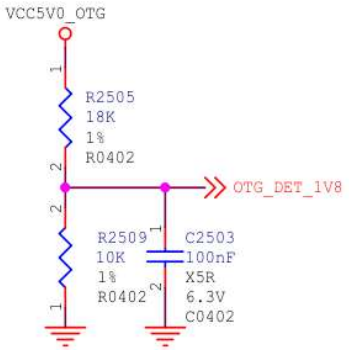

- RV1126B-P

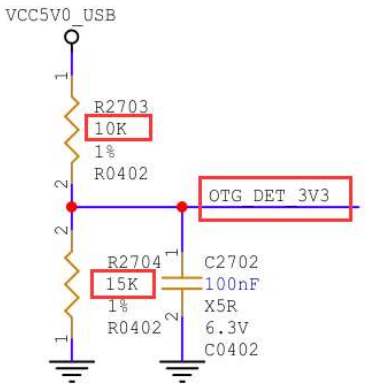

Pin to Pin 封装硬件BOM差异：RESET电路（分立电源）

Pin to Pin Packaging Hardware BOM Differences: RESET Circuit (Discrete Power)

- RV1126

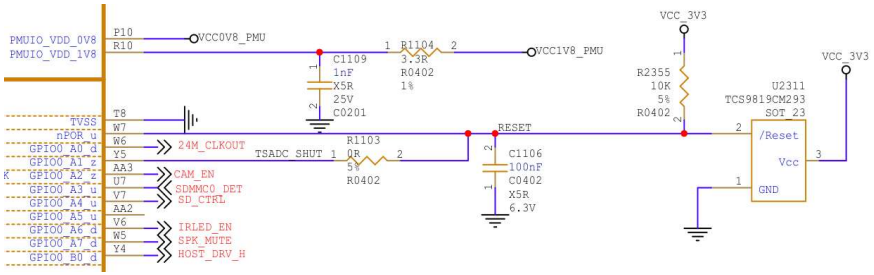

- RV1126B-P

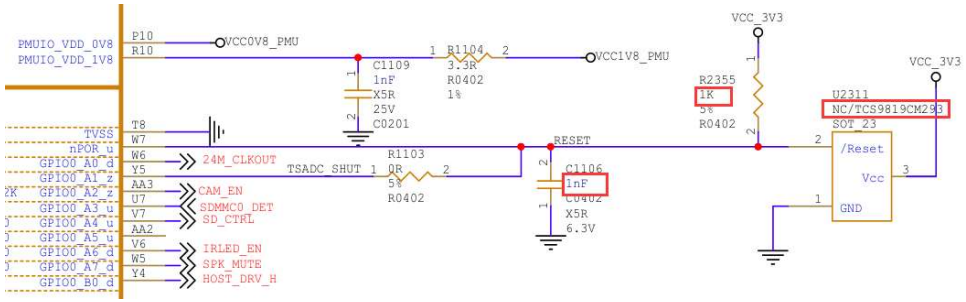

Pin to Pin 封装硬件BOM差异：RESET电路（PMIC电源）

Pin to Pin Packaging Hardware BOM Differences: RESET Circuit (PMIC Power Supply)

- RV1126

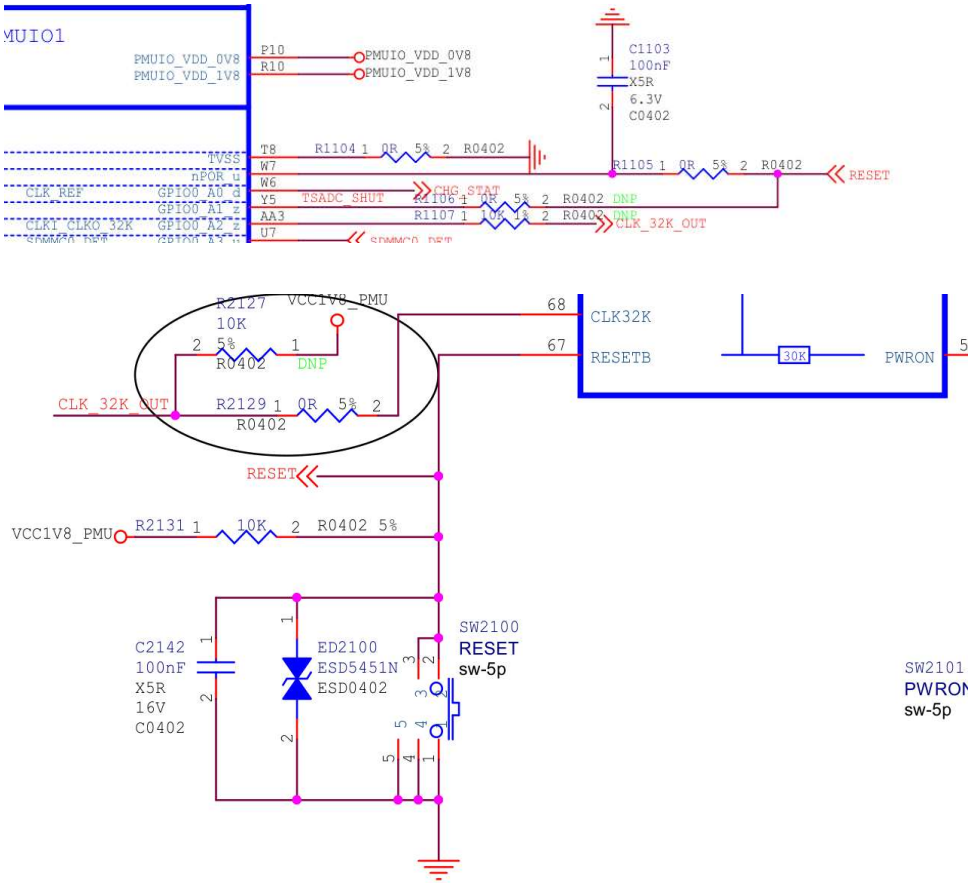
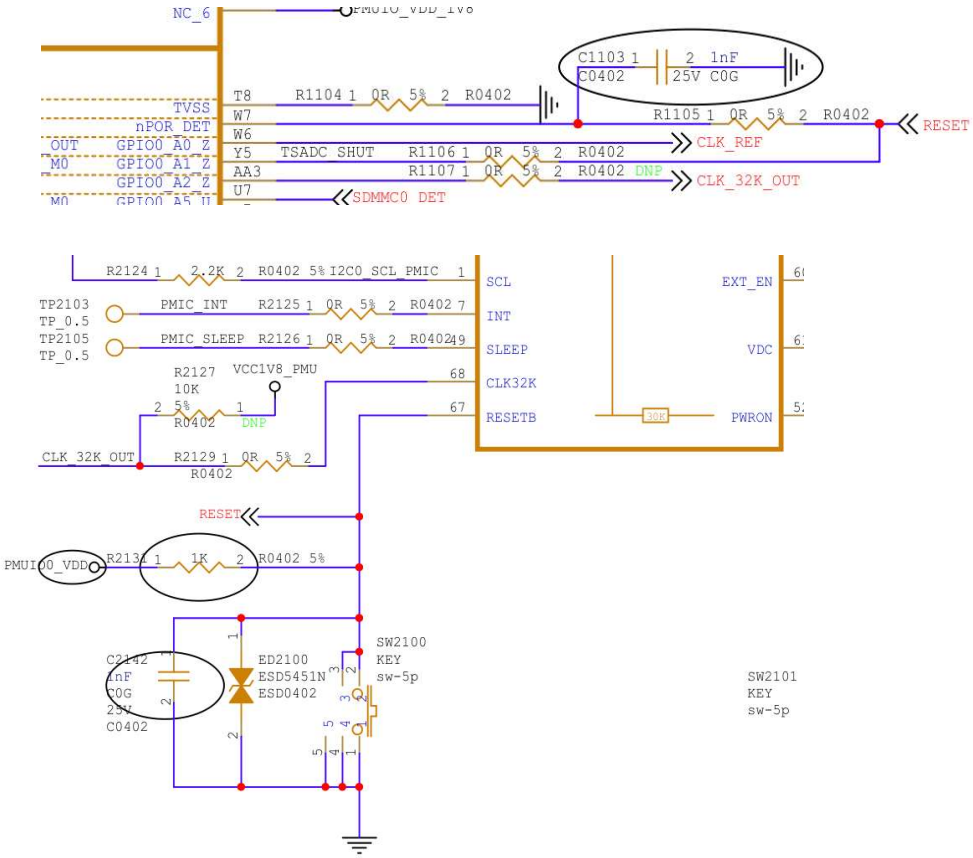
- RV1126B-P