OGC® DOCUMENT: 25-023

External identifier of this OGC® document: http://www.opengis.net/doc/{doc-type}/{standard}/{m.n}

Open Geospatial Consortium

INTRODUCTION TO OGC EMISSIONML: WHY THE WORLD NEEDS A STANDARD ONTOLOGY FOR EMISSIONS

DISCUSSION PAPER

DRAFT

Version: 1.0
Submission Date: 2025-xx-xx
Approval Date: 2025-xx-xx
Publication Date: 2025-xx-xx
Editor: Steve Liang, Ryan Ahola

Notice: This document is not an OGC Standard. This document is an OGC Discussion Paper and is therefore not an official position of the OGC membership. It is distributed for review and comment. It is subject to change without notice and may not be referred to as an OGC Standard. Further, an OGC Discussion Paper should not be referenced as required or mandatory technology in procurements.

License Agreement

Use of this document is subject to the license agreement at https://www.ogc.org/license

Copyright notice

Copyright © 2025 Open Geospatial Consortium
To obtain additional rights of use, visithttps://www.ogc.org/legal

Note

Attention is drawn to the possibility that some of the elements of this document may be the subject of patent rights. The Open Geospatial Consortium shall not be held responsible for identifying any or all such patent rights.

Recipients of this document are requested to submit, with their comments, notification of any relevant patent claims or other intellectual property rights of which they may be aware that might be infringed by any implementation of the standard set forth in this document, and to provide supporting documentation.

CONTENTS

I. ABSTRACT v

II. KEYWORDS v

III. PREFACE vi

IV. SECURITY CONSIDERATIONS vii

V. SUBMITTING ORGANIZATIONS viii

VI. SUBMITTERS viii

VII. CONTRIBUTORS viii

1. SCOPE 2

2. NORMATIVE REFERENCES 4

3. TERMS AND DEFINITIONS 6

4. THE PROBLEM: LACKING CONSISTENT ONTOLOGY AND FRAGMENTATION IN EMISSIONS DATA 9

5. WHAT EMISSIONML IS — AND WHAT IT'S NOT 12
   - 5.1. What EmissionML Is 12
   - 5.2. What EmissionML Is Not 13

6. USE CASES: REAL-WORLD EMISSIONML APPLICATIONS 16
   - 6.1. EmissionML Use Cases 16
   - 6.2. What the world looks like with EmissionML 17

7. ADOPTION PATHWAYS & CALL TO ACTION 19

LIST OF TABLES

Table 1 — EmissionML use case table 16

LIST OF FIGURES

Figure 1 — Visualization of “write many times” chaos: without EmissionML, every output requires bespoke integrations, creating silos, inefficiencies, and information loss — the high cost of fragmentation. 9

Figure 2 — Illustration of EmissionML in the emissions data value chain, demonstrating the principle of “write once, use many times” for interoperability and reuse. 13

I ABSTRACT

Recent advances in sensing, communications, cloud computing, and AI now make it possible to measure, monitor, report, and verify emissions at unprecedented scale. Satellites, aircraft, continuous monitors, and field instruments provide rich data streams, yet the value of these innovations is limited by fragmentation. Inconsistent vocabularies, incompatible reporting formats, and costly bespoke integrations create duplication, delay, and uncertainty.

This Discussion Paper highlights the interoperability challenge and outlines how a shared modeling approach can address it. With common ontologies and data models, emissions data can flow seamlessly across technologies and jurisdictions. Regulators can automate audits, operators can cut reporting costs and accelerate detection-to-repair, vendors can deliver plug-and-play solutions, and investors can gain confidence in transparent, comparable disclosures.

While focused on emissions, the principles extend across ESG domains such as wastewater management, carbon capture and storage, and nitrogen-use efficiency.

II KEYWORDS

The following are keywords to be used by search engines and document catalogues.

ogcdoc, OGC document, emissions, climate change

PREFACE

This Discussion Paper addresses the urgent need for interoperability in emissions data by examining how a shared modeling approach can reduce fragmentation and build trust across regulatory, voluntary, and market-driven frameworks. The paper does not attempt to describe the full technical content of EmissionML — that material is available on the EmissionML GitHub — but instead frames the problem of inconsistent vocabularies and incompatible reporting templates, illustrates the benefits of a common foundation through real-world use cases, and identifies adoption pathways for diverse stakeholders.

The purpose of this document is to engage the broader community of regulators, operators, technology providers, researchers, and investors in a discussion on the feasibility and value of harmonizing emissions data. Like many successful OGC efforts, the goal is not to prescribe specific technologies, but to provide a neutral, extensible foundation that enables interoperability across existing and emerging systems.

This work builds on the history of OGC standards, including the Sensor Web Enablement suite, the OGC/ISO Observations and Measurements (O&M) model, and the SOSA/SSN ontology developed in collaboration with W3C. These efforts demonstrated the power of shared information models for environmental and geospatial data. EmissionML extends this lineage by applying the same principles to emissions information, leveraging lessons from geospatial interoperability to address urgent climate and ESG challenges.

Future work will include refinement of the EmissionML conceptual model through open-source software implementations, closer alignment with related OGC and ISO standards, and exploration of applicability beyond emissions to other ESG domains such as wastewater, carbon capture and storage, and nitrogen-use efficiency. Community feedback on this Discussion Paper will guide next steps toward a candidate OGC standard and potential joint standardization with ISO.

IV SECURITY CONSIDERATIONS

No security considerations have been made for this Standard.

V SUBMITTING ORGANIZATIONS

The following organizations submitted this Document to the Open Geospatial Consortium (OGC):

- SensorUp Inc.
- Natural Resources Canada
- University of Calgary

VI SUBMITTERS

All questions regarding this submission should be directed to the editor or the submitters:

Name	Affiliation	OGC member
Steve Liang	SensorUp Inc.	Yes
Ryan Ahola	Natural Resources Canada	Yes
Sara Saeedi	University of Calgary	Yes

VII CONTRIBUTORS

Additional contributors to this Standard include the following:

- Josh Anhalt, Mbrace Energy
- Zahra Ashena, SensorUp Inc.
- Julie Doan-Prevost, Alberta Energy Regulator
- Sina Kiaei, University of Calgary
- Erin Li, University of Calgary
- Kan Luo, University of Calgary

- Jinya Wang, University of Calgary
- Zachary Weller, GTI Energy

1

SCOPE

1 SCOPE

This Discussion Paper aims to highlight the pressing challenge of interoperability in emissions data. Today, regulators, operators, technology vendors, researchers, and investors all struggle with fragmented data models, inconsistent terminology, and incompatible reporting templates. Without a common foundation, emissions data is costly to integrate, difficult to audit, and slow to translate into meaningful action. These barriers increase compliance costs, reduce transparency, and limit the effectiveness of emissions reduction efforts.

At the same time, the benefits of interoperability are clear. With a shared modeling approach, emissions data can flow seamlessly across technologies, organizations, and jurisdictions. Regulators can automate verification, operators can reduce reporting overhead, vendors can deliver plug-and-play solutions, and investors can gain confidence in transparent, comparable disclosures. The development of this paper was led by the OGC EmissionML Standards Working Group, with support from Natural Resources Canada and Emissions Reduction Alberta. While the immediate focus is emissions, the principles extend across ESG domains where observations and events must be consistently represented — including wastewater, carbon capture and storage, nitrogen-use efficiency, and more.

2

NORMATIVE REFERENCES

2 NORMATIVE REFERENCES

The following documents are referred to in the text in such a way that some or all of their content constitutes requirements of this document. For dated references, only the edition cited applies. For undated references, the latest edition of the referenced document (including any amendments) applies.

ISO: ISO 19101-1:2014, *Geographic information — Reference model — Part 1: Fundamentals*. International Organization for Standardization, Geneva (2014). https://www.iso.org/standard/59164.html.

ISO: ISO 19156:2023, *Geographic information — Observations, measurements and samples*. International Organization for Standardization, Geneva (2023). https://www.iso.org/standard/82463.html.

3

TERMS AND DEFINITIONS

3 TERMS AND DEFINITIONS

This document uses the terms defined in OGC Policy Directive 49, which is based on the ISO/IEC Directives, Part 2, Rules for the structure and drafting of International Standards. In particular, the word "shall" (not "must") is the verb form used to indicate a requirement to be strictly followed to conform to this document and OGC documents do not use the equivalent phrases in the ISO/IEC Directives, Part 2.

This document also uses terms defined in the OGC Standard for Modular specifications (OGC 08-131r3), also known as the 'ModSpec'. The definitions of terms such as standard, specification, requirement, and conformance test are provided in the ModSpec.

For the purposes of this document, the following additional terms and definitions apply.

3.1. Emission Event

An Emission Event is an occurrent representing the release of a substance into the atmosphere over a non-zero duration. It is characterized by its start time and end time, the Source Feature from which the substance originated, and the identity and quantity of the emitted substance.

3.2. Feature

Abstraction of real world phenomena (Source: ISO 19101-1:2014)

[**SOURCE:** ISO 19101-1:2014]

3.3. Measurement

Set of operations having the object of determining the value of a quantity (Source: ISO/OGC 19156:2023)

3.4. Observation

Act carried out by an observer to determine the value of an observable property of an object (feature-of-interest) by using a procedure, with the value provided as the result (Source: ISO/OGC 19156:2023)

3.5. Source Feature

A Source Feature is an ISO 19101 feature whose geometry provides the geospatial reference for one or more Emission Events. A Source Feature is characterised solely by its own identity, geometry, intended function, and lifecycle; it is explicitly agnostic to the Mechanism by which any associated Emission Event occur.

4

THE PROBLEM: LACKING CONSISTENT ONTOLOGY AND FRAGMENTATION IN EMISSIONS DATA

4 THE PROBLEM: LACKING CONSISTENT ONTOLOGY AND FRAGMENTATION IN EMISSIONS DATA

The advancement of sensing technologies, digital communications, cloud computing, and artificial intelligence now enables the measurement, monitoring, reporting, and verification (MMRV) of emissions at unprecedented scale and resolution. Satellites can quantify atmospheric pollutants from orbit, aircraft and drones provide high-resolution overflights, continuous monitoring systems deliver real-time data streams, and handheld instruments remain essential for targeted inspections. These innovations have raised expectations for transparency and rigor in emissions reporting across regulatory and voluntary programs. Yet the data ecosystem has not kept pace: without common models and standards, the value of these new technologies is often constrained by fragmentation, duplication, and costly integrations.

This fragmentation is evident across the entire emissions data lifecycle. Each technology vendor, operator, and reporting program tends to define its own vocabulary, formats, and assumptions. Data that should be straightforward to collect becomes difficult to integrate, trace, and compare. A remote sensing detection may not align with ground-level observations — for example, bottom-up inventories — when source features are described inconsistently. Regulators often require the same data to be restated in multiple incompatible templates. Operators face the added challenge of reconciling proprietary vendor outputs with internal enterprise systems, which further drives up cost and complexity. The consequence is predictable: high costs, duplicated effort, and delays in turning detection into actionable emissions reductions.

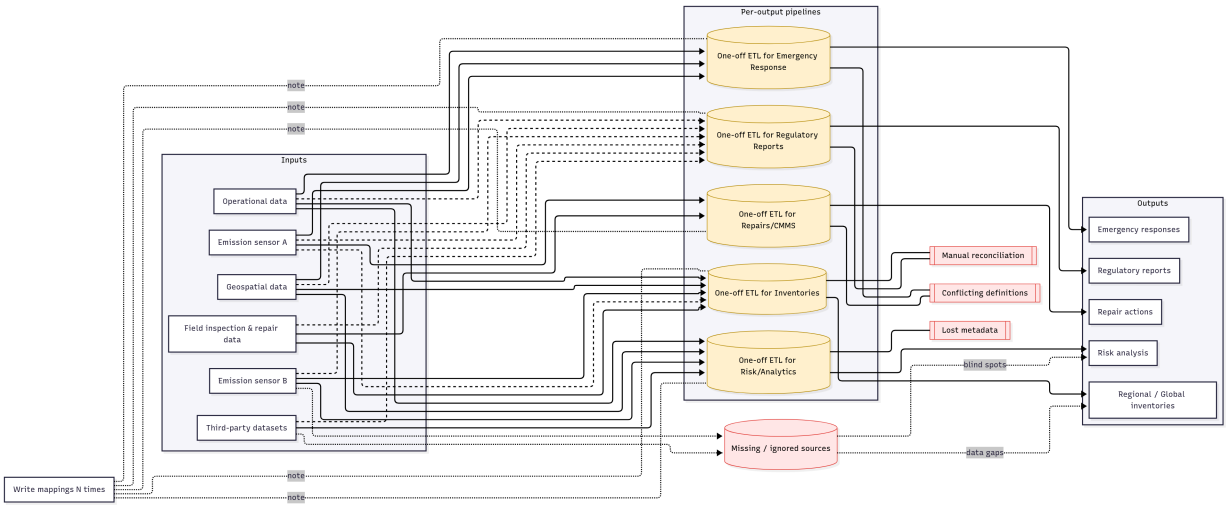

Figure 1 — Visualization of "write many times" chaos: without EmissionML, every output requires bespoke integrations, creating silos, inefficiencies, and information loss — the high cost of fragmentation.

Emissions data now stands at a similar crossroads to the early days of digital mapping. Then, geospatial information was locked in proprietary systems, requiring costly, one-off conversions with little assurance of interoperability. The introduction of open OGC standards for features

and web services changed everything: today billions of people use online maps on their phones, in vehicles, and across countless applications without ever thinking about the standards that make them work. The standards became invisible, yet indispensable. Emissions data needs the same foundation. Without a shared ontology and data model, stakeholders will continue to face high costs, fragmented workflows, and limited transparency. EmissionML provides that missing layer — a future-proof, standards-aligned ontology that addresses the root causes of fragmentation, ensures consistency and traceability, and unlocks a true "Web of Emissions Information" to support faster response, credible reporting, and more effective emissions reduction.

Summary — key challenges at a glance:

- High costs and duplicated effort from bespoke integrations across vendors and systems.
- Difficulties linking diverse measurements, such as remote sensing, ground in-situ observations, and inventories, due to inconsistent definitions.
- Incompatible reporting requirements across regulatory and voluntary programs, creating administrative burden and undermining comparability.

5

WHAT EMISSIONML IS — AND WHAT IT'S NOT

5 WHAT EMISSIONML IS — AND WHAT IT'S NOT

5.1. What EmissionML Is

If new sensing technologies are expanding what is technically measurable, EmissionML is about ensuring those sensor observations can be understood, trusted, and exchanged without friction and information loss. At its core, EmissionML is a shared ontology and data model for emission events and necessary relevant metadata in order to make the emission data useful. It provides a common language to describe sources, events, and observations, so that data collected by satellites, drones, continuous monitors, or facility reporting systems can be consistently interpreted and combined to estimate the duration, location, and magnitude of an emission event. In this way, EmissionML does not replace existing tools or dictate methods; instead, it enables them to work together, much as open geospatial standards allowed different mapping systems to interoperate seamlessly.

Specifically, EmissionML provides:

- A semantic foundation for interoperable reporting across multiple frameworks.
- A bridge between observations (sensor or estimate), source features (the equipment or site where emissions occur), and emission events (the occurrences themselves).
- A flexible modeling language that can serve as an intermediary data model, enabling a "write once, use many times" approach for outputs across multiple reporting frameworks.
- Data structures that are AI-ready, ensuring that automated reasoning and validation can be applied.
- Alignment with OGC, ISO, and W3C standards, including Observations and Measurements (ISO 19156:2023) and the SOSA/SSN ontology.

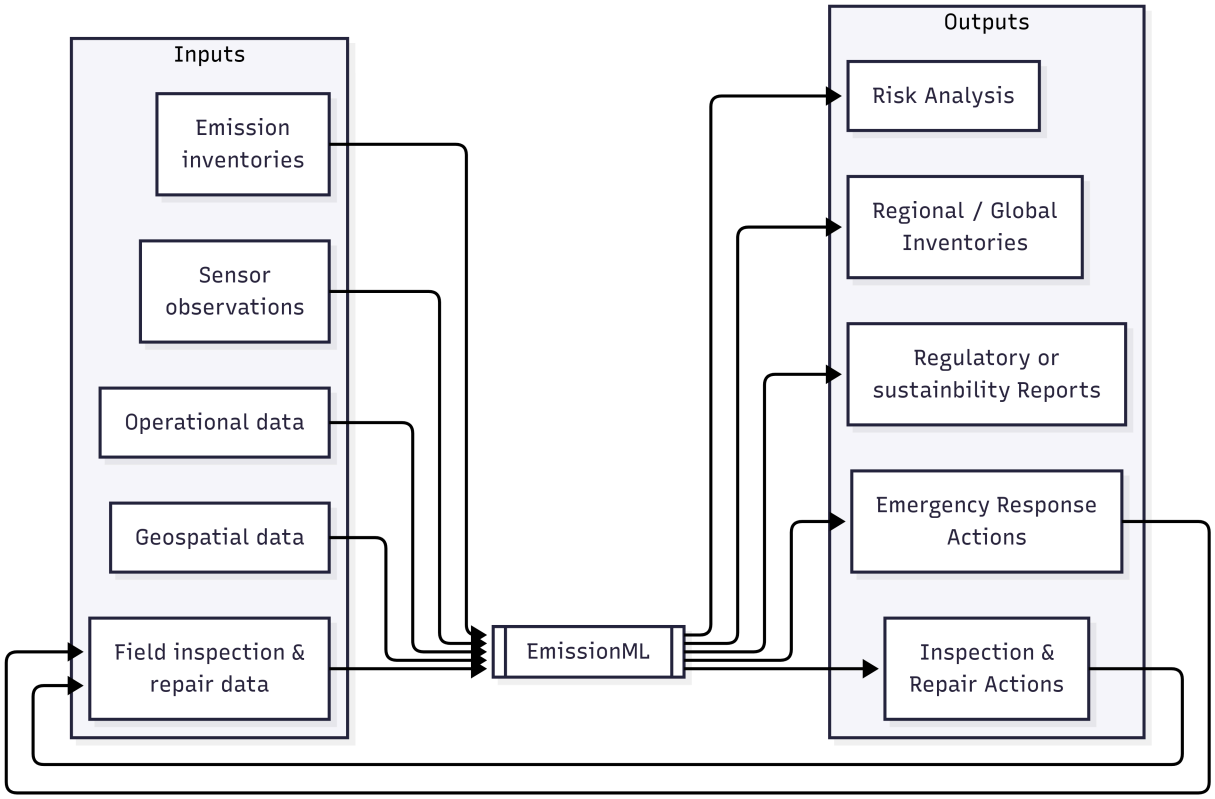

Figure 2 — Illustration of EmissionML in the emissions data value chain, demonstrating the principle of "write once, use many times" for interoperability and reuse.

5.2. What EmissionML Is Not

Equally important is clarifying what EmissionML does not attempt to be:

- It is not a methane MMRV protocol such as OGMP 2.0, Veritas, or MiQ. Instead, it can represent the data that those frameworks require.
- It is not a fixed reporting format like a CSV schema or PDF template. EmissionML underlies such formats but does not replace them.
- It is not an AI or ML model. While designed to be AI-ready, EmissionML itself is a data standard, not an algorithm.
- It is not a raw sensor data format. Vendors can continue to use proprietary payloads, but EmissionML provides the normalization layer.
- It is not a standalone software package. Instead, it is an ontology that can be implemented in software.

- It is not the only modeling language. EmissionML complements and builds upon SOSA, O&M, and related standards.

In short: EmissionML's strength lies in being a neutral, extensible foundation that enables diverse protocols, frameworks, and tools to interoperate seamlessly—today and as new innovations emerge.

6

USE CASES: REAL-WORLD EMISSIONML APPLICATIONS

6 USE CASES: REAL-WORLD EMISSIONML APPLICATIONS

6.1. EmissionML Use Cases

To illustrate EmissionML's potential, we present real-world applications where the lack of a common ontology creates friction today — and where a shared data model can deliver clear benefits for stakeholders, such as regulators, operators, vendors, researchers and investors.

Table 1 — EmissionML use case table

TITLE	STAKEHOLDI	PROBLEM	EMISSIONML SOLUTION	BENEFITS
Cross-Vendor Sensor Integration	Sensor Vendors, Operators	Proprietary payloads and inconsistent data models make it expensive and time-consuming to integrate multiple sensor systems.	EmissionML normalizes observation payloads and maps them to a consistent ontology.	Enables plug-and-play analytics, reduces integration costs, and avoids vendor lock-in.
Super-Emitter Event Validation	Remote Sensing Data Providers, Regulators	It is difficult to link a detected plume with a specific facility or activity due to inconsistent source feature definitions.	EmissionML links Observations to Source Features and Emission Events, creating an explainable and auditable validation chain.	Reduce response time and resulting emissions, increases confidence in attribution, and builds public trust.
Streamlined Regulatory and Voluntary Reporting	Operators, Regulators	Operators must reformat the same emissions data multiple times for different reporting frameworks (e.g., EPA, EU Methane Regulation, OGMP 2.0, MiQ, and others). Proprietary templates and vendor lock-in increase costs and errors.	EmissionML enables "emit once" data publication, which can then be automatically transformed into multiple reporting formats.	Reduces compliance cost and effort, ensures consistency across frameworks, and improves auditability.
Real-Time Operational Response	Operators, Control Rooms, Emergency Response Centres	Control rooms and emergency response centres often receive fragmented event feeds from multiple systems,	EmissionML provides a normalized event stream that can be shared and brokered across platforms.	Accelerates root-cause analysis, reduces downtime, and shortens detection-to-response cycles.

TITLE	STAKEHOLDI	PROBLEM	EMISSIONML SOLUTION	BENEFITS
		delaying diagnosis and coordinated action.		
Carbon-Market Quantification and Verification	Offset Project Developers, Auditors	Carbon credits depend on accurate quantification of avoided or reduced emissions, but calculations are often opaque.	EmissionML encodes emission quantities together with essential metadata, uncertainties and provenance.	Increases integrity of carbon credits, reduces verification cost, and improves market confidence.
Interoperable Emissions Simulation	Engineering Firms, Researchers	Simulation tools use incompatible models, limiting comparability and reuse.	EmissionML represents simulation inputs and outputs as standardized Emission Events.	Makes simulation results comparable and repeatable, enabling cross-study benchmarking.
Financial Risk and ESG Analysis	Banks, Investors, Insurers	ESG risk assessments are based on inconsistent, non-comparable emissions disclosures.	EmissionML structures emissions data for ingestion into financial risk models.	Improves risk-based lending and investment decisions, supports credible ESG scoring.

6.2. What the world looks like with EmissionML

Imagine a world where emissions data flows as seamlessly as financial information or digital maps. A plume detected by satellite is automatically linked to a site, verified against ground-based monitors, and cross-checked with operational data — all within minutes. Regulators receive reports in a consistent, auditable format without manual re-entry. Operators diagnose and repair leaks in hours instead of weeks. Investors and insurers compare emissions performance across companies with the same confidence they place in audited financial statements. Researchers build upon shared datasets instead of recreating them. In such a future, EmissionML is invisible but indispensable: the common foundation that makes emissions information trustworthy, interoperable, and actionable at global scale.

7

ADOPTION PATHWAYS & CALL TO ACTION

7 ADOPTION PATHWAYS & CALL TO ACTION

Turning this vision into reality requires broad adoption. Just as OGC's open standards unlocked the geospatial web, EmissionML will only deliver its full value through collective action. No single actor can overcome emissions data fragmentation alone. Regulators, operators, technology vendors, researchers, and investors all have a vital role to play in building a shared, standards-based foundation. The pathways below outline concrete steps that each community can take to accelerate adoption and unlock the benefits of a seamless "Web of Emissions Information."

- **Regulators**: Reference EmissionML when designing reporting templates to cut oversight costs, automate audits, and reduce uncertainties over compliance — while helping build a globally consistent emissions reporting foundation.
- **Operators**: Adopt EmissionML internally to lower reporting costs, eliminate duplicate integrations, and shorten detection-to-repair cycles — ensuring every integration efforts not only become reusable but also strengthens the connected emissions ecosystem.
- **Software Vendors**: Implement EmissionML compatibility in platforms to future-proof your products, accelerate customer onboarding, and gain a competitive edge in ESG-driven markets — while enabling customers to be standard compliant and future proof.
- **Sensor Providers**: Map sensor payloads and uncertainties to EmissionML to make devices plug-and-play, reduce custom integration costs for customers, and expand market reach — contributing measurements that immediately integrate into the broader emissions data ecosystem.
- **Investors and ESG Analysts**: Request EmissionML-compliant data in due diligence to reduce the risk of incomplete data, increase confidence in ESG portfolios, and improve risk-adjusted returns — while promoting transparency and comparability across global markets.
- **Researchers and Academia**: Apply EmissionML in models and publications to increase visibility, boost citations, and ensure lasting impact — while making research outputs reusable across studies, accelerating collective progress toward emissions reduction.

Many OGC standards, from web mapping to the Sensor Web and the Internet of Things, have become foundational to our digital world. By building EmissionML on this proven technical and reputational foundation, we're creating a standard that is not only robust and extensible but also poised for similar global adoption. To further this goal and provide the highest level of assurance, we plan to follow the path of many successful OGC standards by pursuing joint standardization with the International Organization for Standardization (ISO). This strategic step will ensure EmissionML meets the rigorous requirements for international endorsement, making it a credible and indispensable tool for regulatory, academic, and commercial applications worldwide.

How to Get Involved:

- Explore the OGC EmissionML GitHub.

- Contribute use cases, implementations, or vocabulary feedback.
- Join the OGC EmissionML Standards Working Group and shape the future of emissions interoperability.
- Develop open-source reference implementations and tutorials to facilitate adoption and community contribution

BIBLIOGRAPHY

BIBLIOGRAPHY

[1] ISO/OGC: Geographic information — Reference model — Part 1: Fundamentals. ISO 19101-1:2014. International Organization for Standardization, Geneva, Switzerland; and Open Geospatial Consortium, Wayland, MA, USA (2014)

[2] ISO/OGC: Geographic information — Observations, measurements and samples. ISO 19156:2023. International Organization for Standardization, Geneva, Switzerland; and Open Geospatial Consortium, Wayland, MA, USA (2023)

[3] Liang, S.: What EmissionML Is Not, https://www.sensorup.com/blog-details/what-emissionml-is-not/ (accessed 2025-08-28)