The Journal of Open Source Software

ggpedigree: Visualizing Pedigrees with 'ggplot2' and 'plotly'

S. Mason Garrison [1¶]

1 Department of Psychology, Wake Forest University, North Carolina, USA ¶ Corresponding author

DOI: 10.xxxxxx/draft

Software

- Review
- Repository
- Archive

Editor: Charlotte Soneson

Submitted: 08 July 2025
Published: unpublished

License
Authors of papers retain copyright and release the work under a Creative Commons Attribution 4.0 International License (CC BY 4.0).

DRAFT

Summary

Pedigree diagrams underpin research and practice across genetics, animal breeding, genealogy, forensics, and counseling. They help medical geneticists trace the inheritance of Mendelian diseases and identify at-risk relatives; enable dairy breeders to plan matings that improve milk yield; support genealogists in reconstructing ancestry; assist forensic scientists in establishing familial connections in criminal investigations; and facilitate family therapists and counselors in understanding their clients' relationships (McGoldrick, Gerson, & Petry, 2020). Early R tools such as kinship2 (Sinnwell, Therneau, & Schaid, 2014) plot simple nuclear families effectively, but they do not scale to today's pedigrees that can exceed 1,000s of individuals. As datasets have grown, researchers now work with increasingly complex family structures, including large-scale plant breeding pedigrees (Shaw, Graham, Kennedy, Milne, & Marshall, 2014), web-based pedigree management systems (Ranaweera, Makalic, Hopper, & Bickerstaffe, 2018), interactive pedigree editors (Carver et al., 2018), and behavior genetic studies of extended family structures (Garrison et al., 2023; Hunter, Garrison, Burt, & Rodgers, 2021). That complexity exposes the limitations of existing tools, which often struggle with large and complex datasets. `ggpedigree` addresses this need by combining a vectorised layout algorithm, ggplot2 output, and optional plotly interactivity.

Statement of need

Pedigree visualization has traditionally relied on proprietary software (e.g., Progeny, GenoPro, Pedigree Viewer) or R packages like `kinship2` (Sinnwell et al., 2014), pedtools (Vigeland, 2021a), or `pedtricks` (J. Martin, Wolak, Johnston, & Morrissey, 2025). While these tools are functional for many use cases, their limitations become pronounced when working with complex, modern pedigree datasets or when more detailed customization is required. Most R packages focus on base graphics or simple `ggplot2` implementations.

Existing R solutions face three main challenges. First, current solutions are often poorly integrated with tidyverse workflows and do not expose the full theming and layering capabilities familiar to `ggplot2` users (Wickham, 2016). In animal-focused workflows, rapid rendering seems to takes precedence over aesthetic flexibility. I suspect that this is because users tend to work with more uniform data and fewer phenotypes. By contrast, human-focused workflows—particularly in behavior genetics and genetic epidemiology (Garrison et al., 2023; Lyu et al., 2025; McArdle & McDonald, 1984)—require closer integration with tidyverse pipelines and more flexible plotting systems to accommodate complex pedigree structures and harmonization of phenotypes across data sources. In other words, the needs are different.

Second, most R-based tools offer no interactivity. Static graphics are often sufficient for publication, but interactivity improves exploration and communication during model development or data cleaning. A notable exception is `pedtools` (Vigeland, 2021b), which offers a sister shiny

app, QuickPed (Vigeland, 2022). While the R ecosystem includes libraries, like plotly, that support interactive plotting, these features have yet to be integrated into pedigree functions.

Third, scalability and extensibility remain limited across existing tools. Several R packages attempt to address these challenges with built-in pedigree plotting functions. kinship2 (Sinnwell et al., 2014) remains widely used but produces static base graphics and relies on non-vectorized recursive layout functions that do not scale well to large families. A partial ggplot2 implementation exists in a modernized kinship2 (called Pedixplorer, Le Nézet, Sinnwell, Letko, André, & Quignon, 2025), but is non-vectorized and incompatible with other ggplot2 layers. pedtricks, a revival of pedantics (Morrissey & Wilson, 2010), provides a ggplot2-based implementation for large animal pedigrees but lacks extensibility and interactivity. The geneHapR (Zhang, Jia, & Diao, 2023) package focuses on haplotype visualization rather than general pedigree structure. The pedgene package (Schaid & Sinnwell, 2024) offers some plotting functions but is primarily designed for association testing. The pedigreejs package (Carver et al., 2018) provides an interactive pedigree editor but does not integrate with R or ggplot2, limiting its utility for R users.

None of these packages offers the combination of modern ggplot2 integration, interactive capabilities, and extensibility that ggpedigree provides. ggpedigree addresses these limitations by providing a comprehensive visualization framework built on modern R graphics infrastructure. It leverages the extensive customization capabilities of ggplot2 while adding specialized functionality for pedigree-specific visualization challenges.

Software Architecture

ggpedigree is built on a modular architecture that separates data processing, layout calculation, and visualization layers. The core workflow involves: (1) data standardization and family structure analysis using BGmisc functions, (2) coordinate calculation using algorithms adapted from kinship2, (3) relationship connection mapping, and (4) layer-based plot construction using ggplot2 geometry functions. This design allows users to customize any aspect of the visualization while maintaining computational efficiency for large pedigrees. The package integrates tightly with the broader R ecosystem, particularly the tidyverse (Wickham et al., 2019) and BGmisc (Garrison, S. M., Hunter, Michael D., Lyu, X., Trattner, J. D., & Burt, S. A., 2024). All functions return standard R objects (ggplot or plotly) that can be further customized.

Features

I describe the main features of the ggpedigree package below. More detailed descriptions of features and usage are available in the package vignettes, including examples of how to create static and interactive pedigree plots, customize aesthetics, and visualize relatedness matrices. Additional example data include squirrel data from the Kluane Red Squirrel Project (McFarlane et al., 2014, 2015) and Targaryen family data from the Song of Ice and Fire universe (G. R. R. Martin, 1997, 2018).

- Data Standardization and Family Structure Analysis: ggPedigree() integrates with BGmisc functions like ped2fam() to organize individuals by family, recodeSex() to standardize sex coding, and checkParentIDs() to validate pedigree structures. The function handles consanguineous relationships and individuals appearing in multiple pedigree positions.
- Coordinate Calculation: calculateCoordinates() computes optimal positioning for individuals using algorithms adapted from kinship2::align.pedigree, with enhancements for large multi-generational pedigrees and complex family structures. These steps are vectorized as much as possible to ensure computational efficiency and compatibility with ggplot2.

DRAFT

- Relationship Connection Mapping: `calculateConnections()` generates connection paths between family members, mapping parent-child, sibling, spousal, and twin relationships. The function determines midpoints for line intersections and handles overlapping connections with specialized curved segments. These calculations are optimized for large datasets by using vectorized operations rather than the loop-based approaches used in kinship2.
- Layer-based Plot Construction: `ggPedigree()` constructs plots using ggplot2 geometry functions, returning standard ggplot2 objects that integrate with existing R workflows. `ggPedigreeInteractive()` extends plots into interactive plotly widgets. A config system allows customization of over 100 aesthetic and layout parameters.
- Individual Highlighting: Advanced functionality to highlight specific individuals and their relatives based on additive genetic, mitochondrial, or other relationship matrices.
- Specific Visualization Functions: `ggPedigree()` creates static pedigree plots using ggplot2. `ggPedigreeInteractive()` generates interactive pedigree plots using plotly. `ggRelatednessMatrix()` creates customizable heatmaps for relatedness matrices with support for hierarchical clustering, and seamless integration with `BGmisc` relatedness calculations. `ggPhenotypeByDegree()` visualizes phenotypic correlations as a function of genetic relatedness, including confidence intervals and statistical summaries for quantitative genetic analysis.

Code example

This example shows how to use `ggpedigree` to visualize a pedigree. The `potter` dataset includes several wizarding families from the Harry Potter series.

```
ggPedigree(potter,
  famID = "famID",
  personID = "personID"
)
```

This code produces the following pedigree plot:

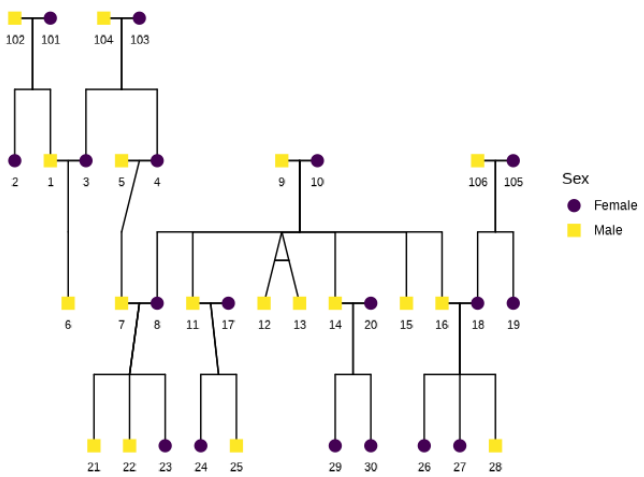

The package supports extensive customization of visual aesthetics. The following example is a figure from Hunter et al. (2025) that used the Potter pedigree data. The figure has been restyled according to Wake Forest University brand identity guidelines to demonstrate ggpedigree's customization capabilities. The figure combines two panels: panel (a) highlights

unique mitochondrial lines in the Dursley and Evans families, while panel (b) shows the full pedigree with Molly Weasley's mitochondrial descendants in gold.

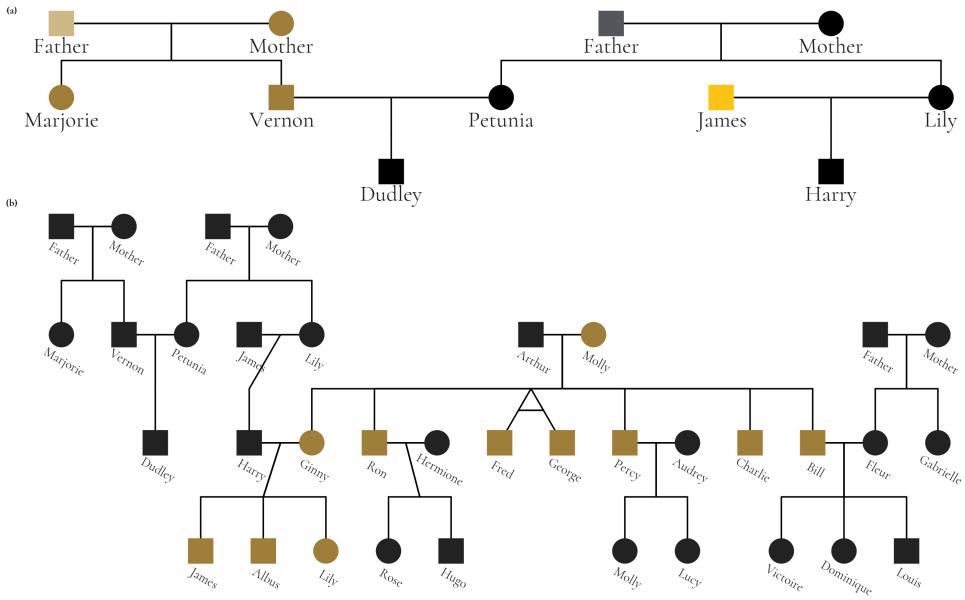

The complete source code for this example is available in the package documentation at https://r-computing-lab.github.io/ggpedigree/articles/v01_plots_extended.html.

Collectively, these tools provide a valuable resource for behavior geneticists and others who work with extended family data. They were developed as part of a grant and have been used in several ongoing projects, presentations (Garrison, 2024; Hunter, Garrison, Lyu, Good, & Burt, 2024), and forthcoming papers (Burt et al., 2025; Hunter et al., 2025; Lyu et al., 2025).

Availability

The `ggpedigree` package is open-source and available on both GitHub at https://github.com/R-Computing-Lab/ggpedigree and the Comprehensive R Archive Network (CRAN) at https://cran.r-project.org/package=ggpedigree. It is licensed under the GNU General Public License.

Acknowledgments

The current research is supported by the National Institute on Aging (NIA), RF1-AG073189. The author would like to thank Michael Hunter for his enthusiasm for the development of this package.

References

Burt, S. A., Garrison, S. M., Lyu, X., Rodgers, J. L., Carroll, S. L., Smith, K. R., & Hunter, M. D. (2025). Contributions of inherited mtDNA to longevity: Evidence from extended pedigrees with 176 million kinship pairs. *eBioMedicine*, *119*, 105911. doi:https://doi.org/10.1016/j.ebiom.2025.105911

Carver, T., Cunningham, A. P., Babb de Villiers, C., Lee, A., Hartley, S., Tischkowitz, M., Walter, F. M., et al. (2018). Pedigreejs: A web-based graphical pedigree editor. *Bioinformatics*, *34*(6), 1069–1071. doi:10.1093/bioinformatics/btx705

Garrison, S. M. (2024). Charting new paths in behavior genetics: Developing a comprehensive r visualization atlas. *Behavior Genetics* (Vol. 54, p. 488488). doi:10.1007/s10519-024-10197-8

Garrison, S. M., Hunter, Michael D., Lyu, X., Trattner, J. D., & Burt, S. A. (2024). BGmisc: An r package for extended behavior genetics analysis. *Journal of Open Source Software*, *9*(94). doi:10.21105/joss.06203

Garrison, S. M., Lyu, X., Hunter, M. D., Rodgers, J. L., Smith, K. R., Coon, H., & Burt, S. A. (2023). Analyzing extended cousin similarity to unravel the mystery of mtDNA and longevity. *Behavior Genetics*. doi:10.1007/s10519-023-10156-9

Hunter, M. D., Garrison, S. M., Burt, S. A., & Rodgers, J. L. (2021). The Analytic Identification of Variance Component Models Common to Behavior Genetics. *Behavior Genetics*, *51*(4), 425–437. doi:10.1007/s10519-021-10055-x

Hunter, M. D., Garrison, S. M., Lyu, X., Good, R., & Burt, S. A. (2024). Tools for biometric modeling in large population databases. *Behavior Genetics* (Vol. 54, p. 531531). doi:10.1007/s10519-024-10197-8

Hunter, M. D., Garrison, S. M., Lyu, X., Good, R., Carroll, S. L., & Burt, S. A. (2025). *Tracing the right path: Determination of large pedigree segmentation and relatedness*. *Revise and Resubmit at Behavior Genetics*.

Le Nézet, L., Sinnwell, J., Letko, A., André, C., & Quignon, P. (2025). Pedixplorer: A bioconductor package to streamline pedigree design and visualization. *Bioinformatics*, *41*(6), btaf329. doi:10.1093/bioinformatics/btaf329

Lyu, X., Hunter, M. D., Burt, S. A., Good, R., Carroll, S. L., & Garrison, S. M. (2025). Detecting mtDNA effects with an extended pedigree model: An analysis of statistical power and estimation bias. *Behavior Genetics*. doi:10.1007/s10519-025-10225-1

Martin, G. R. R. (1997). *A game of thrones* (Vol. 1). Bantam.

Martin, G. R. R. (2018). *Fire & blood: 300 years before a game of thrones*. New York: Random House Worlds.

Martin, J., Wolak, M., Johnston, S., & Morrissey, M. (2025). *Pedtricks: Visualize, summarize and simulate data from pedigrees*. doi:10.32614/CRAN.package.pedtricks

McArdle, J. J., & McDonald, R. P. (1984). Some algebraic properties of the reticular action model for moment structures. *British Journal of Mathematical and Statistical Psychology*, *37*, 234–251. doi:10.1111/j.2044-8317.1984.tb00802.x

McFarlane, S. E., Boutin, S., Humphries, M. M., McAdam, A. G., Gorrell, J. C., & Coltman, D. W. (2015, January 21). Data from: Very low levels of direct additive genetic variance in fitness and fitness components in a red squirrel population. Dryad. doi:10.5061/DRYAD.N5Q05

McFarlane, S. E., Gorrell, J. C., Coltman, D. W., Humphries, M. M., Boutin, S., & McAdam, A. G. (2014). Very low levels of direct additive genetic variance in fitness and fitness components in a red squirrel population. *Ecology and Evolution*, *4*(10), 1729–1738. doi:10.1002/ece3.982

McGoldrick, M., Gerson, R., & Petry, S. (2020). *Genograms: Assessment and Treatment*. Erscheinungsort nicht ermittelbar: W. W. Norton & Company.

Morrissey, M. B., & Wilson, A. J. (2010). pedantics: an r package for pedigree-based genetic simulation and pedigree manipulation, characterization and viewing. *Molecular Ecology Resources*, *10*(4), 711–719. doi:10.1111/j.1755-0998.2009.02817.x

Ranaweera, T., Makalic, E., Hopper, J. L., & Bickerstaffe, A. (2018). An open-source, integrated pedigree data management and visualization tool for genetic epidemiology.

DRAFT

International Journal of Epidemiology, *47*(4), 1034–1039. doi:10.1093/ije/dyy049

Schaid, D., & Sinnwell, J. (2024). Pedgene: Gene-level variant association tests for pedigree data. doi:10.32614/CRAN.package.pedgene

Shaw, P. D., Graham, M., Kennedy, J., Milne, I., & Marshall, D. F. (2014). Helium: Visualization of large scale plant pedigrees. *BMC Bioinformatics*, *15*(1), 259. doi:10.1186/1471-2105-15-259

Sinnwell, J. P., Therneau, T. M., & Schaid, D. J. (2014). The kinship2 r package for pedigree data. *Human Heredity*, *78*, 91–93. doi:10.1159/000363105

Vigeland, M. D. (2021b). *Pedigree analysis in r*. London: Academic Press, an imprint of Elsevier. Retrieved from https://shop.elsevier.com/books/pedigree-analysis-in-r/vigeland/978-0-12-824430-2

Vigeland, M. D. (2021a). *Pedigree analysis in {r}*. doi:10.32614/CRAN.package.pedtools

Vigeland, M. D. (2022). QuickPed: An online tool for drawing pedigrees and analysing relatedness. *BMC Bioinformatics*, *23*(1), 220. doi:10.1186/s12859-022-04759-y

Wickham, H. (2016). *ggplot2*. Use R! Cham: Springer International Publishing. doi:10.1007/978-3-319-24277-4

Wickham, H., Averick, M., Bryan, J., Chang, W., McGowan, L., François, R., Grolemund, G., et al. (2019). Welcome to the tidyverse. *Journal of Open Source Software*, *4*(43), 1686. doi:10.21105/joss.01686

Zhang, R., Jia, G., & Diao, X. (2023). geneHapR: An r package for gene haplotypic statistics and visualization. *BMC Bioinformatics*, *24*(1), 199. doi:10.1186/s12859-023-05318-9

DRAFT