Datasheet

SKU: OMV-N6-V1

Description

The OpenMV N6 is the latest generation of the OpenMV Cam product line, built around the STM32N657A0 ARM Cortex-M55 running at 800 MHz with a 600 GOPS neural processing unit (NPU). It delivers real-time YOLO object detection at 30+ FPS entirely on-device. With 64 MB RAM, 32 MB flash, a 5 MP HDR camera (default), integrated WiFi/BLE, Gigabit Ethernet, IMU, microphone, and GPU with H.264/JPEG video recording, it is the most capable OpenMV Cam ever built. Supports interchangeable camera modules including global shutter, FLIR thermal, and Prophesee event cameras. Programmable in MicroPython via the OpenMV IDE with Edge Impulse integration.

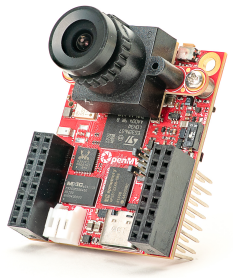

Target Areas

Edge AI, machine vision, object detection, thermal imaging, multispectral imaging, video streaming, industrial automation, robotics, security, smart agriculture.

Key Features

- **800 MHz Cortex-M55** — STM32N657A0 with Helium vector acceleration and 600 GOPS NPU. Real-time YOLO at 30+ FPS.
- **Massive memory** — 64 MB RAM (800 MB/s) and 32 MB flash (400 MB/s).
- **5 MP HDR camera** — Default 5 MP 30 FPS HDR sensor. Swappable with 1 MP global shutter (up to 480 FPS), FLIR thermal, or event camera.
- **GPU + video** — On-board GPU with H.264/JPEG video recording.
- **Gigabit Ethernet** — Built-in Gigabit Ethernet with differential pairs on header.
- **WiFi + BLE** — 2.4 GHz WiFi and Bluetooth Low Energy 5.2 integrated.
- **Rich I/O** — 18 GPIO pins with SPI, I2C, I3C, CAN, 2x UART, ADC, 4x PWM. USB-C High-Speed.
- **Ultra-low power** — Less than 50 µA deepsleep. 4+ year battery life possible.

Contents

1 Features and System Components
- 1.1 Microcontroller
- 1.2 Memory
- 1.3 Connectivity
- 1.4 Camera System
- 1.5 Sensors
- 1.6 User Interface
- 1.7 Power Management

2 Ratings
- 2.1 Recommended Operating Conditions

3 Connector Overview
- 3.1 Left Header — Inside (Top)
- 3.2 Left Header — Outside (Bottom)
- 3.3 Right Header — Inside (Top)
- 3.4 Right Header — Outside (Bottom)

4 Functional Overview
- 4.1 Board Topology
- 4.2 Power Tree

5 General Info

6 Certifications

7 Company Information

8 Reference Documentation

9 Revision History

1 Features and System Components

1.1 Microcontroller

Component	Details
STM32N657A0	ARM Cortex-M55 core running at 800 MHz with Helium/MVE vector acceleration and ARM Helium Accelerated CV Library. Integrated 600 GOPS neural processing unit (NPU) for on-device AI inference. On-board GPU with H.264/JPEG video encoding.

1.2 Memory

Component	Details
RAM	64 MB at 800 MB/s bandwidth.
Flash	32 MB at 400 MB/s bandwidth.
microSD Card	Supports SD (up to 2 GB), SDHC (up to 32 GB), SDXC (up to 2 TB). UHS-I interface.

1.3 Connectivity

Component	Details
USB-C	USB 2.0 High-Speed (480 Mbps).
Gigabit Ethernet	Gigabit Ethernet with differential pairs (TXP/TXN, RXP/RXN, DCP/DCN, DDP/DDN) exposed on left header.
WiFi	2.4 GHz WiFi.
Bluetooth	Bluetooth Low Energy 5.2.
SPI	SPI bus on P0 (MOSI) / P1 (MISO) / P2 (SCLK) / P3 (SS).
I2C	I2C bus on P4 (SCL) / P5 (SDA).
I3C	I3C bus supported.
CAN	CAN bus on P2 (CTX) / P3 (CRX).
UART	2 UART ports: P4 (TX) / P5 (RX) and P14 (TX) / P13 (RX).

1.4 Camera System

Component	Details
Default Sensor	5 MP 30 FPS HDR camera.
Alternative Sensors	1 MP 120/240/480 FPS color global shutter camera, FLIR Boson/Lepton thermal camera, Prophesee GENX320 event camera.
Lens	M12 (S-mount) interchangeable lens mount.

1.5 Sensors

Component	Details
IMU	On-board inertial measurement unit (accelerometer and gyroscope).
Microphone	On-board microphone for audio input.

1.6 User Interface

Component	Details
RGB LED	User-programmable RGB LED.
Buttons	Main button (SW) and wakeup button (SW2) for deepsleep wakeup.

1.7 Power Management

Component	Details
RAW	Always-on unregulated 3.6–5 V power input. Active in on, off, and deepsleep modes.
VIN	5 V regulated power input on right header.
3.3 V Rail	Regulated 3.3 V output, 1 A supply max.
LiPo Battery	3.7 V LiPo battery charger integrated.
Deepsleep	Less than 50 µA deepsleep current. Greater than 4 year battery life possible. PWR-WKUP pin for wakeup.

2 Ratings

2.1 Recommended Operating Conditions

Symbol	Description	Min	Typ	Max	Unit
VRAW	RAW supply voltage	3.6	—	5.0	V
VIN	VIN supply voltage	—	5.0	5.0	V
VIO	I/O voltage	—	3.3	3.3	V
IIO	Per-pin current (sink/source)	—	—	20	mA
IOUT	3.3 V rail max current	—	—	1000	mA
ISLEEP	Deepsleep current	—	—	50	µA
TOP	Operating temperature	-40	25	85	°C

3 Connector Overview

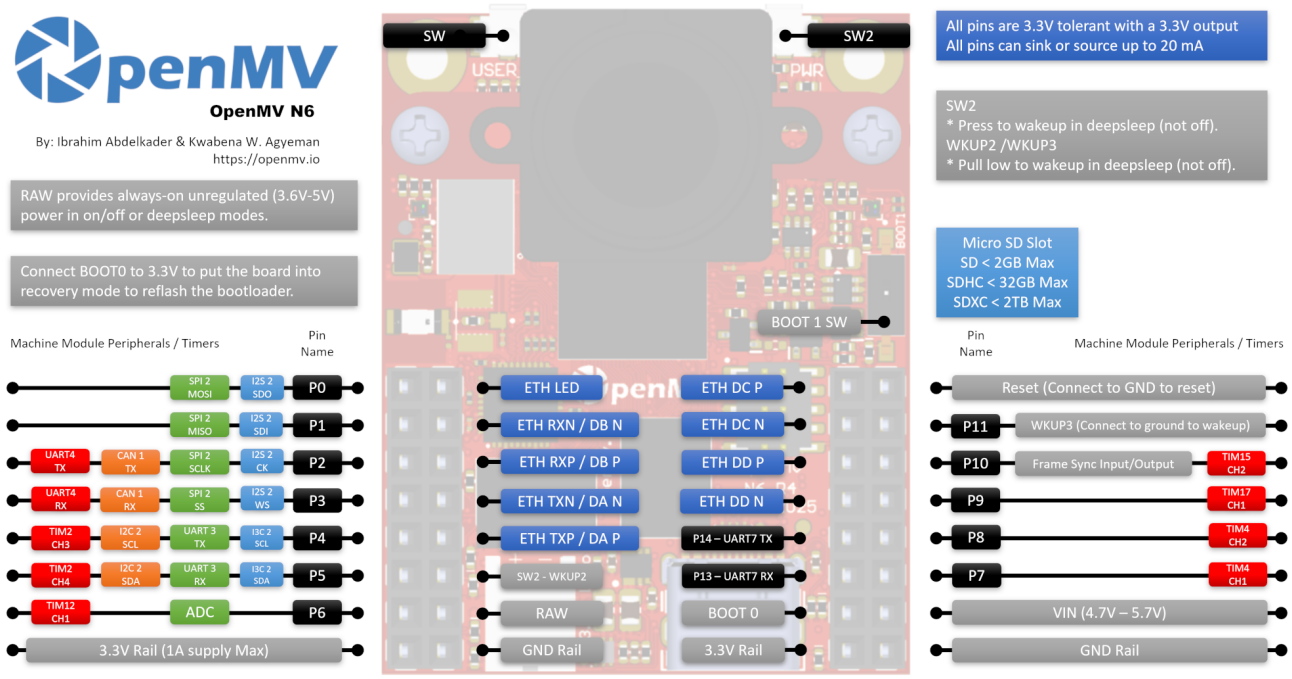

3.1 Left Header — Inside (Top)

Pin	Label	Type	Alternate Functions
1	P0	I/O	SPI MOSI
2	P1	I/O	SPI MISO
3	P2	I/O	SPI SCLK / CAN TX
4	P3	I/O	SPI SS / CAN RX
5	P4	I/O	UART TX / I2C SCL
6	P5	I/O	UART RX / I2C SDA
7	P6	I/O	ADC
8	3V3	Power	3.3 V regulated output (1 A max)

3.2 Left Header — Outside (Bottom)

Pin	Label	Type	Function
1	GND	Power	Ground
2	RAW	Power	Always-on 3.6–5 V (on/off/deepsleep)
3	PWR-WKUP	Input	Wakeup from deepsleep
4	ETH-TXP	Ethernet	Ethernet TX positive
5	ETH-TXN	Ethernet	Ethernet TX negative
6	ETH-RXP	Ethernet	Ethernet RX positive
7	ETH-RXN	Ethernet	Ethernet RX negative
8	ETH-LED	Output	Ethernet status LED

3.3 Right Header — Inside (Top)

Pin	Label	Type	Function
1	ETH-DCP	Ethernet	Ethernet DC pair positive
2	ETH-DCN	Ethernet	Ethernet DC pair negative
3	ETH-DDP	Ethernet	Ethernet DD pair positive
4	ETH-DDN	Ethernet	Ethernet DD pair negative
5	P14	I/O	UART TX (secondary)
6	P13	I/O	UART RX (secondary)
7	BOOT0	Input	3.3 V for recovery mode
8	3V3	Power	3.3 V regulated output

3.4 Right Header — Outside (Bottom)

Pin	Label	Type	Function
1	GND	Power	Ground
2	VIN	Power	5 V input
3	P7	I/O	PWM
4	P8	I/O	PWM
5	P9	I/O	PWM
6	P10	I/O	PWM
7	P11	I/O	WAKEUP (deepsleep wakeup, pull low)
8	RST	Input	Connect to GND to reset

4 Functional Overview

4.1 Board Topology

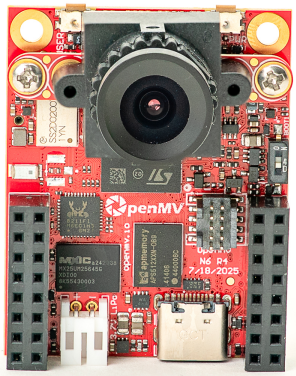

Ref.	Description
U1	STM32N657A0 (Cortex-M55 800 MHz + 600 GOPS NPU + GPU)
CAM	Camera module connector (M12 lens mount)
USB	USB-C connector (High-Speed 480 Mbps)
SD	microSD card slot (UHS-I)
ANT	WiFi/BLE antenna
IMU	On-board accelerometer and gyroscope
MIC	On-board microphone
LED	RGB LED
SW	Main button
SW2	Wakeup button

4.2 Power Tree

The OpenMV N6 can be powered from RAW (3.6\u20135 V, always-on), VIN (5 V), USB-C, or a 3.7 V LiPo battery with integrated charging. The RAW pin remains active in all power modes including off and deepsleep. Deepsleep current is less than 50 \u00B5A, enabling battery life of 4+ years in sleep-heavy applications.

5 General Info

Dimension	Value
Lens Mount	M12 (S-mount), interchangeable
Mounting	2 mounting holes
Operating Temperature	-40°C to +85°C

6 Certifications

Certification	Region	Details
RoHS	EU	Compliant with EU Directive 2011/65/EU (RoHS 2) and amendment 2015/863 (RoHS 3). All components and solder are lead-free.
REACH	EU	Compliant with EU Regulation (EC) No 1907/2006.

7 Company Information

Field	Details
Website	https://openmv.io
Documentation	https://docs.openmv.io
Support	https://forums.openmv.io

8 Reference Documentation

Reference	Link / Document
Product Page	https://openmv.io/products/openmv-n6
Documentation	https://docs.openmv.io
Community Forum	https://forums.openmv.io
STM32N657A0	https://www.st.com/en/microcontrollers-microprocessors/stm32n6.html
Edge Impulse	https://edgeimpulse.com
OpenMV IDE	https://openmv.io/pages/download

9 Revision History

Date	Revision	Changes
2026-04-04	Rev 1	Initial public release.