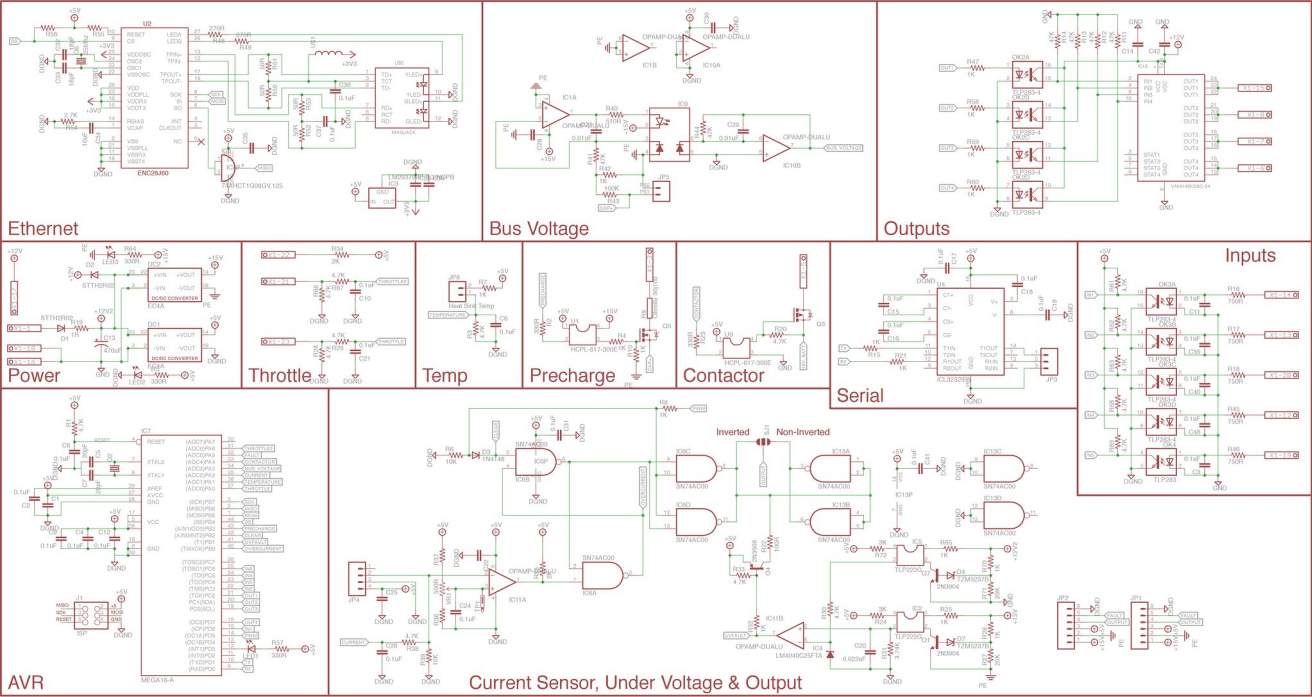
Ethernet
Bus Voltage
Outputs
Power
Throttle
Temp
Precharge
Contactor
Serial
Inputs
AVR
Current Sensor, Under Voltage & Output
Inverted
Non-Inverted

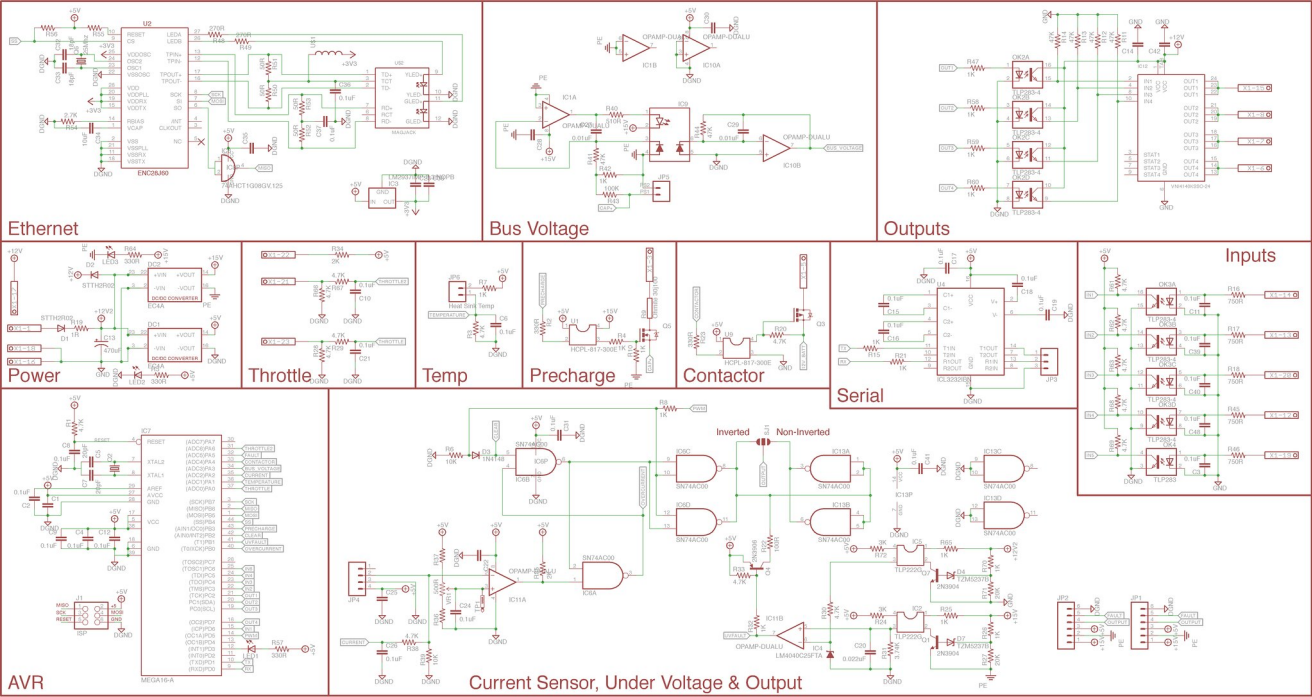
Ethernet
Bus Voltage
Outputs
Power
Throttle
Temp
Precharge
Contactor
Serial
Inputs
AVR
Current Sensor, Under Voltage & Output
Inverted
Non-Inverted

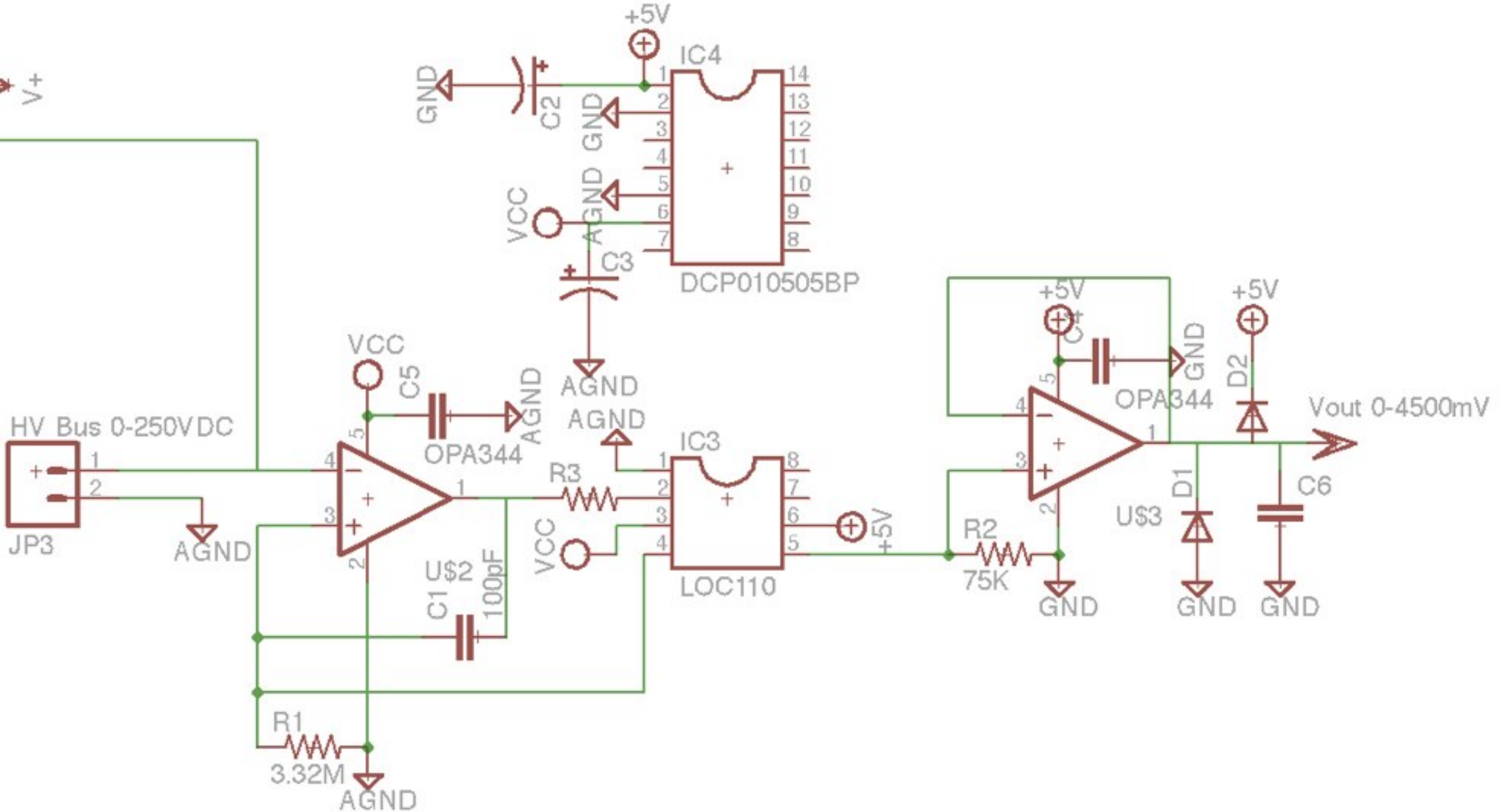
V+
+5V
IC4
GND
C2
GND
GND
VCC
AGND
C3
DCP010505BP
VCC
C5
AGND
OPA344
AGND
AGND
HV Bus 0-250VDC
JP3
AGND
R3
IC3
VCC
U$2
C1
100pF
LOC110
+5V
R2
75K
GND
+5V
C4
GND
OPA344
+5V
D2
Vout 0-4500mV
D1
U$3
C6
GND
GND
R1
3.32M
AGND

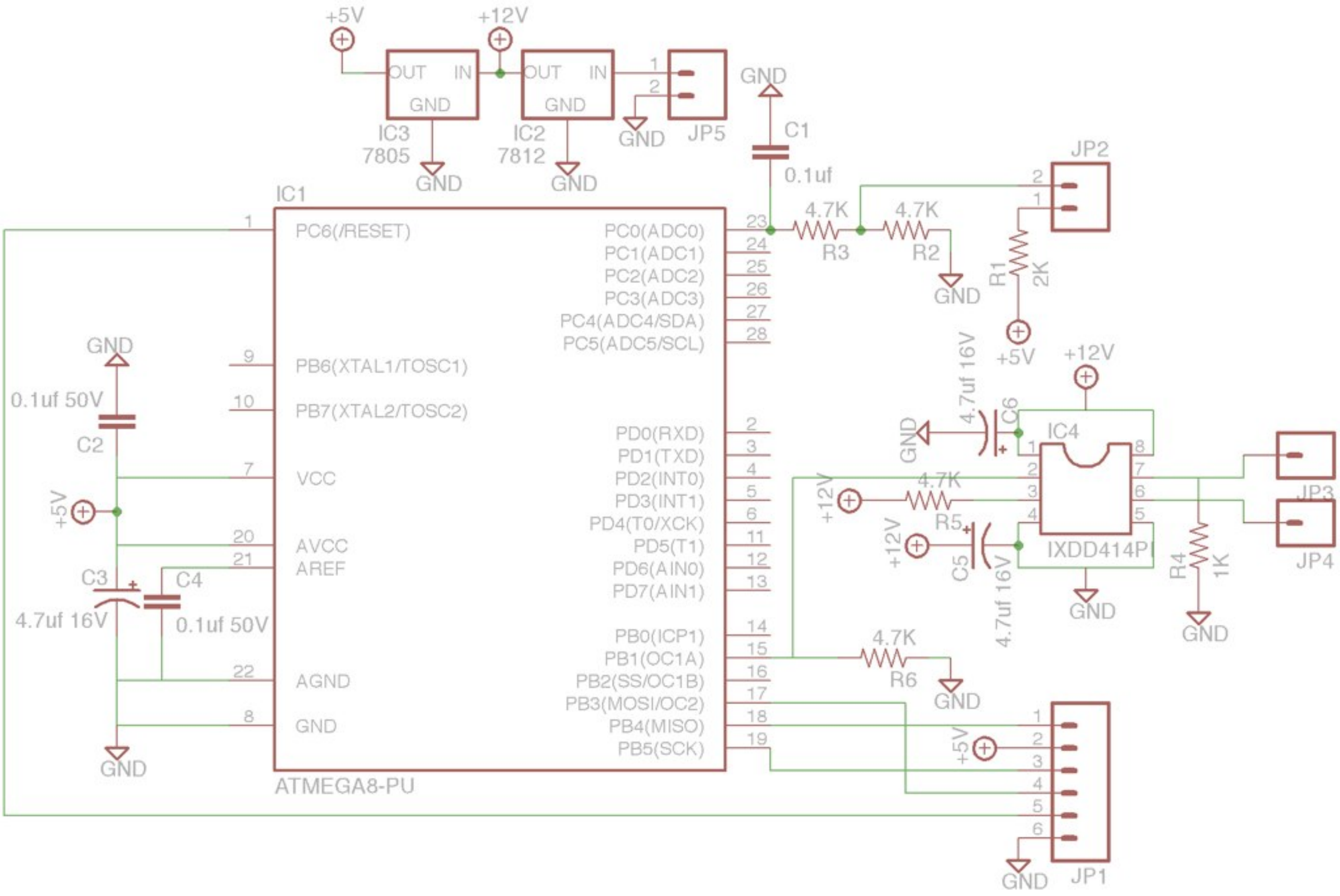
+5V
+12V
OUT
IN
GND
IC3
7805
IC2
7812
JP5
C1
0.1uf
JP2
IC1
PC6(/RESET)
PC0(ADC0)
PC1(ADC1)
PC2(ADC2)
PC3(ADC3)
PC4(ADC4/SDA)
PC5(ADC5/SCL)
4.7K
R3
R2
R1
2K
PB6(XTAL1/TOSC1)
PB7(XTAL2/TOSC2)
0.1uf 50V
C2
VCC
AVCC
AREF
C3
C4
4.7uf 16V
0.1uf 50V
AGND
PD0(RXD)
PD1(TXD)
PD2(INT0)
PD3(INT1)
PD4(T0/XCK)
PD5(T1)
PD6(AIN0)
PD7(AIN1)
PB0(ICP1)
PB1(OC1A)
PB2(SS/OC1B)
PB3(MOSI/OC2)
PB4(MISO)
PB5(SCK)
ATMEGA8-PU
4.7uf 16V
C6
IC4
IXDD414PI
R5
C5
R4
1K
JP3
JP4
R6
JP1