Rated Voltage (Vac)	**220**
Rated Power (w)	**750**
Rated Torque (N.m)	**2.39**
Peak Torque (N.m)	**8.36**
Rated Speed (rpm)	**3000**
Peak Speed (rpm)	**6500**
Rated Current (Amp)	**4.1**
Peak Current (Amp)	**15.4**
Torque Const (N.m/Amp)	**0.645**
Back EMF Const (V/krpm)	**39**
Resistance (Ω)	**1.7±10%**
Inductance (mH)	**8±20%**
Inertia (kg*m^2*10^{-4})	**1.5**
Poles	**10**
Encoder type	**23bit optical**
IP rating	**IP67**
Mass (Kg)	**2.1**

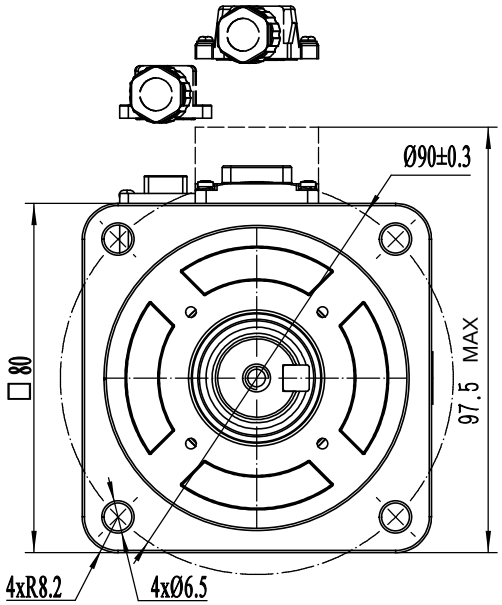

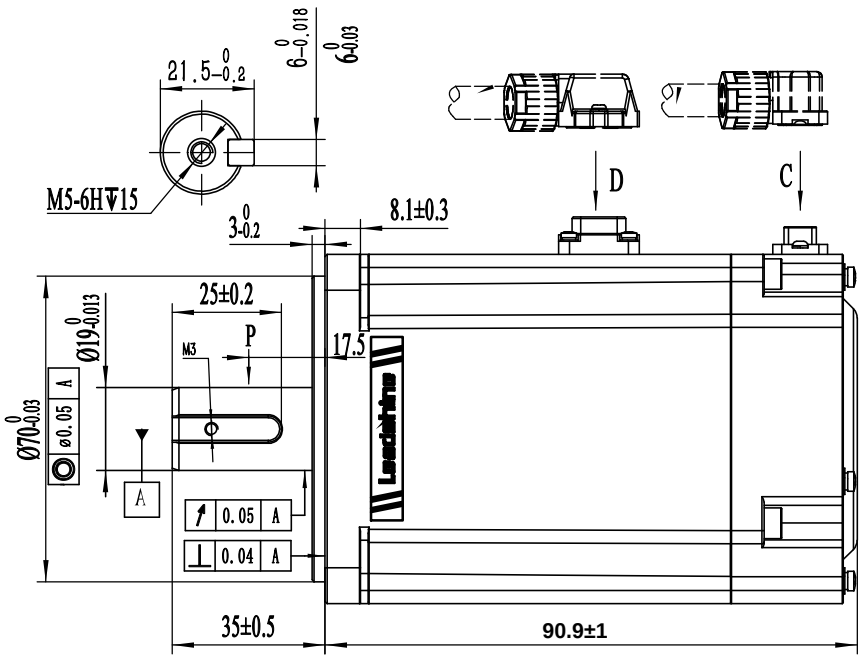

D

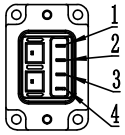

Wiring details of Power cable connector						
Pos	1	2	3	4	--	--
Signal	U	V	W	PE	--	--
Color	black	white	red	Yel/Gre	--	--

C

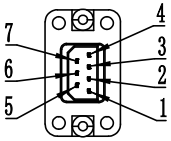

Wiring details of encoder cable connector							
Pos	1	2	3	4	5	6	7
Signal	PE	5V	0V	SD+	SD-	Bat+	Bat-
Color	shield	red	black	blue	yellow	brown	white

The curve of torque-speed

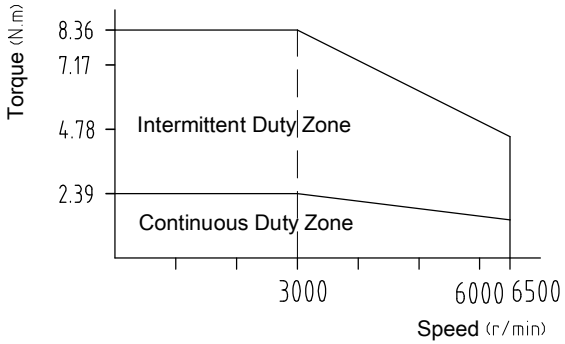

Leadshine Technology Co.,Ltd

ELM2H-0750LA80F

80mm, high inertia, 750w servo motor
23bit optical encoder, no brake

A3