Basic specification

- ✧ Frame size : 80mm
- ✧ Voltage input: 24-60Vdc
- ✧ Encoder : 17bit incremental
- ✧ Motor without brake
- ✧ 2.5 – 3 times overload
- ✧ 4 programmable input
- ✧ 2 programmable output
- ✧ RS232 for configuration

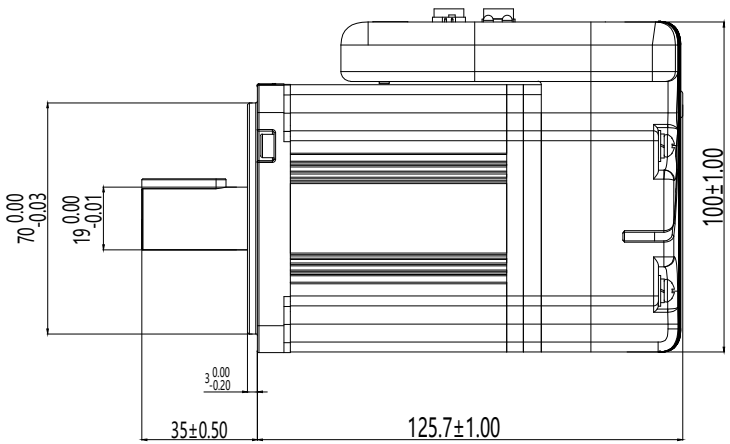

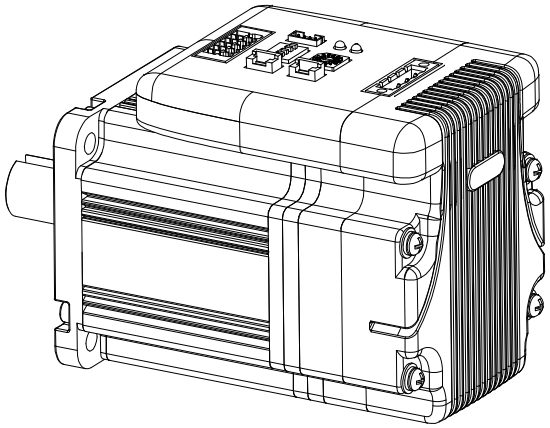

Part Number	iSV2-RS8075V48H
Rated Power(W)	750
Rated Torque(Nm)	2.39
Peak Torque(Nm)	7.17
Rated Speed(rpm)	3000
Peak Speed(rpm)	3900
Rated Voltage(Vdc)	48
Weight(kg)	2.52
Inertia(Kg.cm^2)	0.58
Torque(Nm/A)	0.127
Input Voltage(V)	24~60
Continuous Current(Arms)	19
Peak Current(A)	57
Logic Signal Current(mA)	10
Isolation Resistance(MΩ)	100
Protection Level	IP54 for motor IP20 for drive

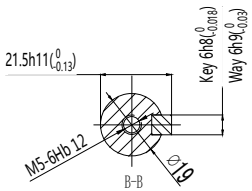

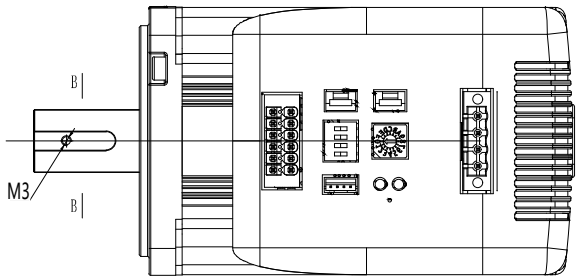

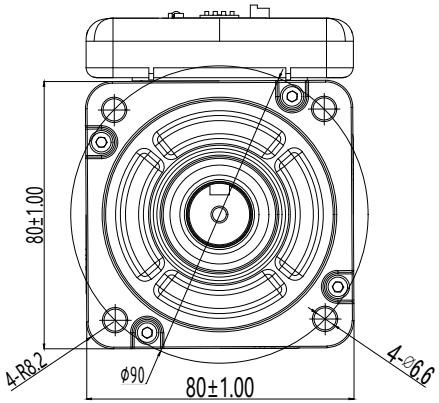

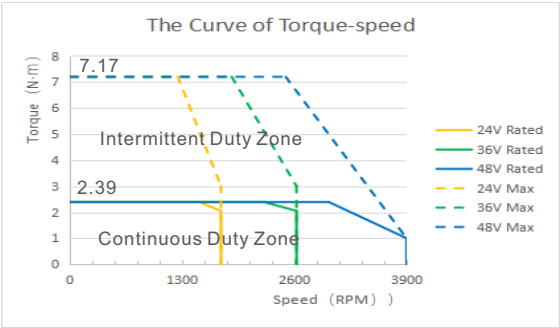

Modbus Communication

- ✧ Up to 32 axes supported in one network
- ✧ Modbus RTU based on RS485 communication
- ✧ Built-in indexer , Programmable 16-segment position table, positioning/homing/ limit/ quick stop/ JOG... supported

Leadshine Technology Co .Ltd

iSV2-RS8075V48H

Integrated servo motor Modbus

48V/750watt/80mm/2.39Nm/No brake