Rated Voltage (Vac)	**220**
Rated Power (w)	**200**
Rated Torque (N.m)	**0.64**
Peak Torque (N.m)	**2.23**
Rated Speed (rpm)	**3000**
Peak Speed (rpm)	**6500**
Rated Current (Amp)	**1.5**
Peak Current (Amp)	**5.4**
Torque Const (N.m/Amp)	**0.447**
Back EMF Const (V/krpm)	**27**
Resistance (Ω)	**6.8±10%**
Inductance (mH)	**16.7± 20%**
Inertia (kg*m^2*10^{-4})	**0.28**
Poles	**10**
Encoder type	**23bit optical**
IP rating	**IP67**
Mass (Kg)	**0.95**

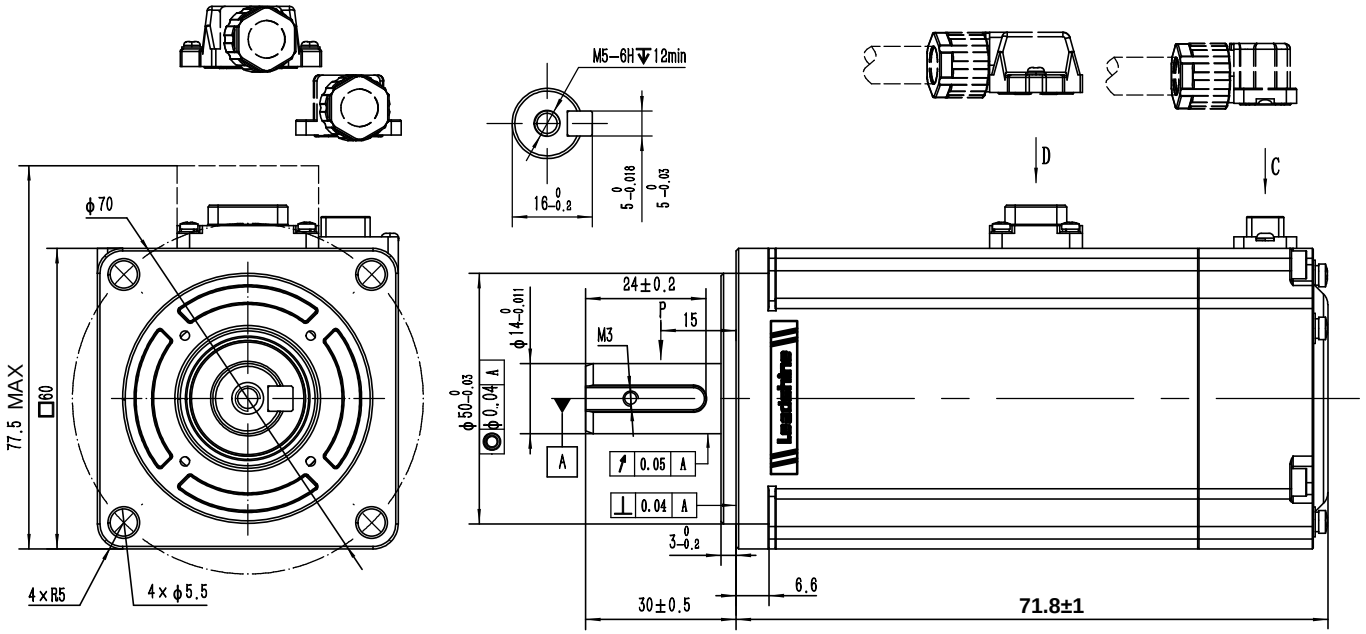

D

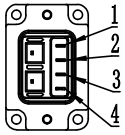

Wiring details of Power cable connector						
Pos	1	2	3	4	--	--
Signal	U	V	W	PE	--	--
Color	black	white	red	Yel/Gre	--	--

C

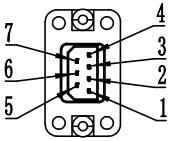

Wiring details of encoder cable connector							
Pos	1	2	3	4	5	6	7
Signal	PE	5V	0V	SD+	SD-	Bat+	Bat-
Color	shield	red	black	blue	yellow	brown	white

The curve of torque-speed

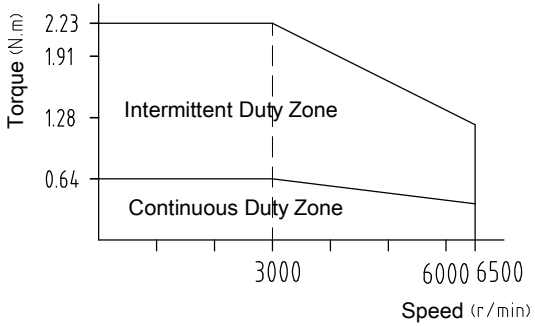

Leadshine Technology Co.,Ltd

ELM2H-0200LA60F

60mm, high inertia, 200w servo motor

23bit optical encoder, no brake

A3