Rated voltage (VDC)	48
Rated power (W)	750
Rated torque (N.m)	2.39
Max torque (N.m)	7.17
Rated speed (rpm)	3000
Max speed (rpm)	3900
Rated current (A)	19
Max current (A)	59
Torque constant (N.m/A)	0.142
Back EMF constant (mV/rpm)	8.6
Inertia(kg*m^2*10^{-4})	1.5
Resistance(Ω)	0.09
Inductance(mH)	0.38
Motor poles	10
Encoder	17 bit
Max radial load (N)	392
Max axial load (N)	147
Protection level	IP65
Mass (kg)	2.12

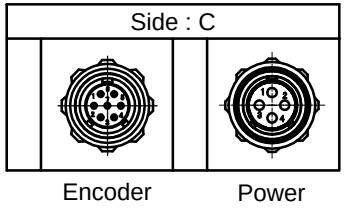

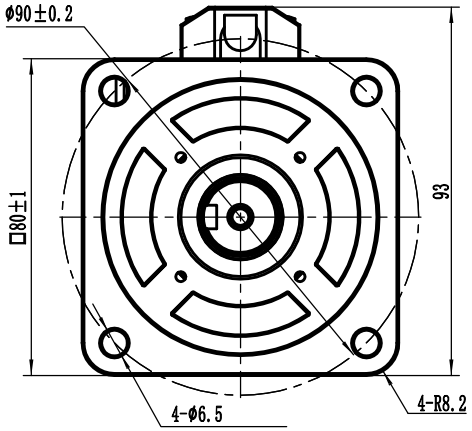

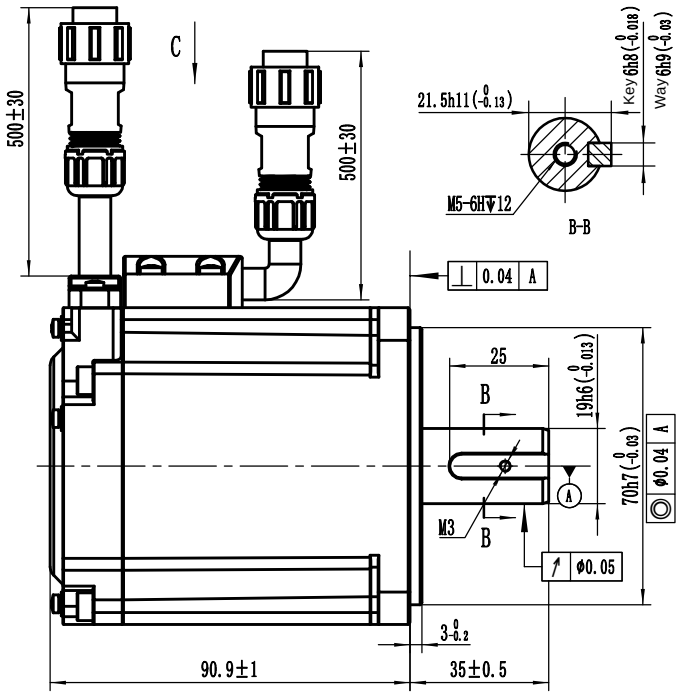

Type	Power connector			
Pin	1	2	3	4
Defi	U	V	W	PE
Color	Red	Blue	Black	Yellow/green

Type	Encoder connector						
Pin	1	2	3	4	5	6	7
Defi	GND	5V	0V	SD+	SD-	BAT+	BAT-
Color	PE	White	Black	Blue	Purple	Red	Yellow

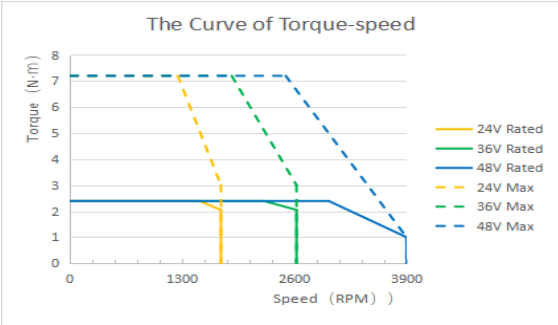

Leadshine Technology Co .Ltd

ELVM8075V48FH-M17-HD

750w servo motor with 17 bit absolute encoder

80mm frame size / 24-48V / No brake