Rated Voltage (Vac)	**220**
Rated Power (w)	**200**
Rated Torque (N.m)	**0.64**
Peak Torque (N.m)	**2.23**
Rated Speed (rpm)	**3000**
Peak Speed (rpm)	**6000**
Rated Current (Amp)	**1.5**
Peak Current (Amp)	**5.4**
Torque Const (N.m/Amp)	**0.4**
Back EMF Const (V/krpm)	**26.9**
Resistance (Ω)	**7.0**
Inductance (mH)	**12.7**
Inertia (kg*m^2*10^{-4})	**0.28**
Poles	**10**
Encoder type	**23bit magnetic**
IP rating	**IP67**
Mass (Kg)	**1.0**

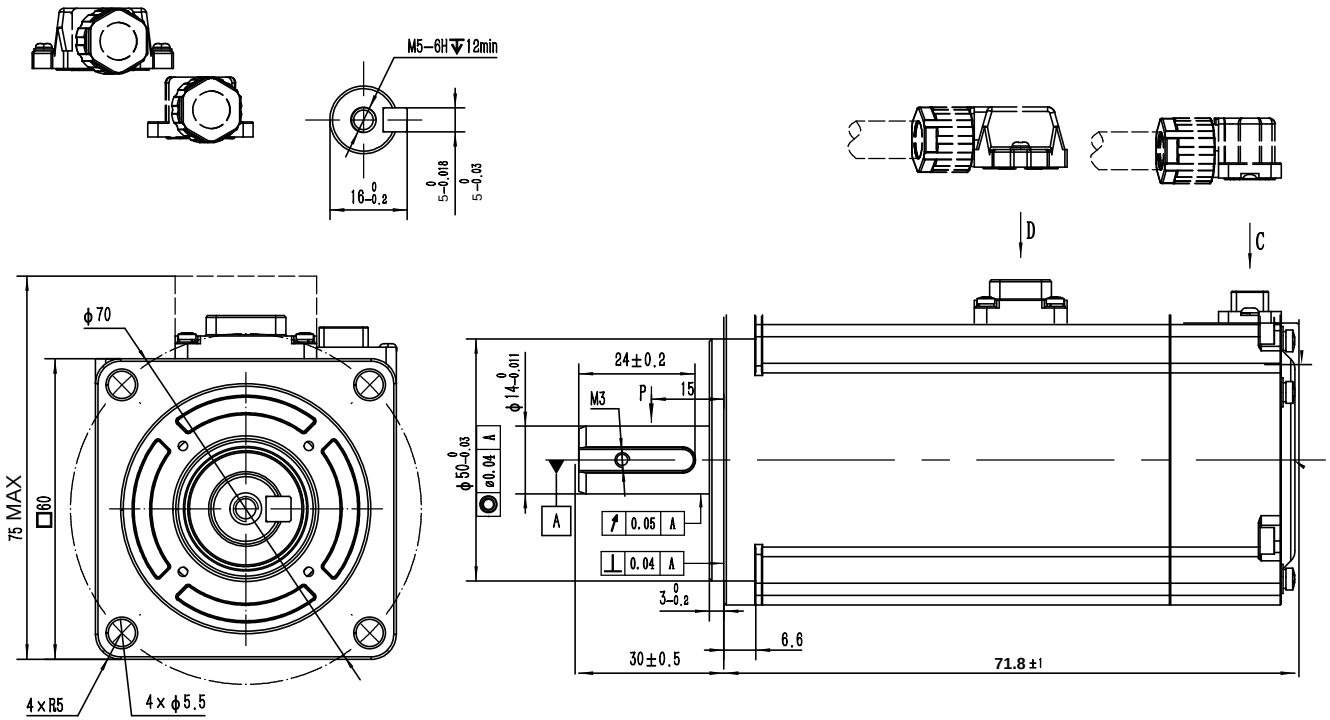

D

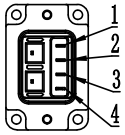

Wiring details of Power cable connector						
Pos	1	2	3	4	--	--
Signal	U	V	W	PE	--	--
Color	black	white	red	Yel/Gre	--	--

C

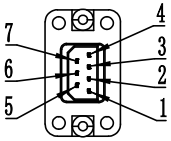

Wiring details of encoder cable connector							
Pos	1	2	3	4	5	6	7
Signal	PE	5V	0V	SD+	SD-	Bat+	Bat-
Color	shield	red	black	blue	yellow	brown	white

The curve of torque-speed

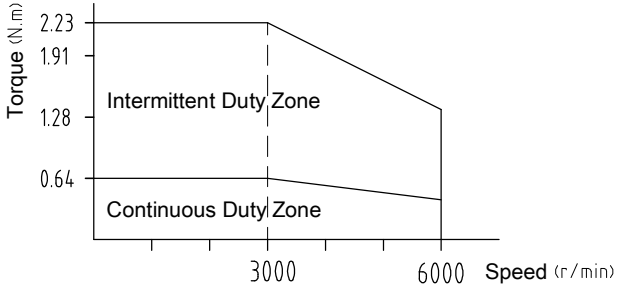

Leadshine Technology Co.,Ltd

ELM1H-0200MA60F

60mm,high inertia,200w servo motor
23bit magnetic encoder, no brake

A3