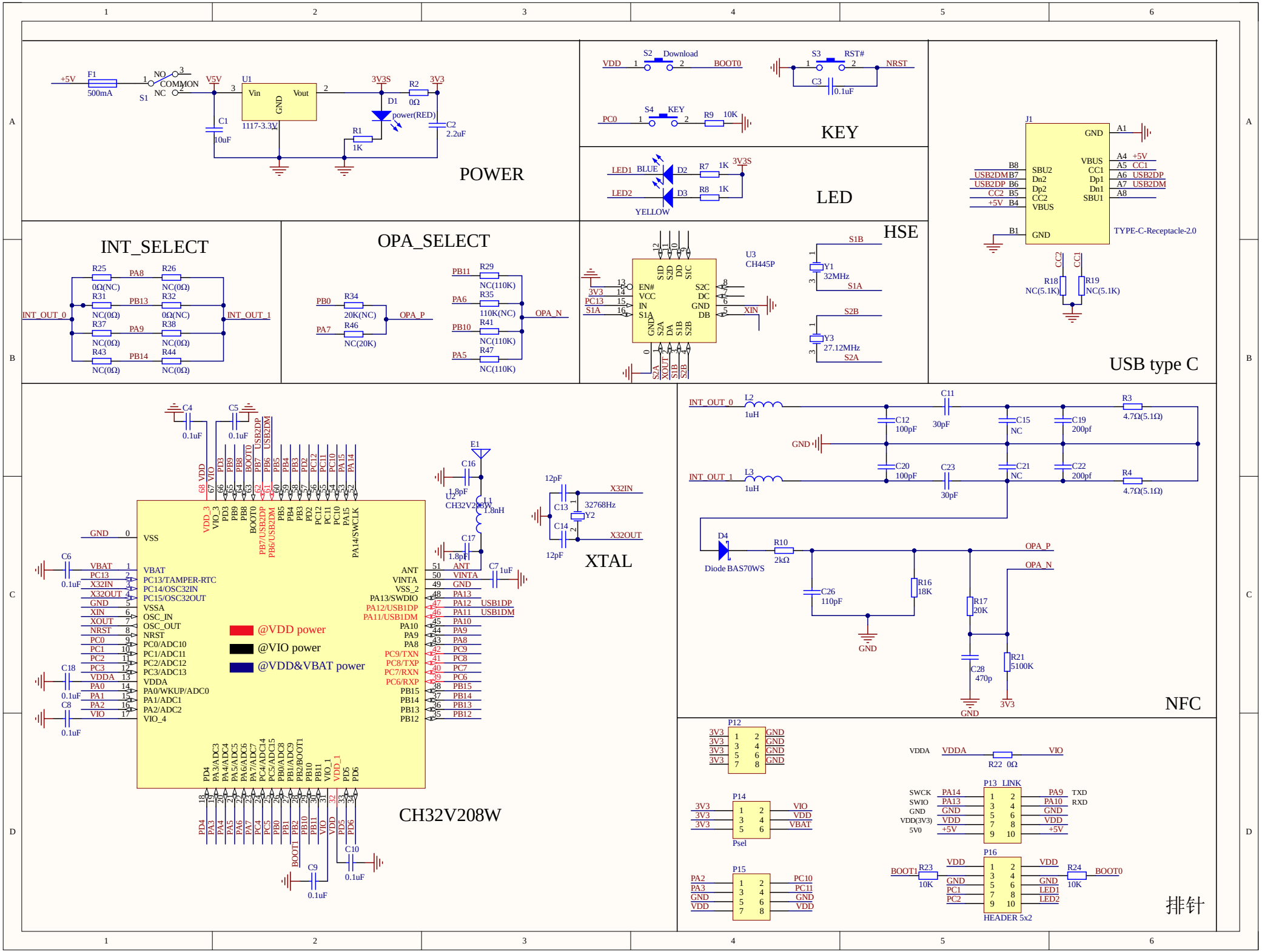
POWER
+5V
F1
500mA
S1
NO
COMMON
NC
V5V
U1
Vin
Vout
GND
1117-3.3V
C1
10uF
3V3S
R2
0Ω
3V3
D1
power(RED)
R1
1K
C2
2.2uF
KEY
S2
Download
VDD
BOOT0
S3
RST#
NRST
C3
0.1uF
S4
KEY
PC0
R9
10K
LED
LED1
BLUE
D2
R7
1K
3V3S
LED2
D3
R8
1K
YELLOW
HSE
U3
CH445P
EN#
VCC
IN
S1A
3V3
PC13
S1A
S2C
DC
GND
DB
XIN
S1B
Y1
32MHz
S1A
S2B
Y3
27.12MHz
S2A
USB type C
J1
GND
A1
VBUS
A4 +5V
CC1
A5 CC1
A6 USB2DP
A7 USB2DM
A8
SBU2
Dn2
Dp2
CC2
VBUS
B8
USB2DM B7
USB2DP B6
CC2 B5
+5V B4
B1
GND
Dp1
Dn1
SBU1
TYPE-C-Receptacle-2.0
CC2
CC1
R18
NC(5.1K)
R19
NC(5.1K)
INT_SELECT
R25
PA8
R26
0Ω(NC)
NC(0Ω)
R31
PB13
R32
INT_OUT_0
NC(0Ω)
0Ω(NC)
INT_OUT_1
R37
PA9
R38
NC(0Ω)
NC(0Ω)
R43
PB14
R44
NC(0Ω)
NC(0Ω)
OPA_SELECT
PB0
R34
20K(NC)
OPA_P
PA7
R46
NC(20K)
PB11
R29
NC(110K)
PA6
R35
110K(NC)
OPA_N
PB10
R41
NC(110K)
PA5
R47
NC(110K)
CH32V208W
C4
0.1uF
C5
0.1uF
VDD
VIO
USB2DP
USB2DM
VDD_3
VIO_3
PB7/USB2DP
PB6/USB2DM
PA14/SWCLK
GND
VSS
VBAT
PC13/TAMPER-RTC
PC14/OSC32IN
PC15/OSC32OUT
VSSA
OSC_IN
OSC_OUT
NRST
PC0/ADC10
PC1/ADC11
PC2/ADC12
PC3/ADC13
VDDA
PA0/WKUP/ADC0
PA1/ADC1
PA2/ADC2
VIO_4
ANT
VINTA
VSS_2
PA13/SWDIO
PA12/USB1DP
PA11/USB1DM
PA10
PA9
PA8
PC9/TXN
PC8/TXP
PC7/RXN
PC6/RXP
PB15
PB14
PB13
PB12
@VDD power
@VIO power
@VDD&VBAT power
C6
0.1uF
C18
0.1uF
C8
0.1uF
C7
1uF
C9
0.1uF
C10
0.1uF
XTAL
E1
C16
1.8pF
U2
CH32V208W
L1
1.8nH
C17
1.8pF
12pF
C13
32768Hz
Y2
C14
12pF
X32IN
X32OUT
NFC
INT_OUT_0
L2
1uH
C11
30pF
R3
4.7Ω(5.1Ω)
C12
100pF
C15
NC
C19
200pf
GND
C20
100pF
C23
30pF
C21
NC
C22
200pf
INT_OUT_1
L3
1uH
R4
4.7Ω(5.1Ω)
D4
Diode BAS70WS
R10
2kΩ
OPA_P
OPA_N
C26
110pF
R16
18K
R17
20K
C28
470p
R21
5100K
3V3
排针
P12
3V3
GND
P14
VIO
VDD
VBAT
Psel
P15
PA2
PA3
GND
VDD
PC10
PC11
GND
VDD
VDDA
R22 0Ω
VIO
P13 LINK
SWCK
SWIO
GND
VDD(3V3)
5V0
PA14
PA13
GND
VDD
+5V
PA9 TXD
PA10 RXD
P16
BOOT1
R23
10K
R24
10K
BOOT0
PC1
PC2
LED1
LED2
HEADER 5x2

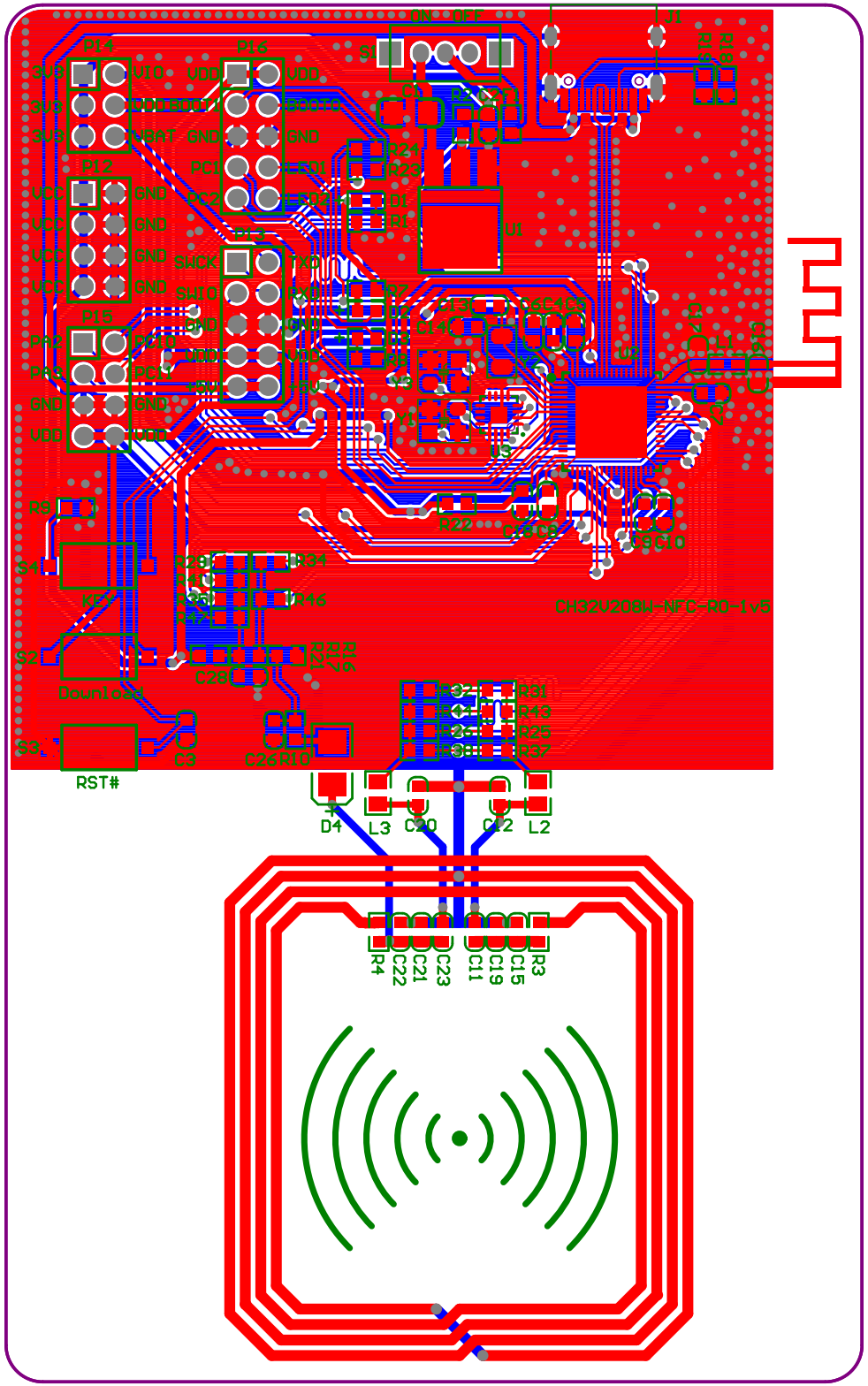
CH32V208W-NFC-EO-1v5
Download
RST#
D4
L3
C20
C12
L2
R4
C22
C21
C23
C11
C19
C15
R3