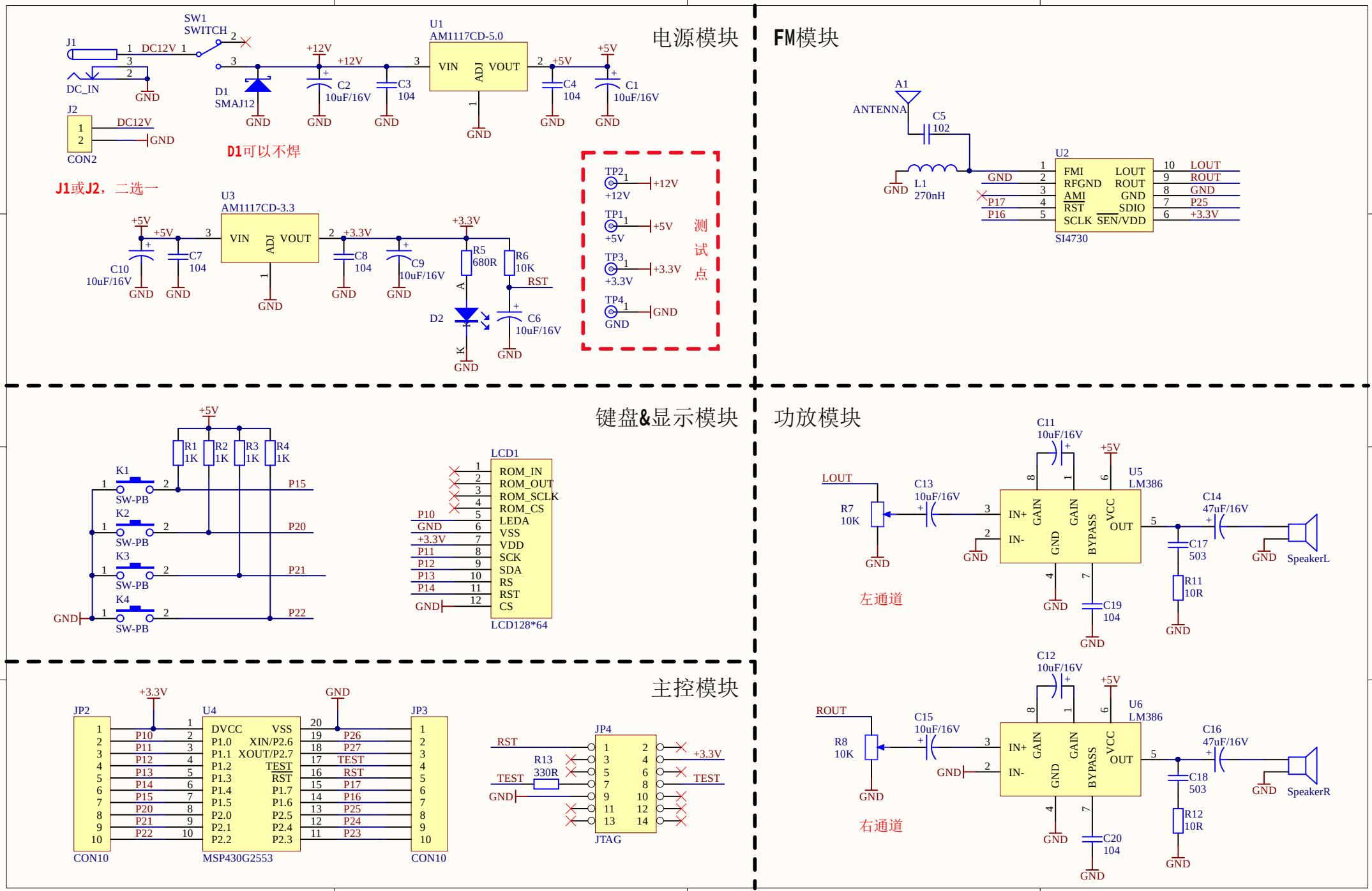
电源模块
J1
DC_IN
DC12V
GND
SW1
SWITCH
D1
SMAJ12
+12V
C2
10uF/16V
C3
104
U1
AM1117CD-5.0
VIN
ADJ
VOUT
C4
104
+5V
C1
10uF/16V
J2
CON2
D1可以不焊
J1或J2，二选一
U3
AM1117CD-3.3
+3.3V
C10
10uF/16V
C7
104
C8
104
C9
10uF/16V
R5
680R
R6
10K
RST
D2
C6
10uF/16V
TP2
TP1
TP3
TP4
测试点
FM模块
A1
ANTENNA
C5
102
L1
270nH
U2
FMI
RFGND
AMI
RST
SCLK
LOUT
ROUT
GND
SDIO
SEN/VDD
P17
P16
P25
SI4730
键盘&显示模块
R1
1K
R2
1K
R3
1K
R4
1K
K1
K2
K3
K4
SW-PB
P15
P20
P21
P22
LCD1
ROM_IN
ROM_OUT
ROM_SCLK
ROM_CS
LEDA
VSS
VDD
SCK
SDA
RS
RST
CS
P10
P11
P12
P13
P14
LCD128*64
功放模块
C11
10uF/16V
U5
LM386
LOUT
R7
10K
C13
10uF/16V
IN+
IN-
GAIN
BYPASS
VCC
OUT
C14
47uF/16V
C17
503
R11
10R
C19
104
SpeakerL
左通道
C12
10uF/16V
U6
LM386
ROUT
R8
10K
C15
10uF/16V
C16
47uF/16V
C18
503
R12
10R
C20
104
SpeakerR
右通道
主控模块
JP2
CON10
U4
MSP430G2553
DVCC
VSS
P1.0
XIN/P2.6
P1.1
XOUT/P2.7
P1.2
TEST
P1.3
RST
P1.4
P1.7
P1.5
P1.6
P2.0
P2.5
P2.1
P2.4
P2.2
P2.3
JP3
JP4
JTAG
R13
330R