Basic Race Car

Learning Move Sensor

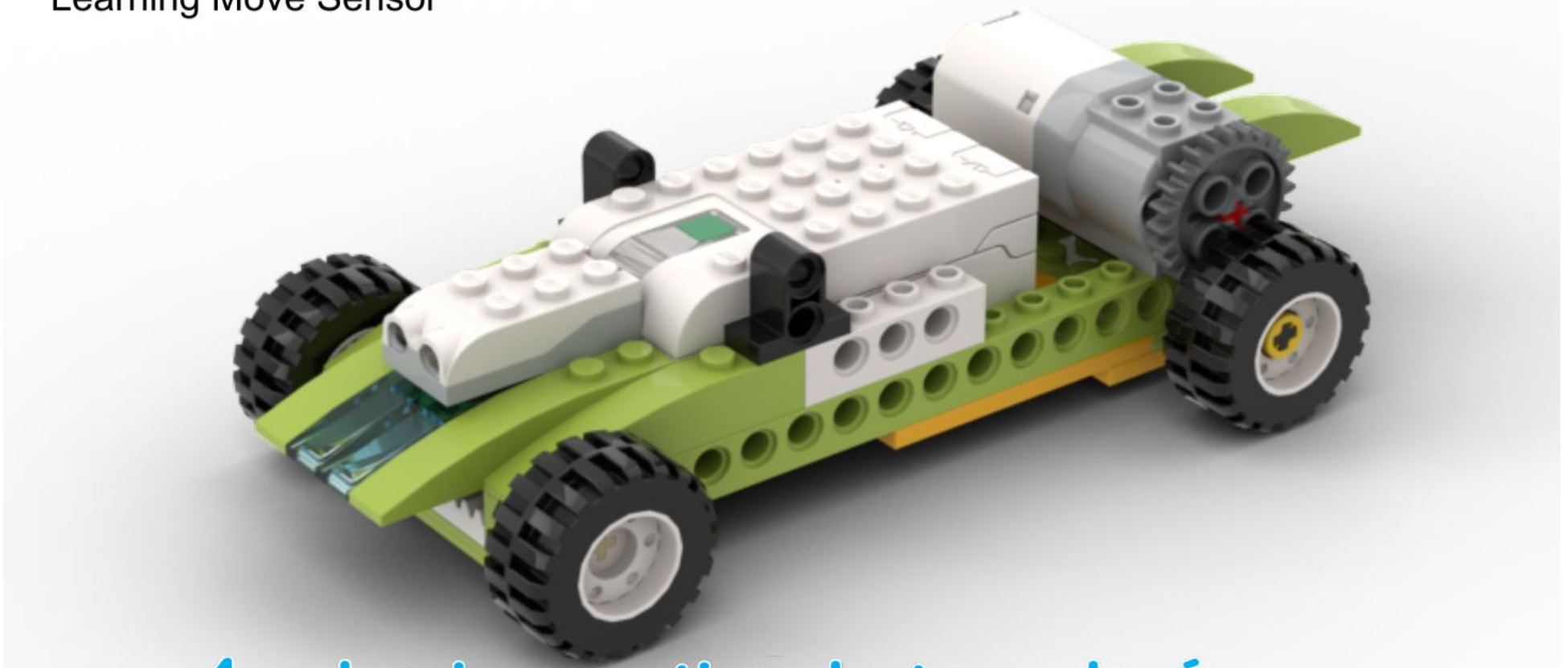

Academia creativa de tecnología

Tecnoaprendo

1

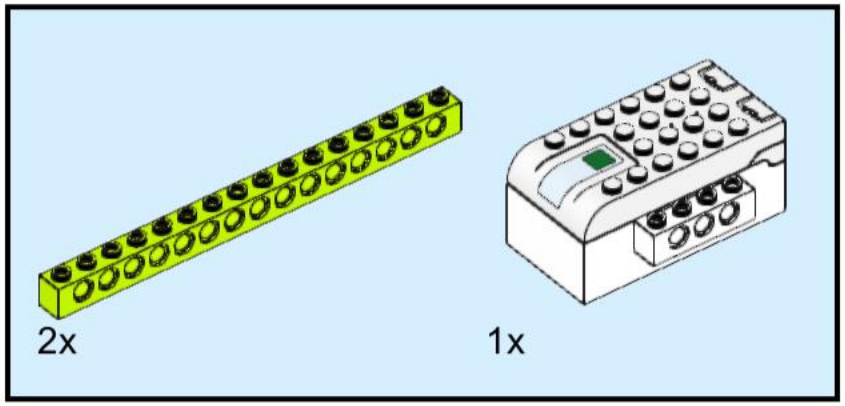

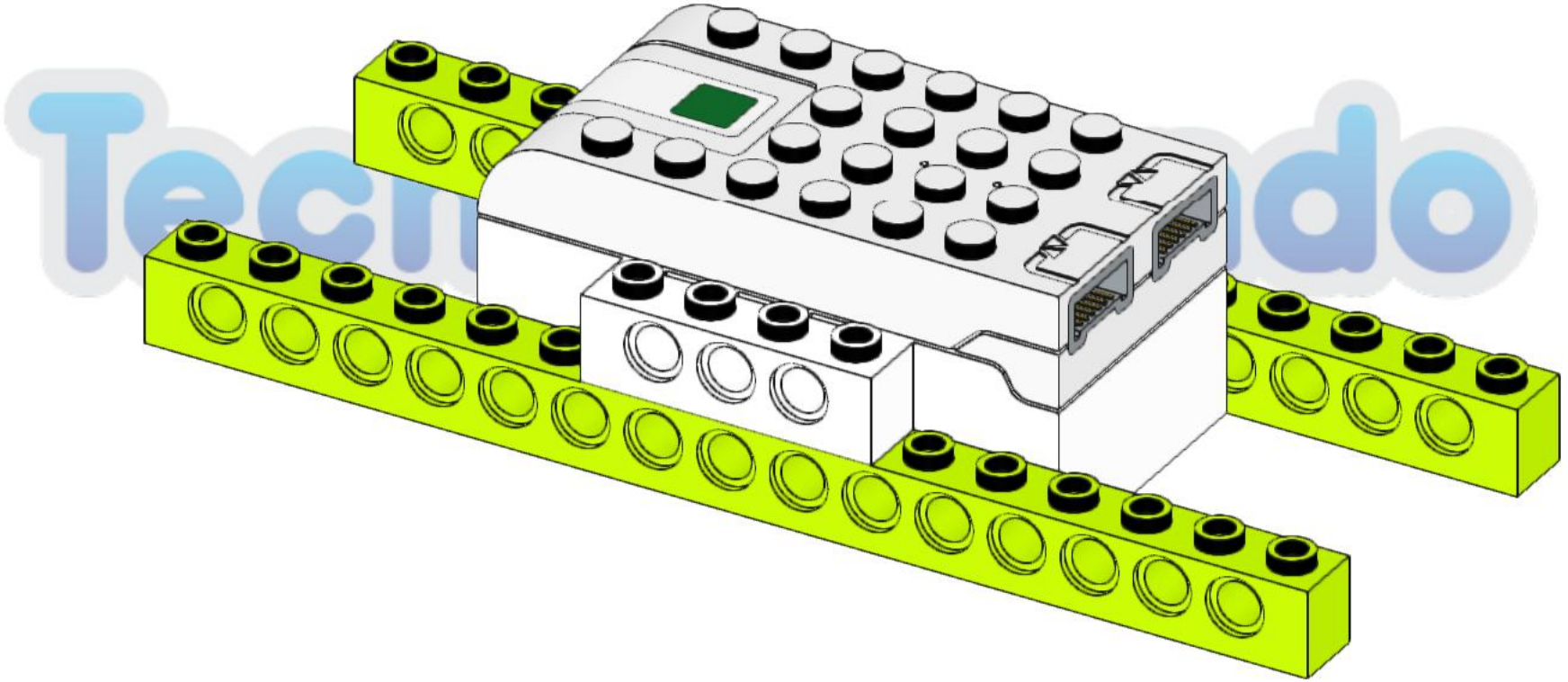

2

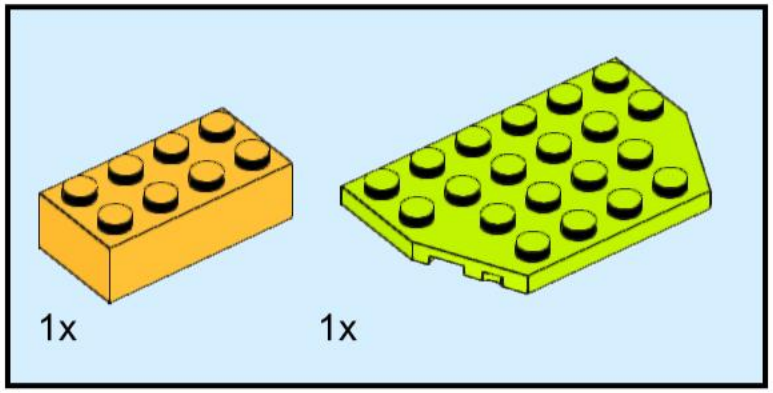

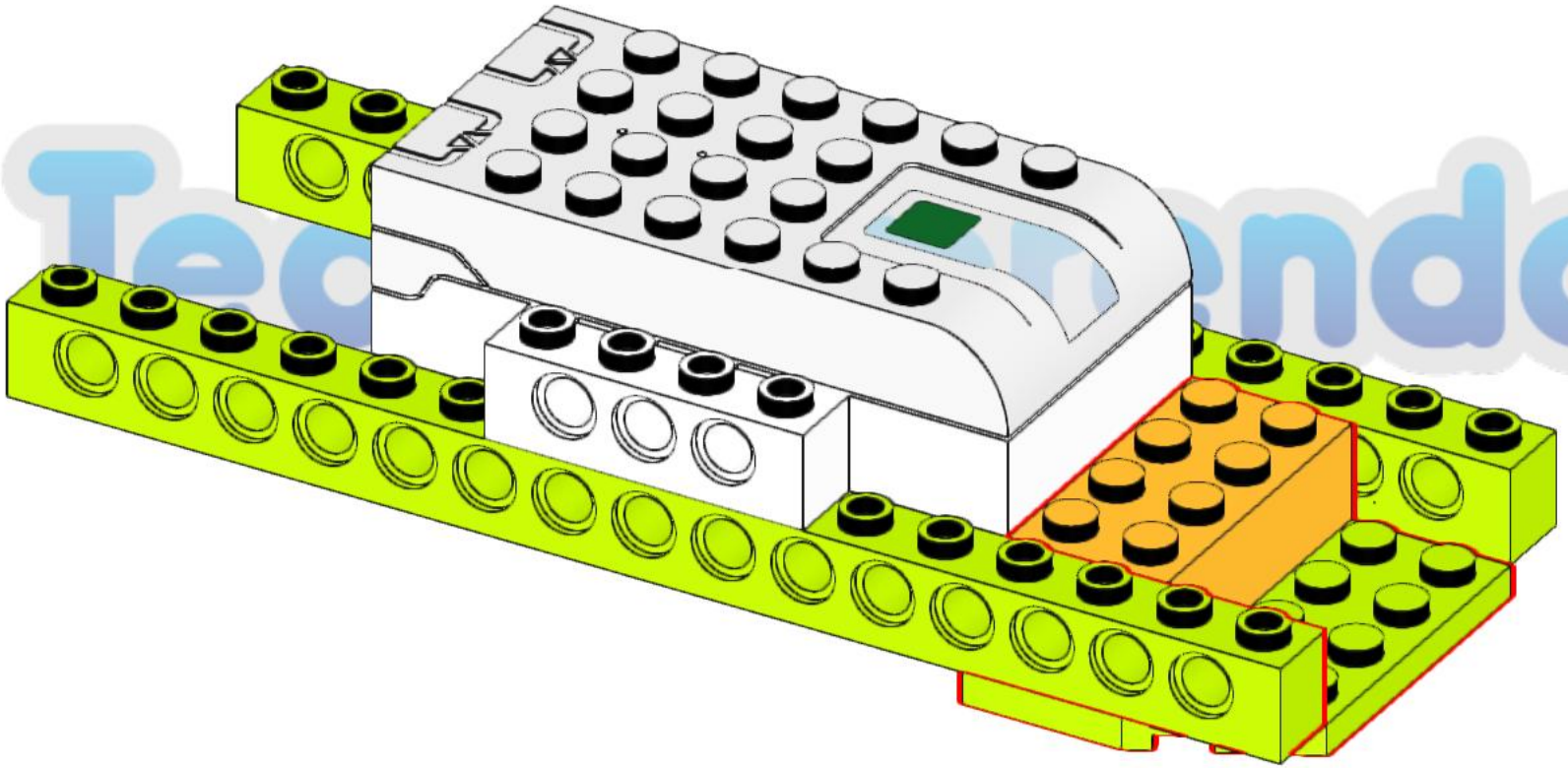

3

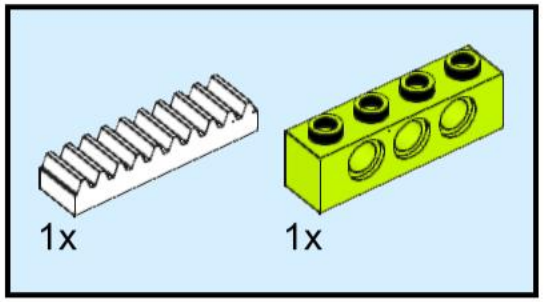

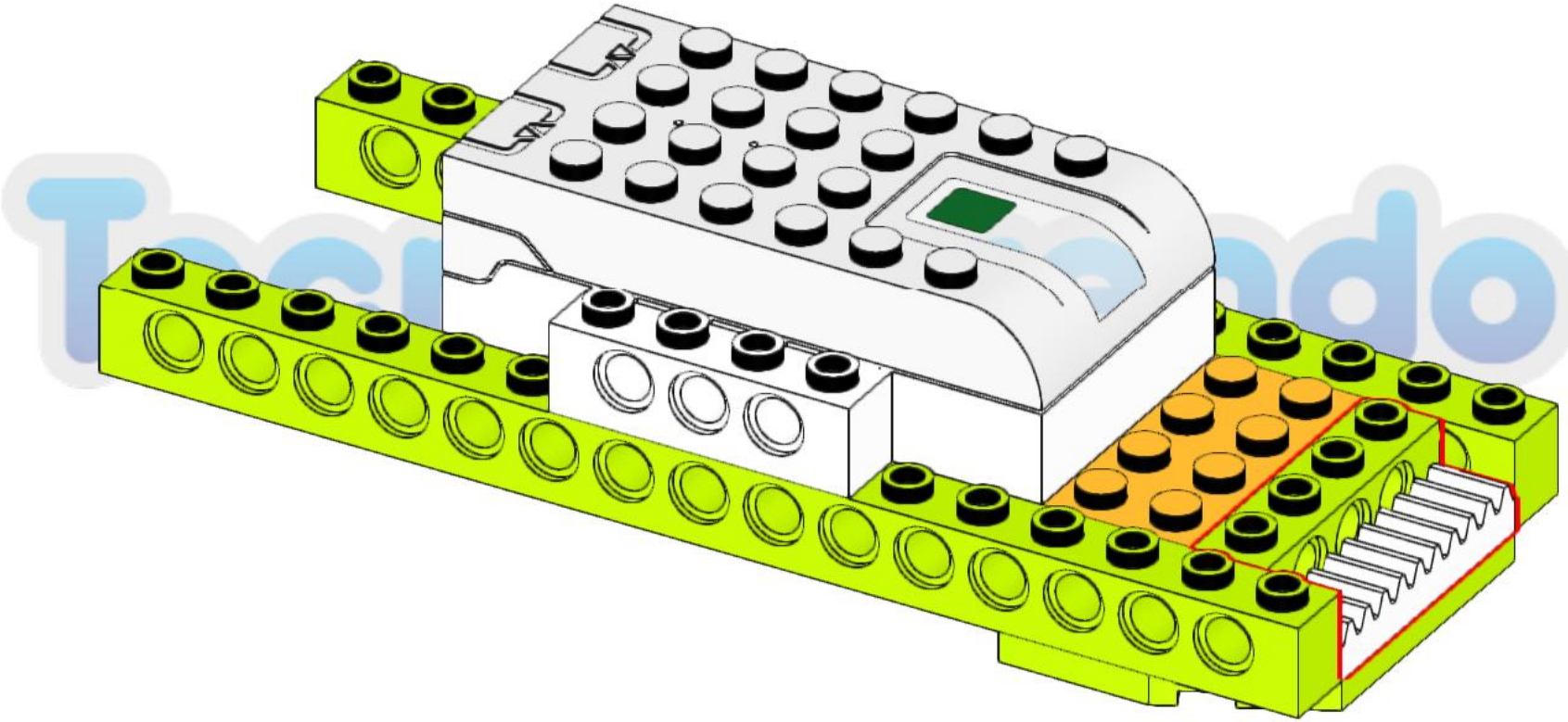

4

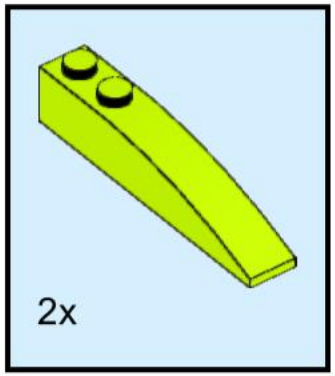

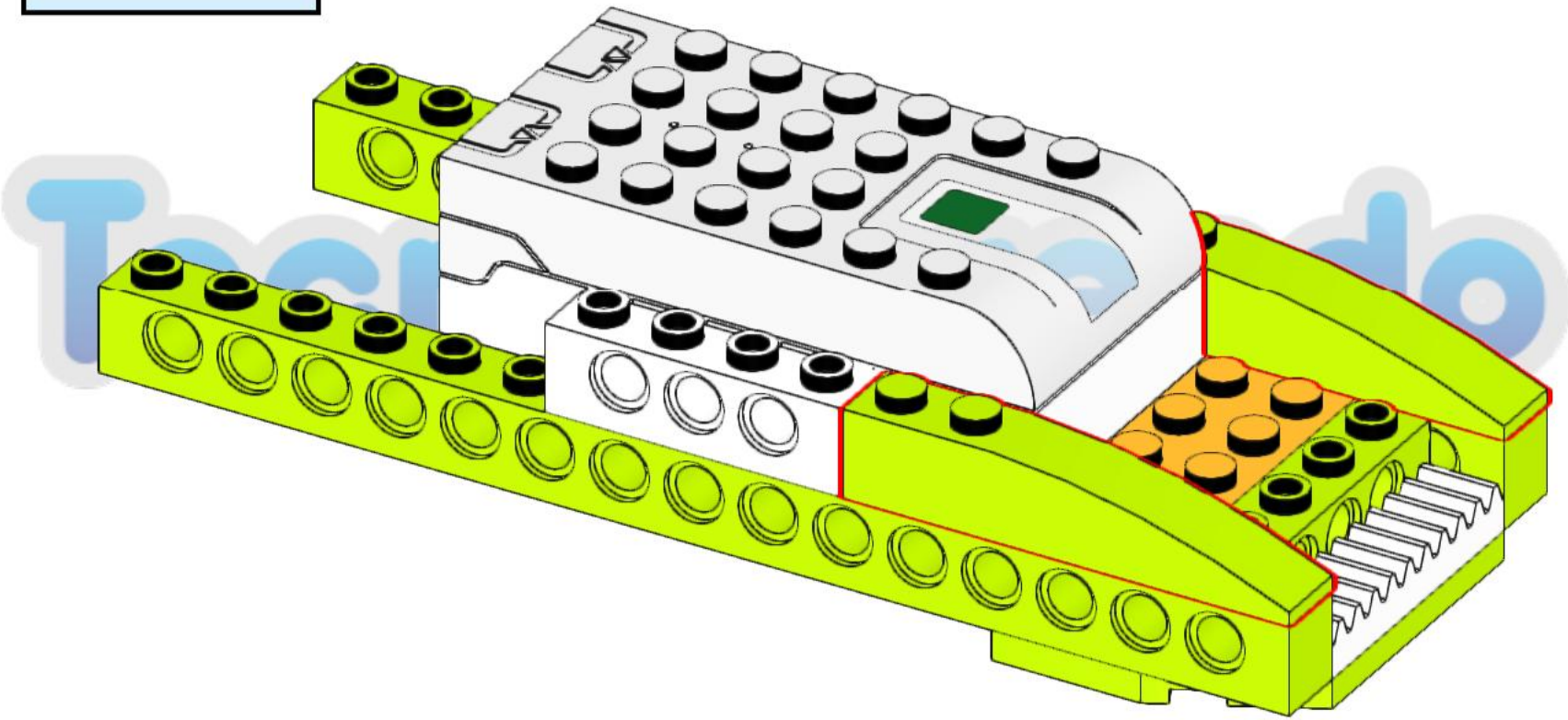

5

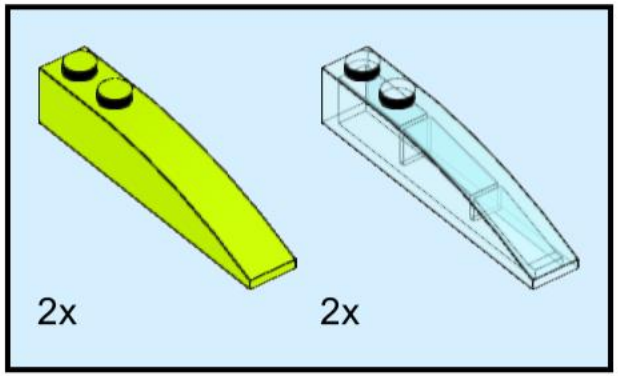

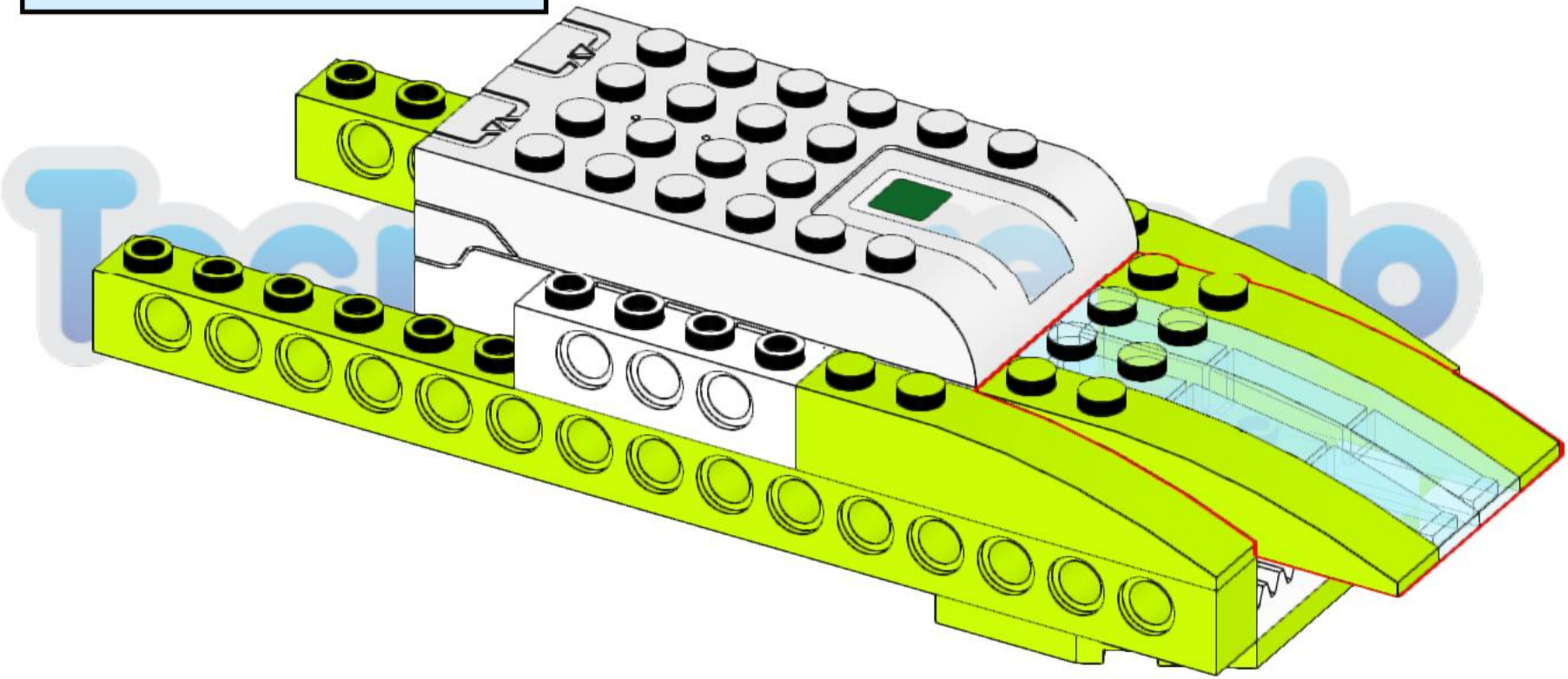

6

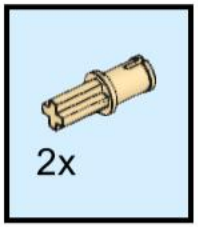

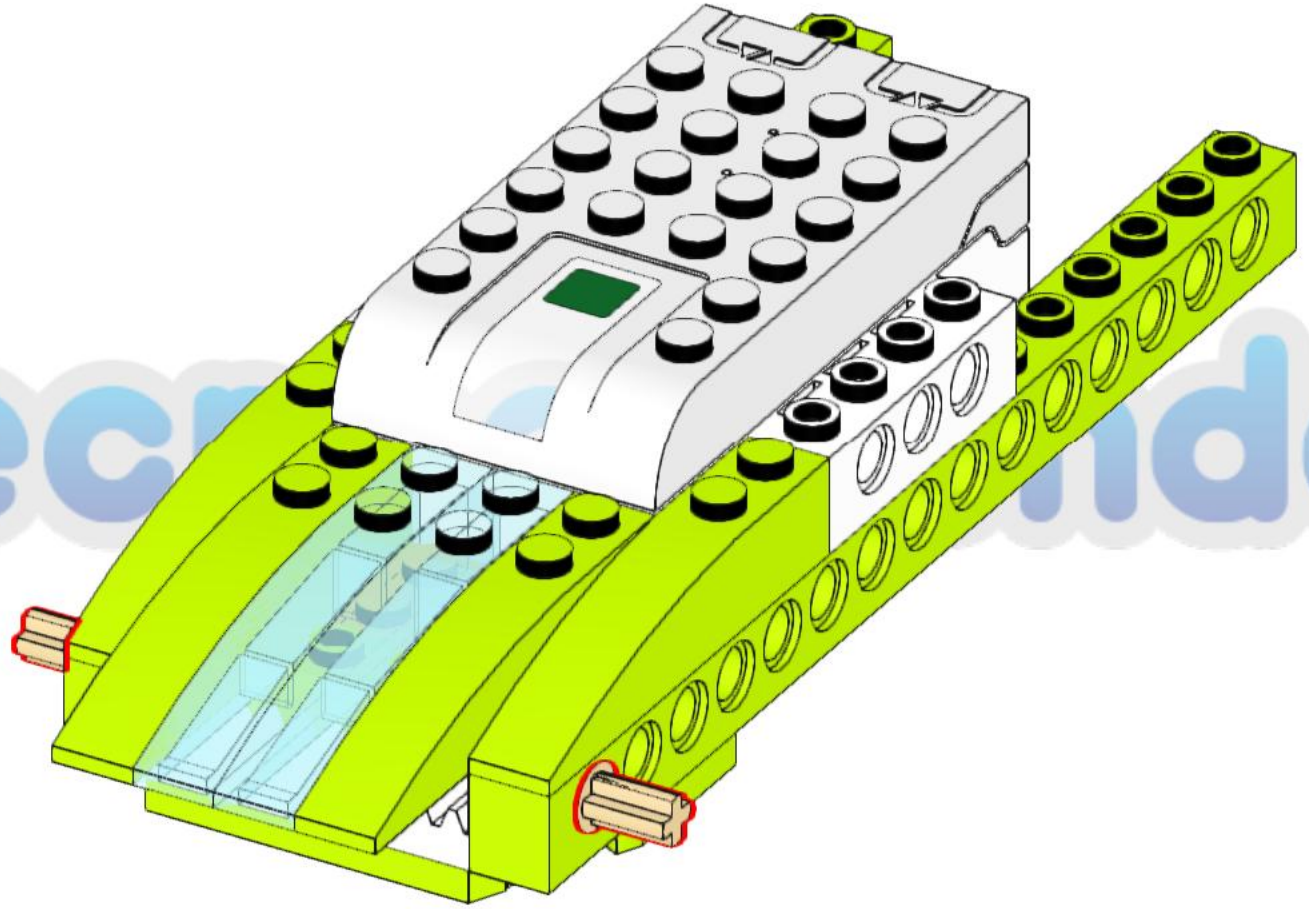

7

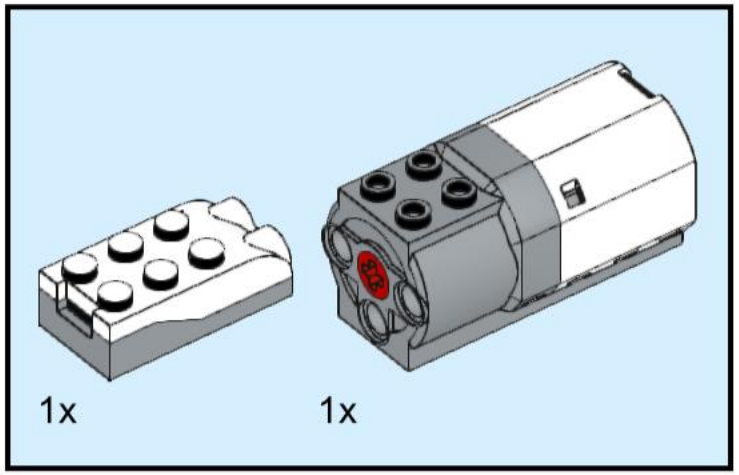

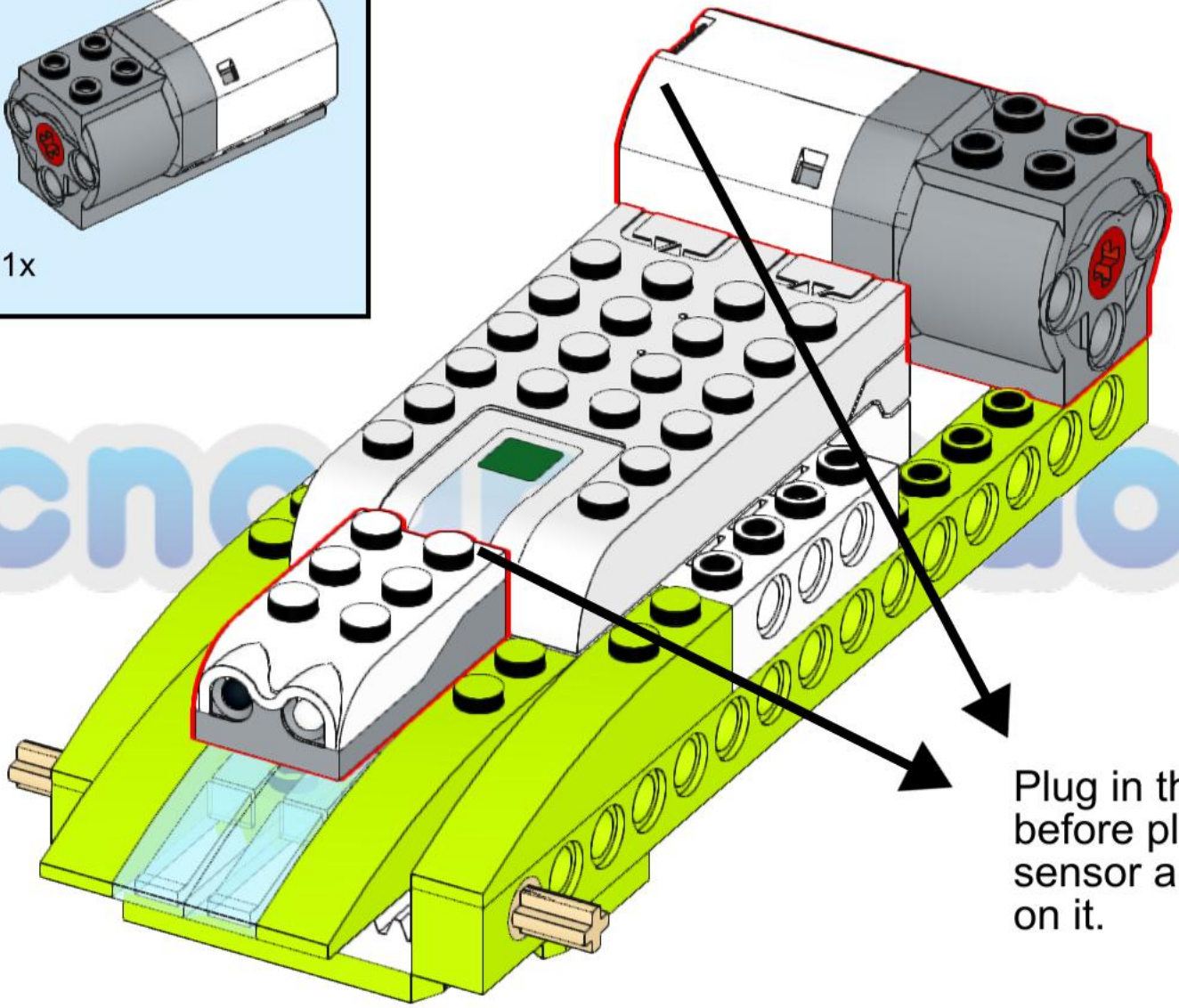

Plug in the cables before placing the sensor and motor on it.

8

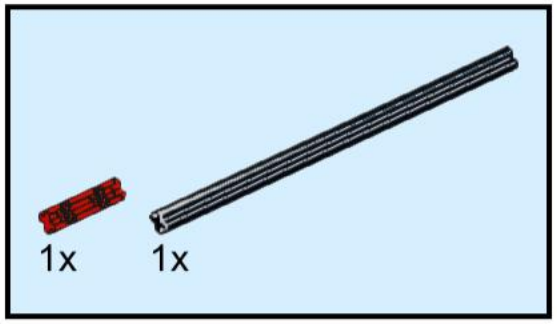

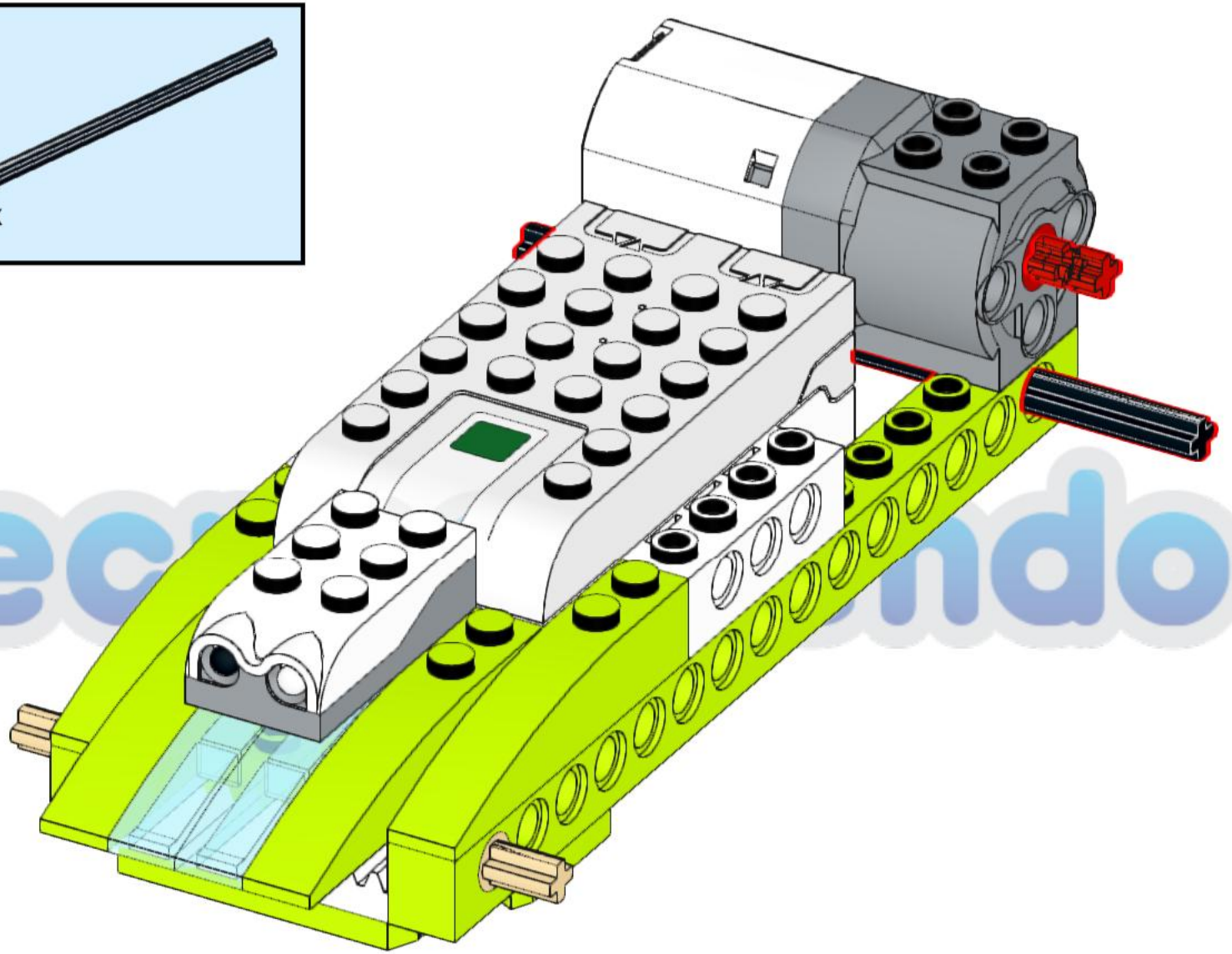

9

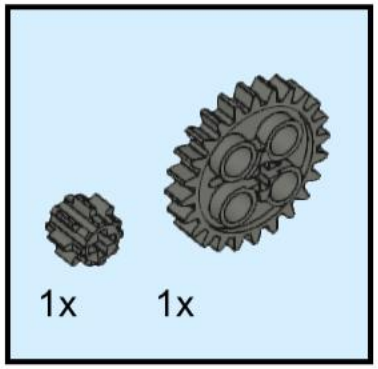

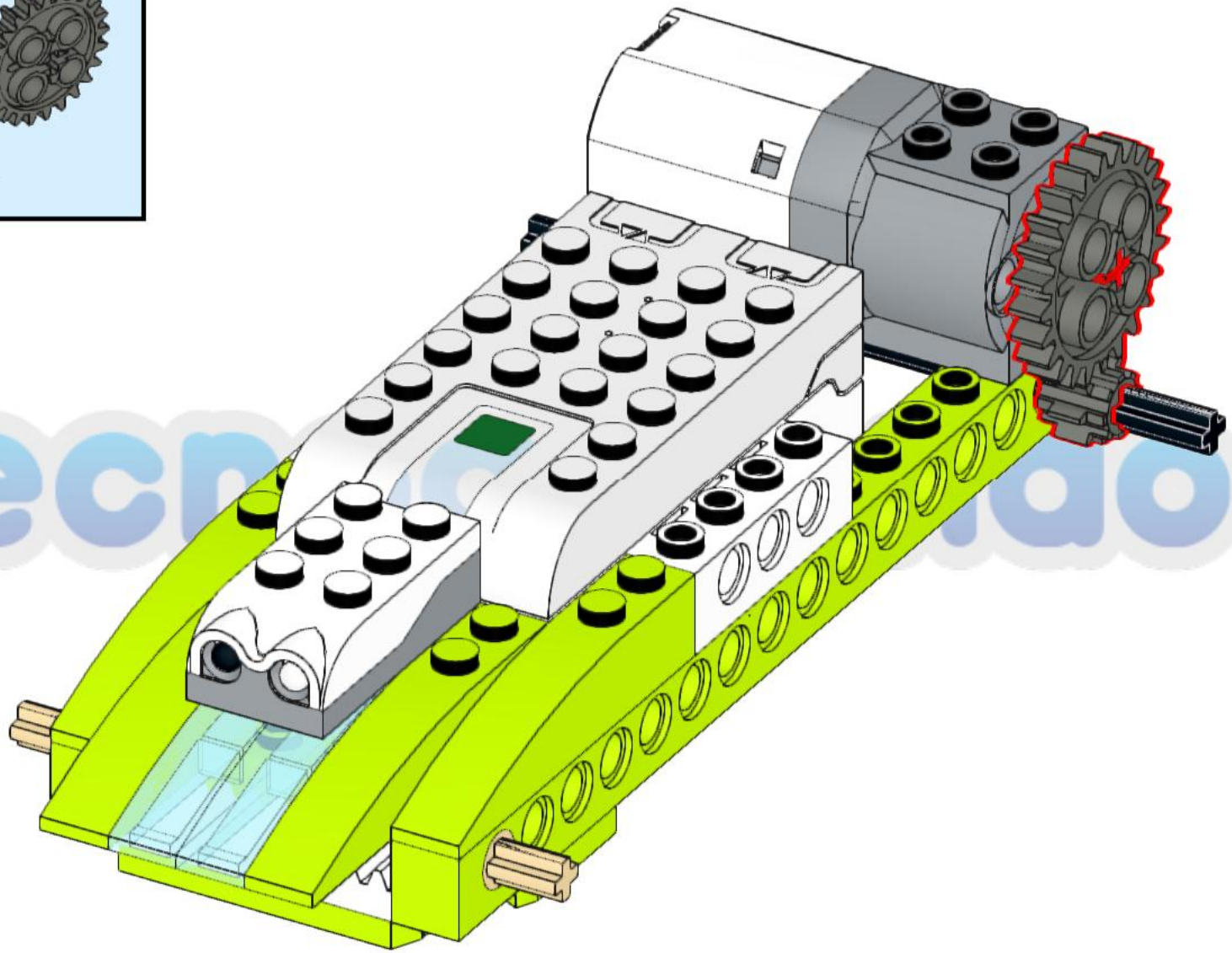

10

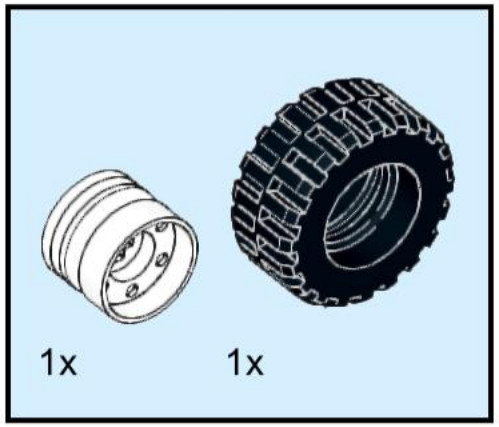

4x

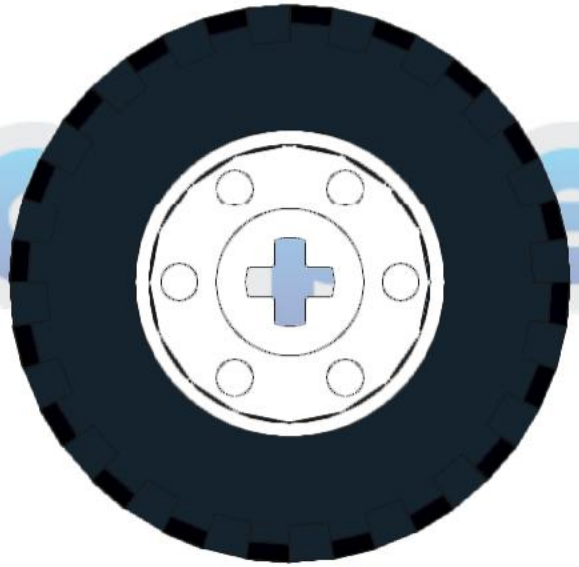

Tecnoendo

11

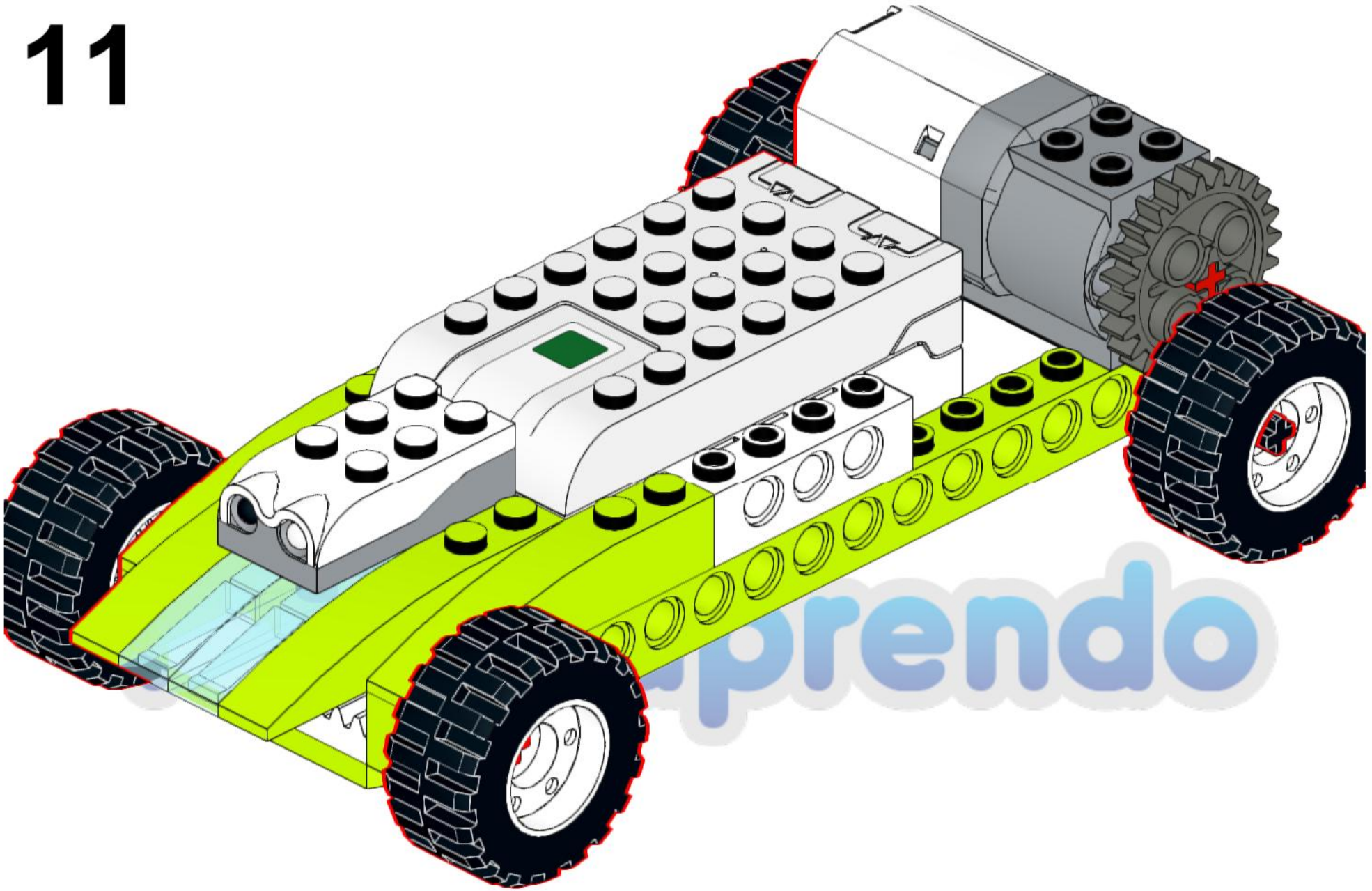

12

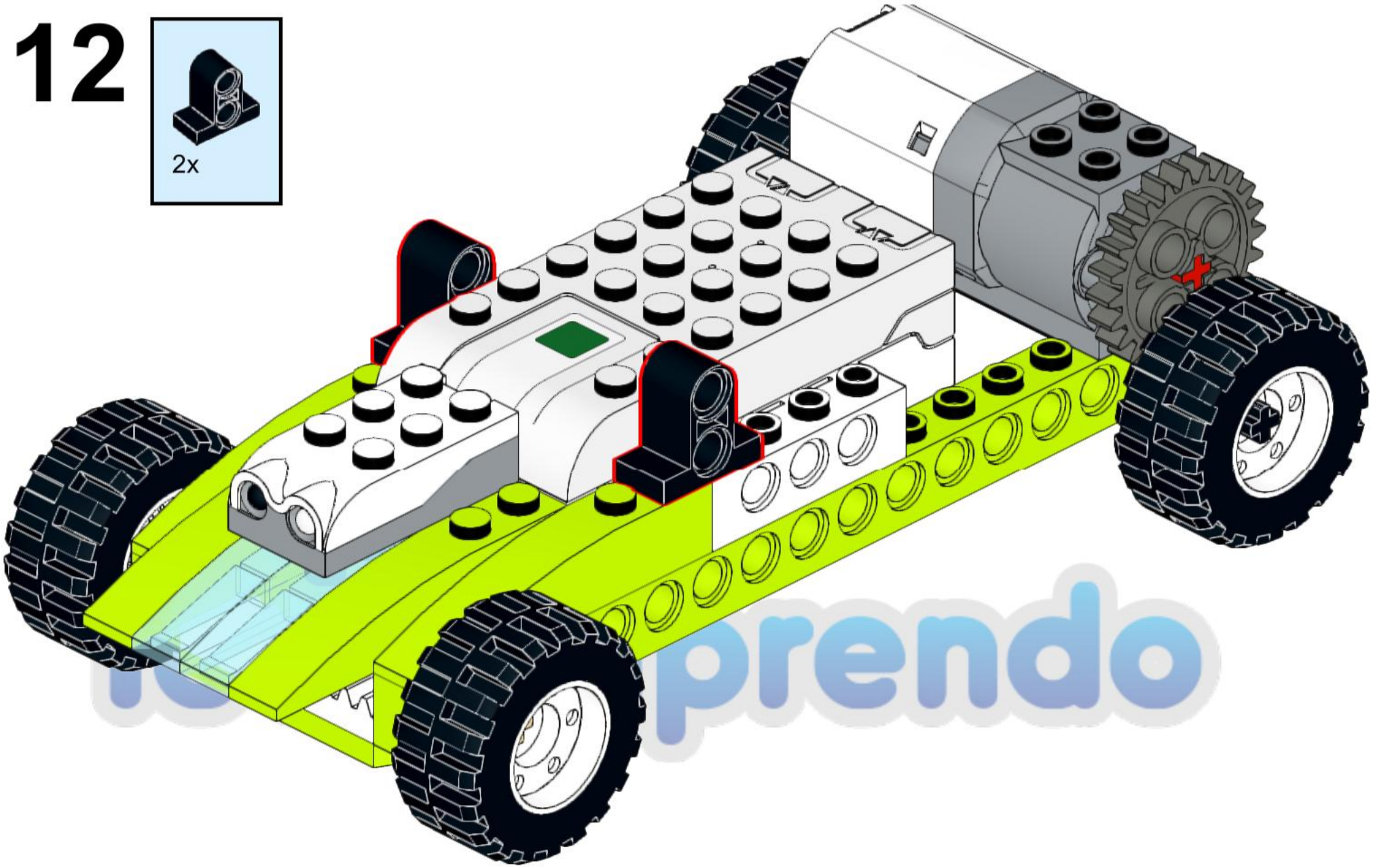

13

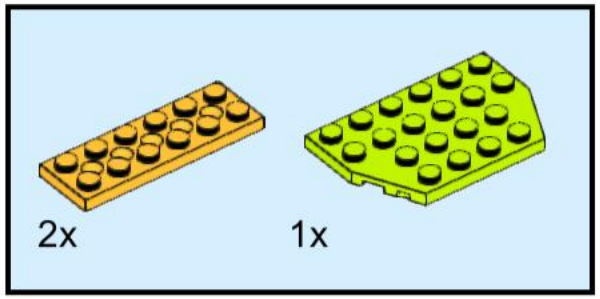

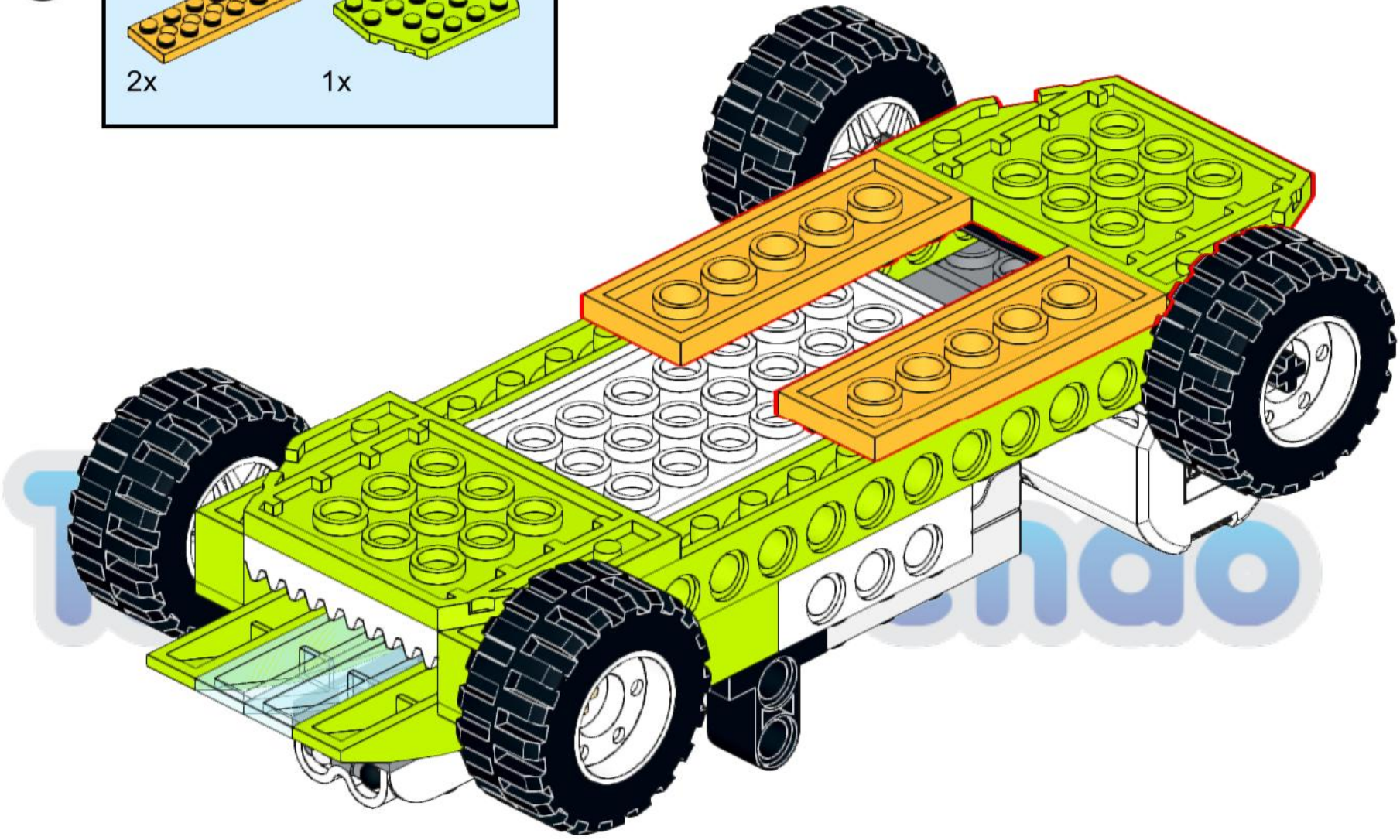

14

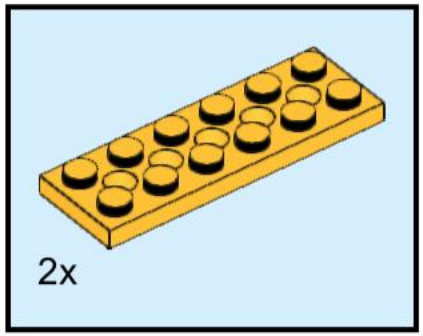

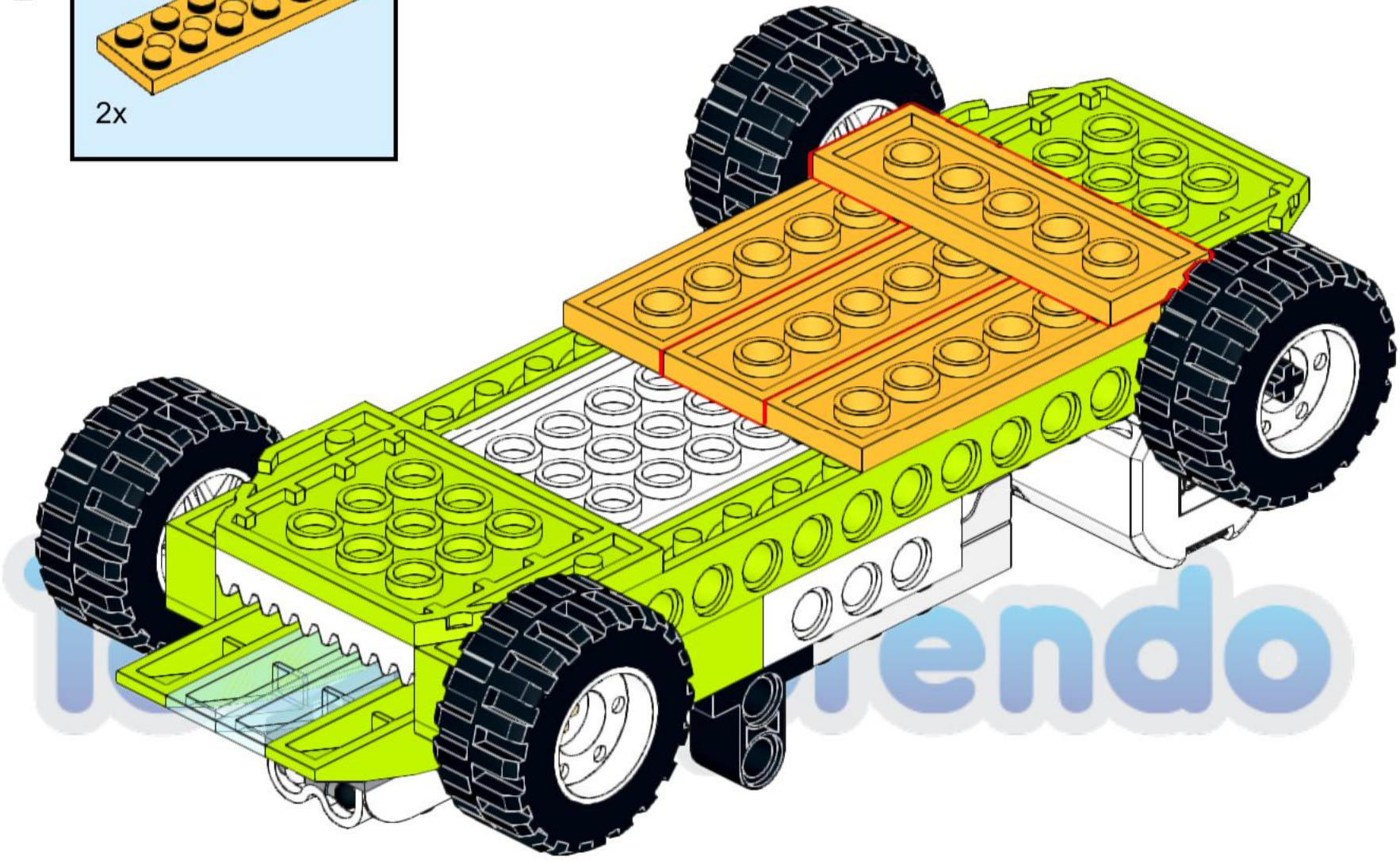

15

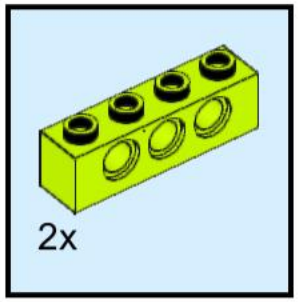

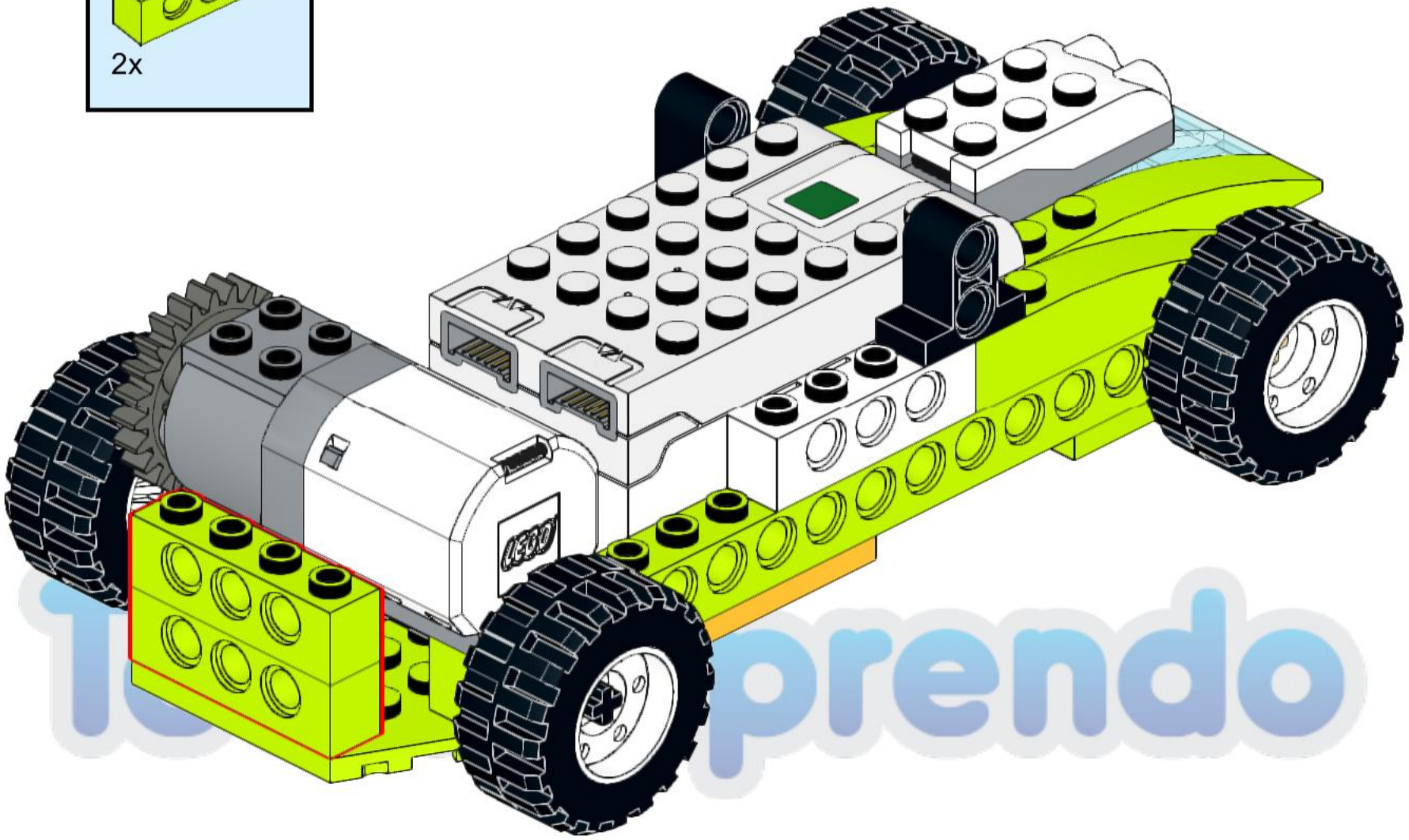

16

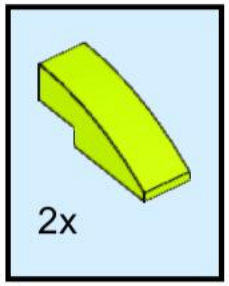

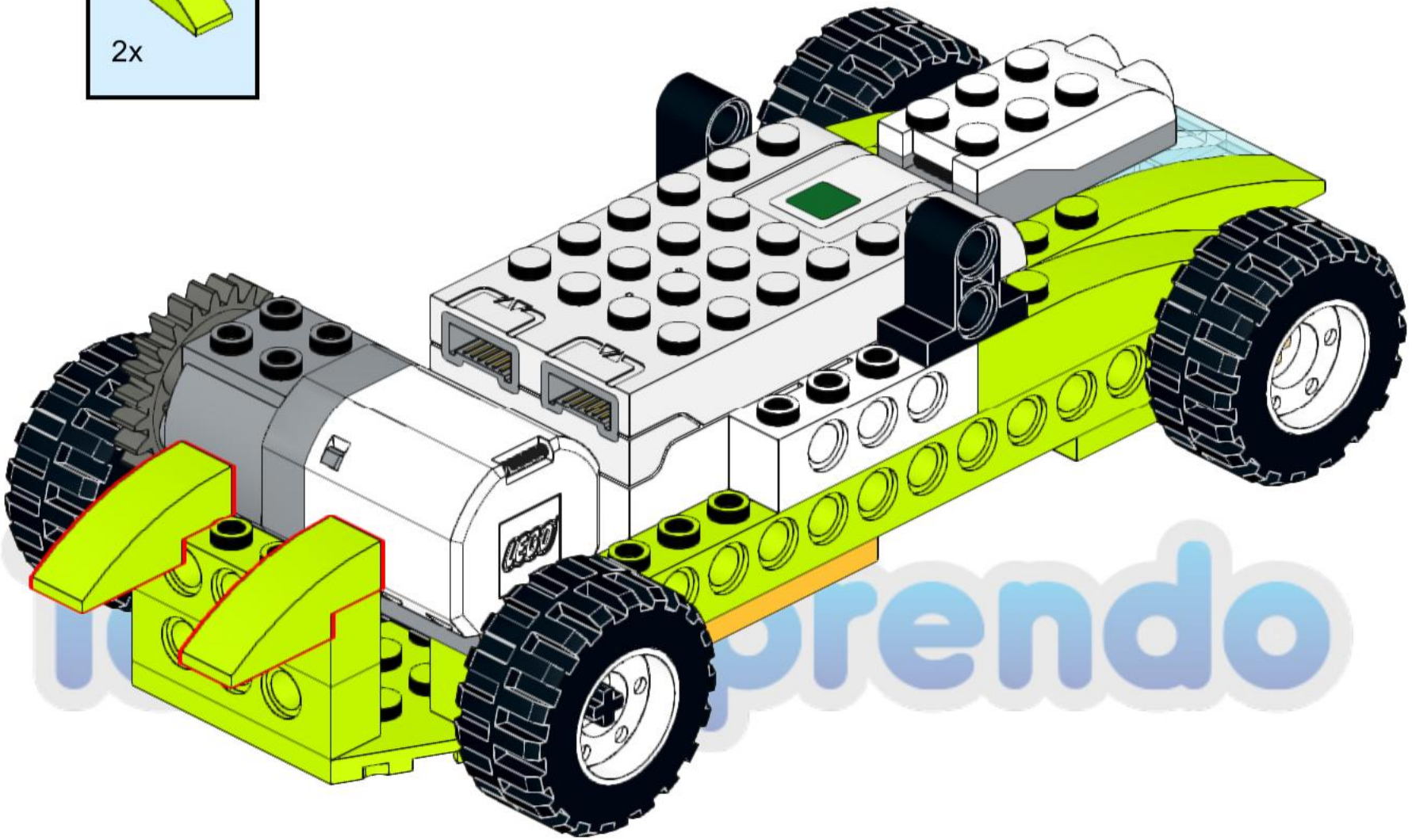

17

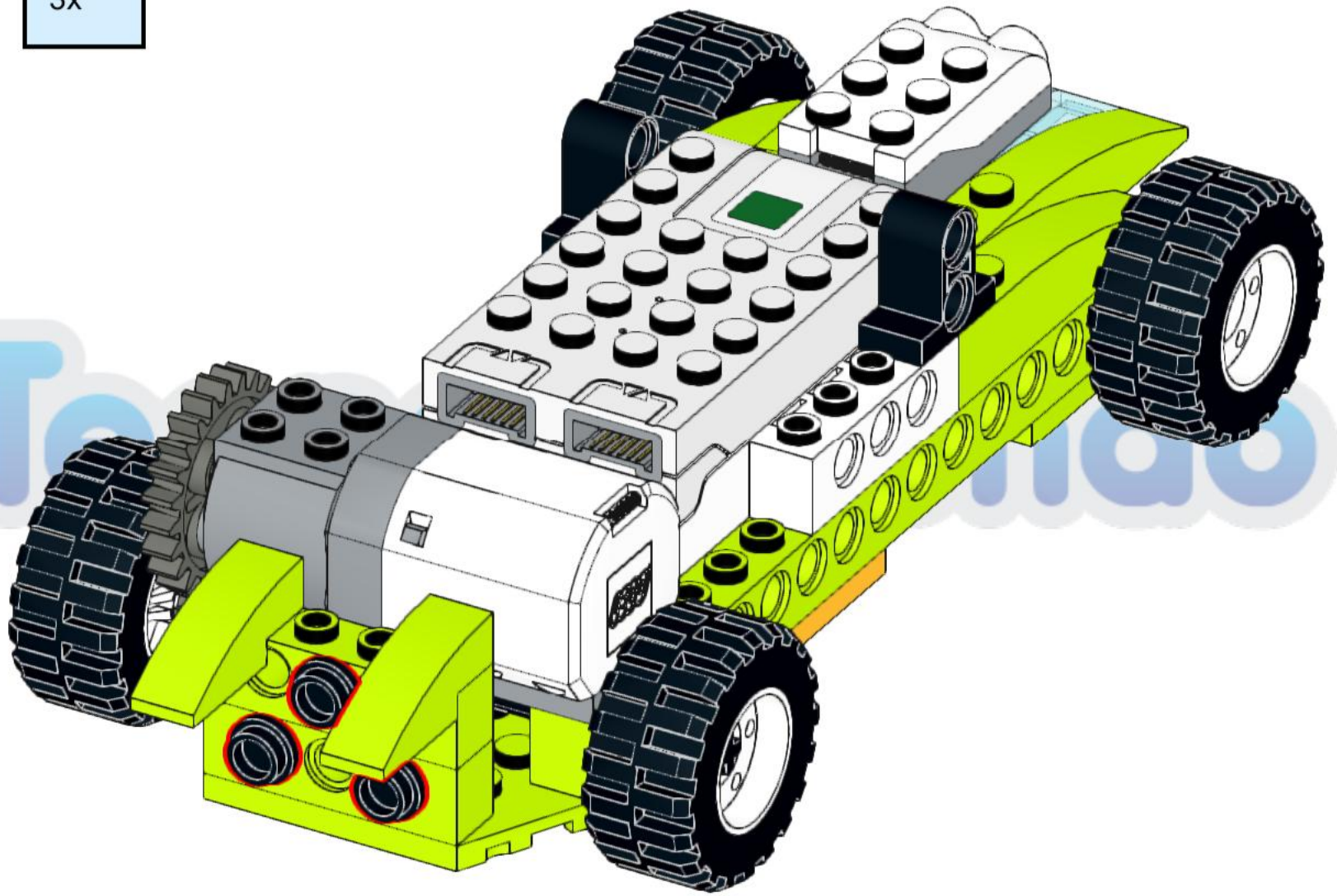

18

2x

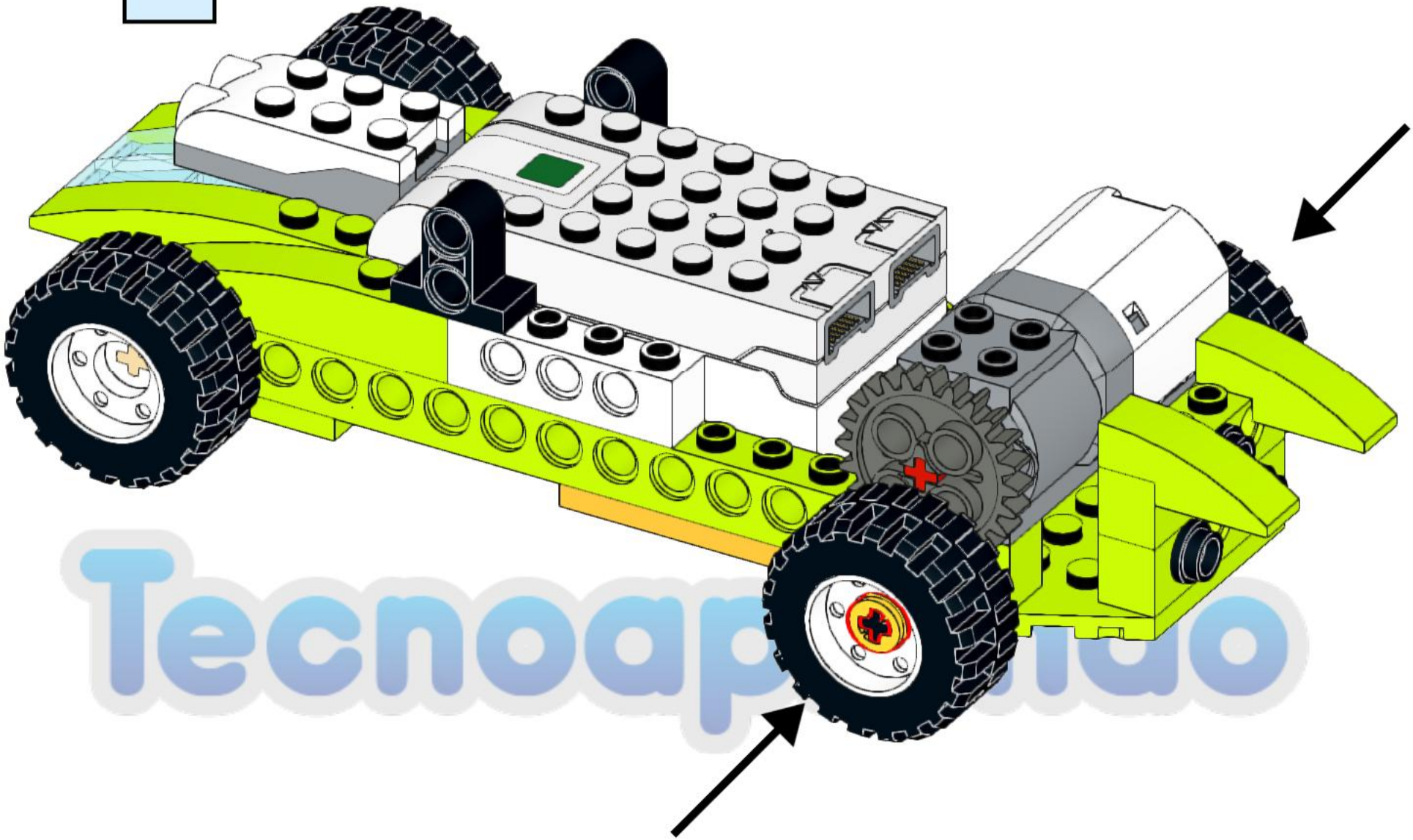

Tecnoapp Mundo

The speed of the car will be determined by the distance detected by the sensor

Tecnoaprendo

3x
4073, 11

2x
32530, 11

4x
92402, 11

1x
3737, 11

1x
10928, 85

1x
3648, 85

4x
55982, 1

1x
3743, 1

1x
20844, 1

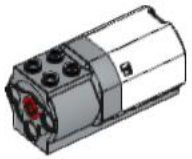

1x
21980, 1

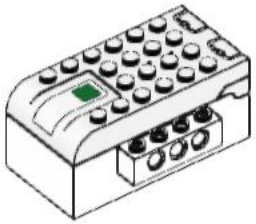

1x
19071c01, 1

1x
32062, 5

2x
3749, 2

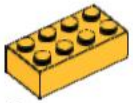

1x
3001, 110

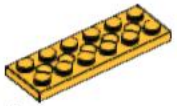

4x
32001, 110

2x
4265c, 3

2x
50950, 34

3x
3701, 34

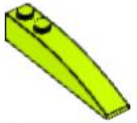

4x
42022, 34

2x
32059, 34

2x
3703, 34

2x
42022, 15

Academia creativa de tecnología

Tecnoaprendo