# Flying Bird

## Flying with Motor

Academia creativa de tecnología

Tecnoaprendo

**1**

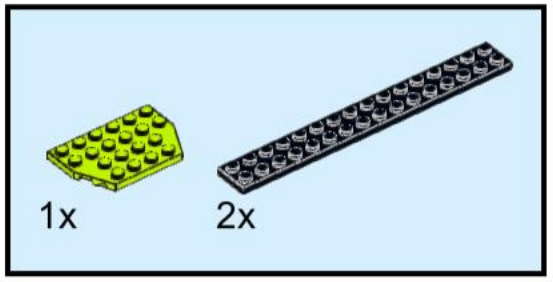


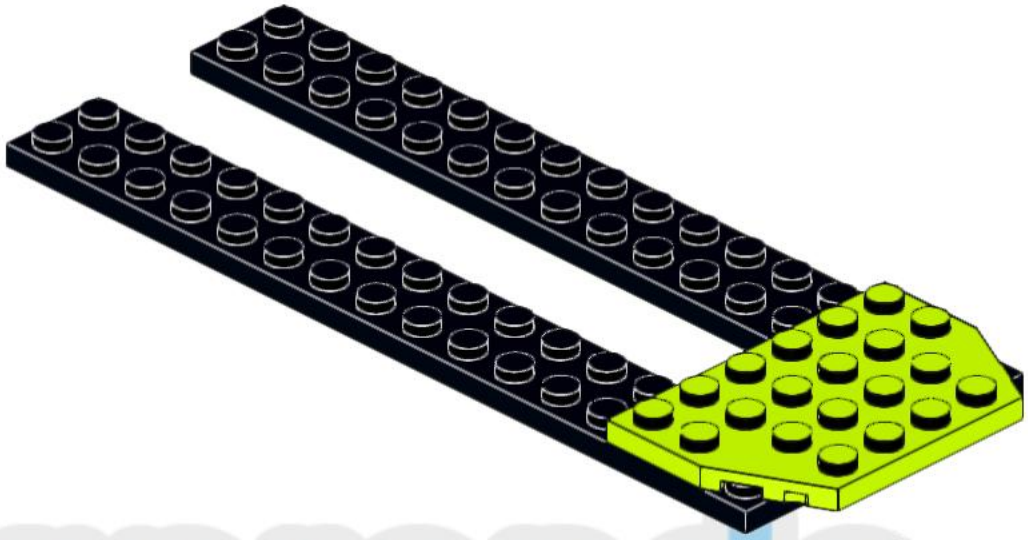

Tecnoaprendo

**2**

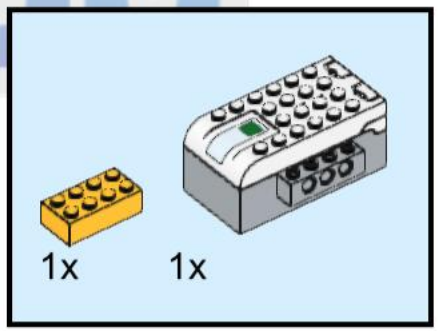


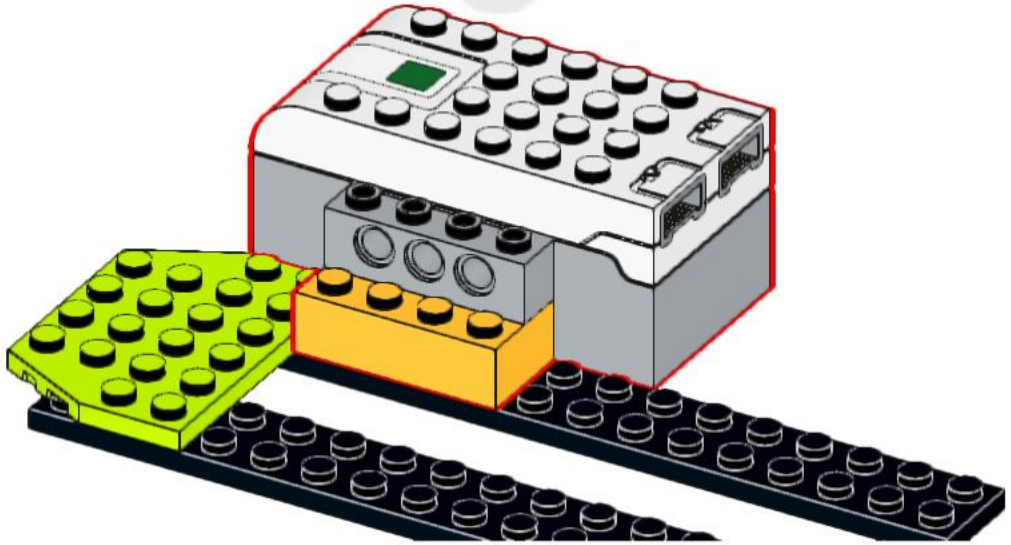

# 3

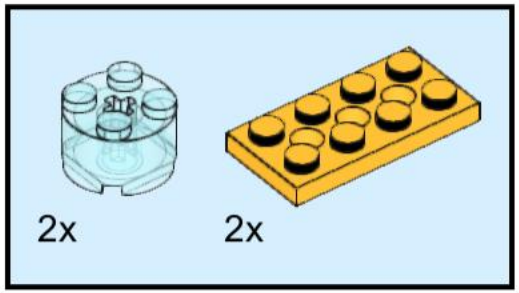


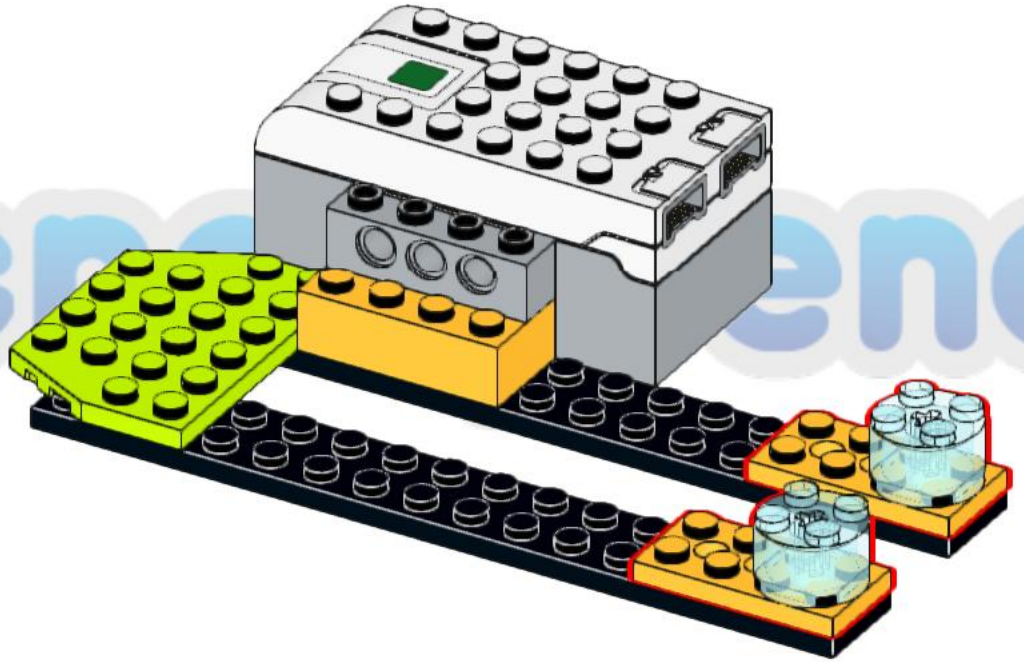

# 4

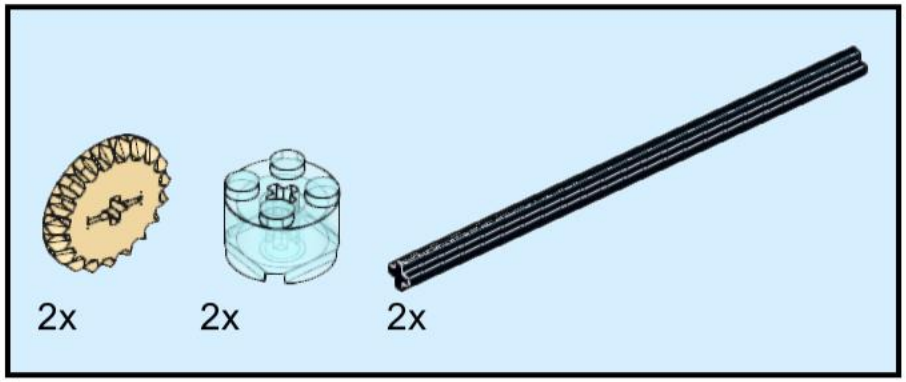


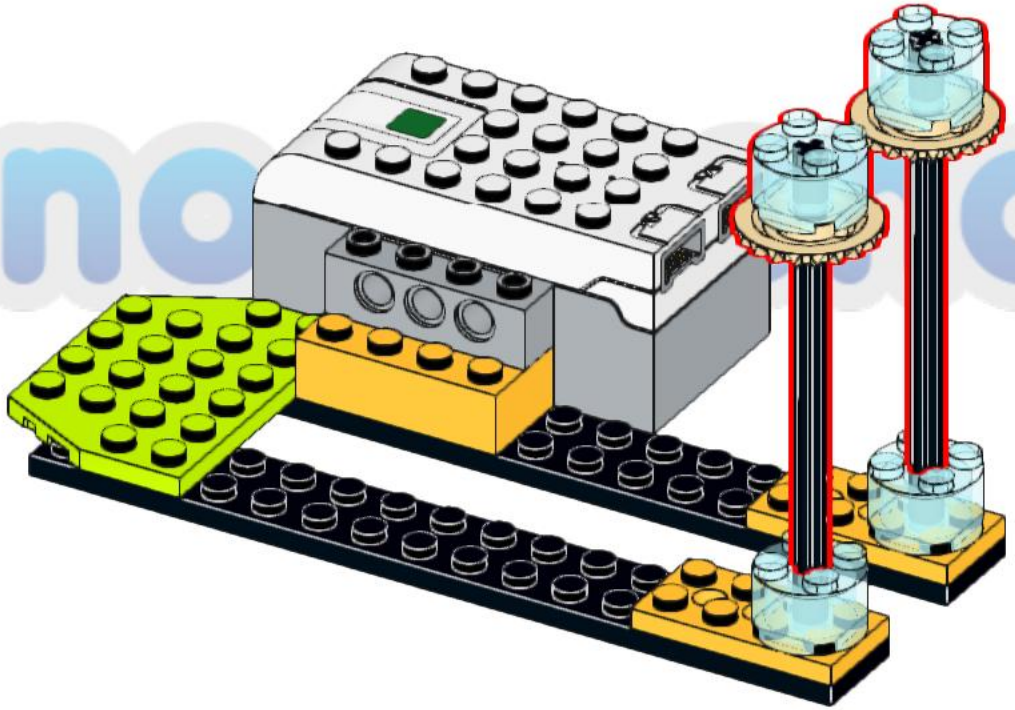

# 5

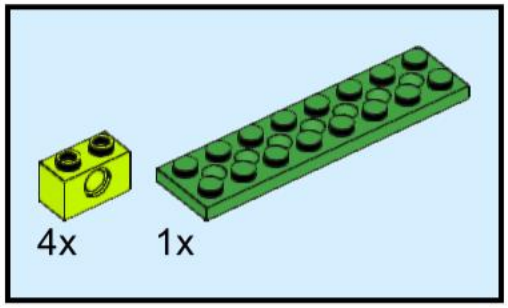


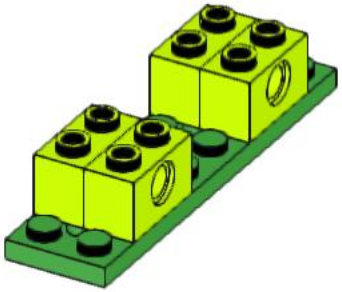

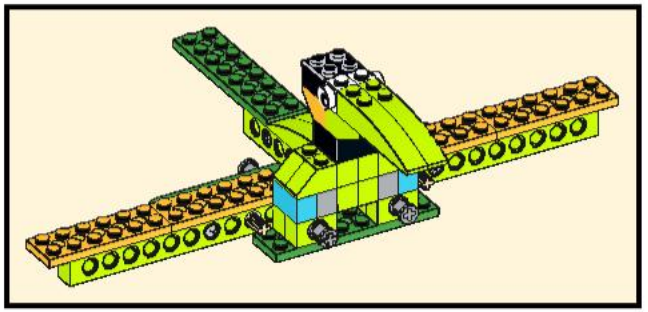

Tecnoaprendo

# 6

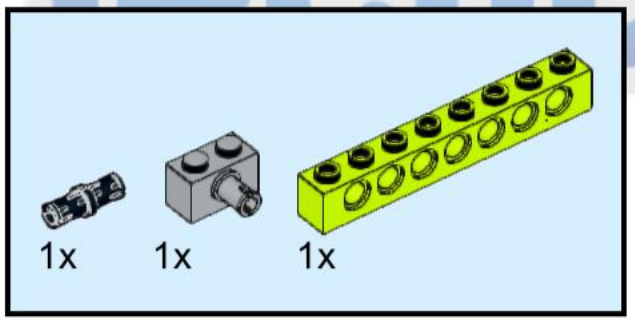


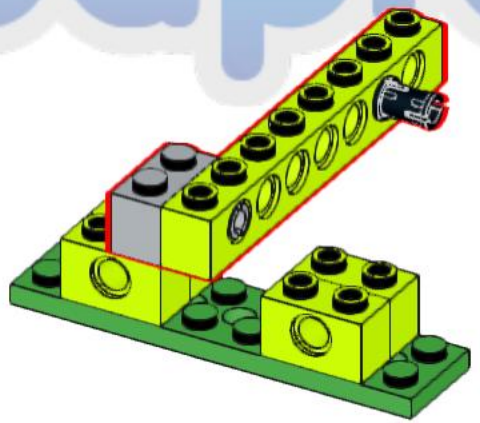

# 7

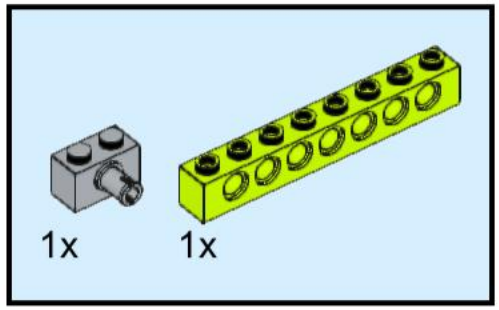


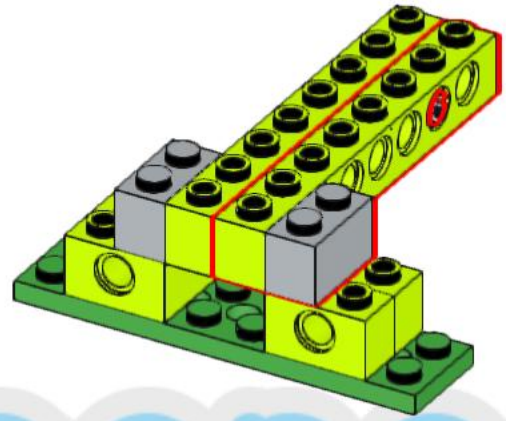

Tecnoaprendo

# 8

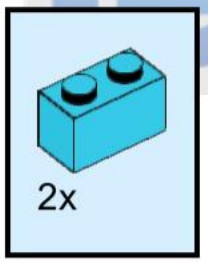


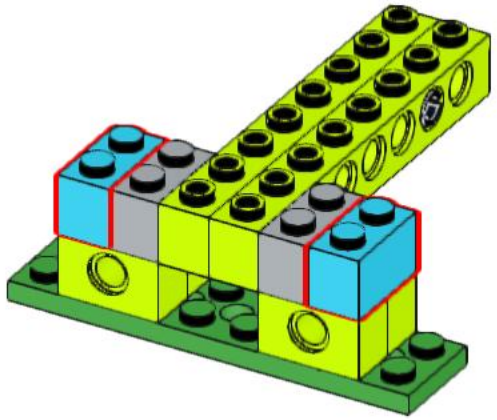

**9**

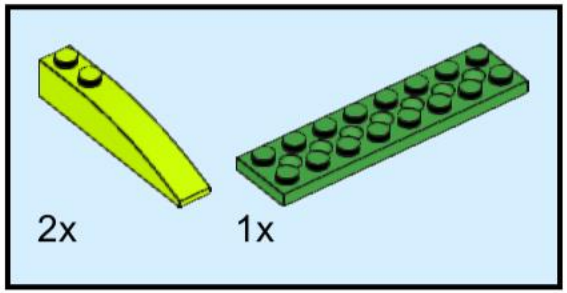


**10**

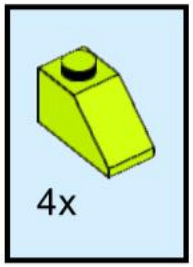


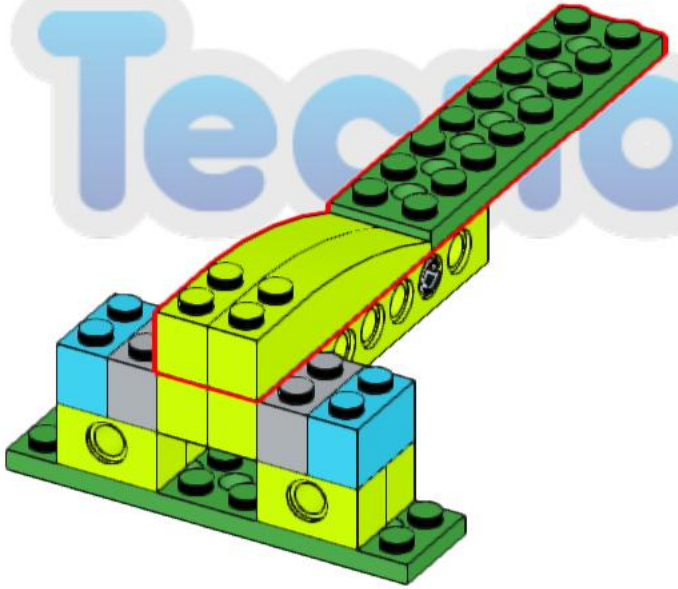

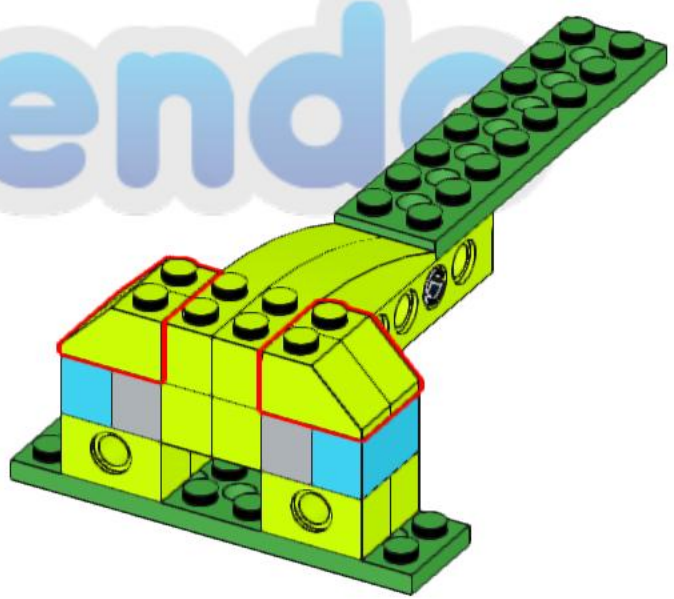

# 11

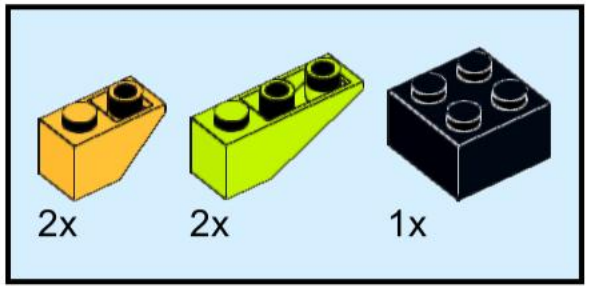


# 12

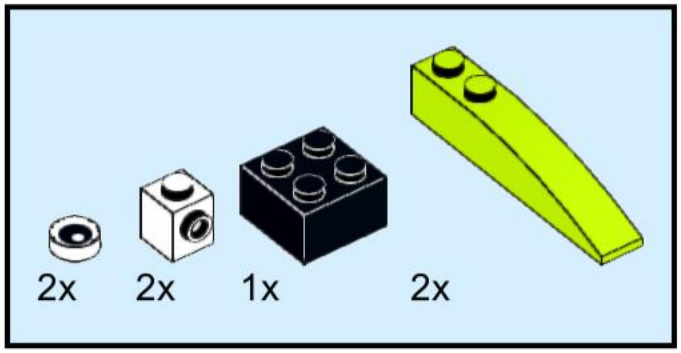


Tecnoaprendo

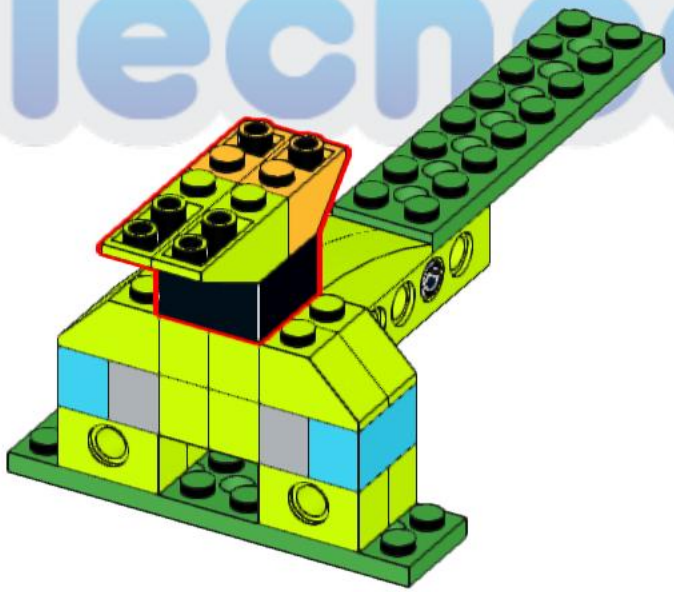

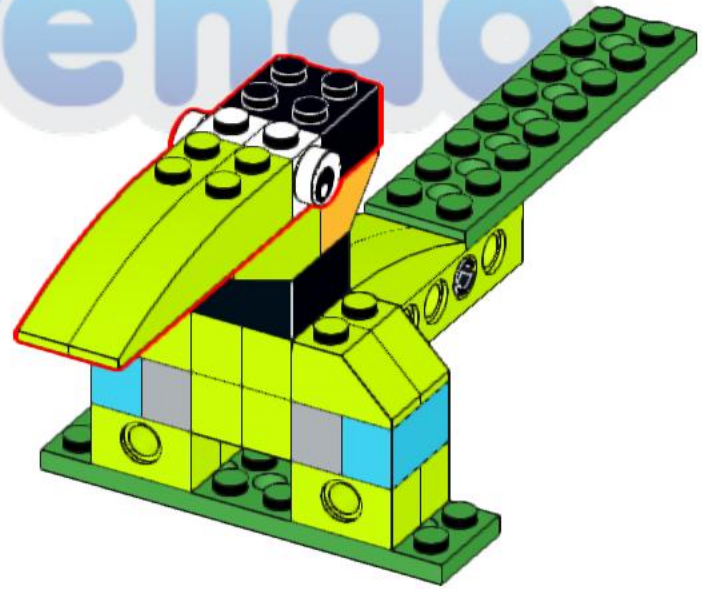

# 13

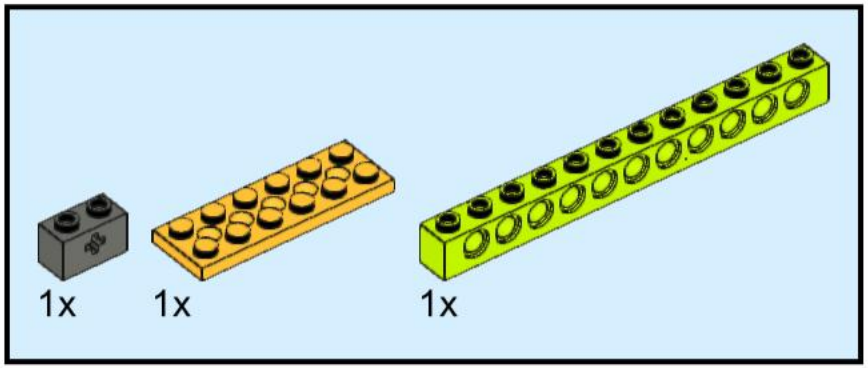


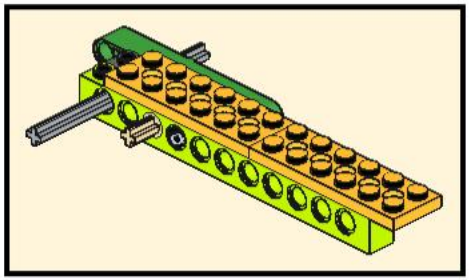

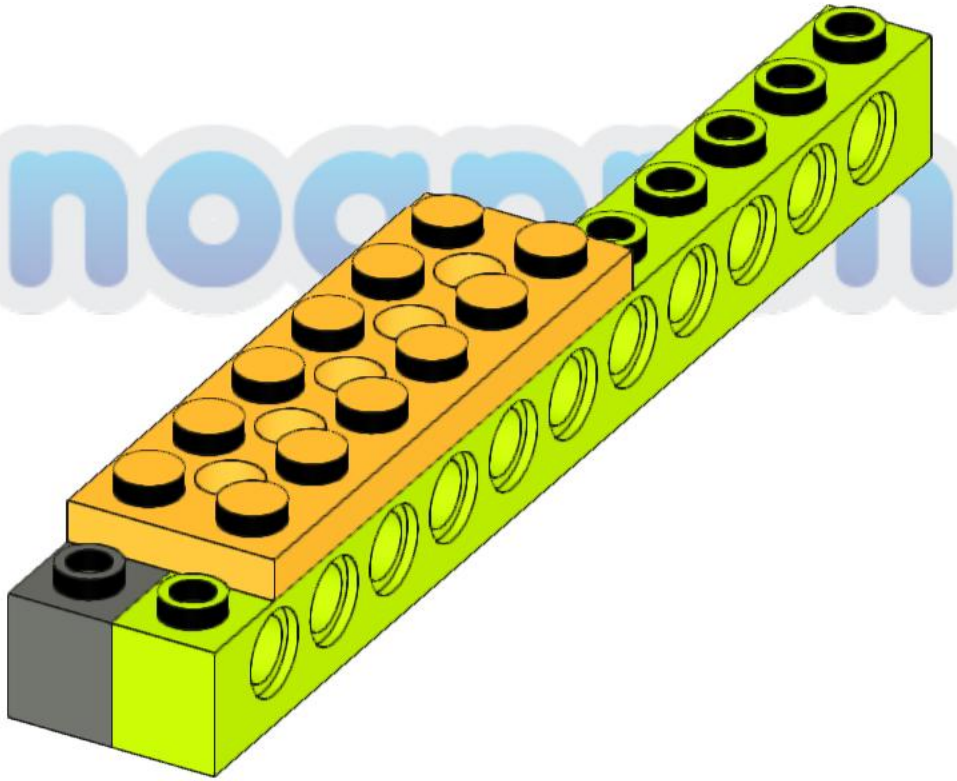

Tecnoaprendo

# 14

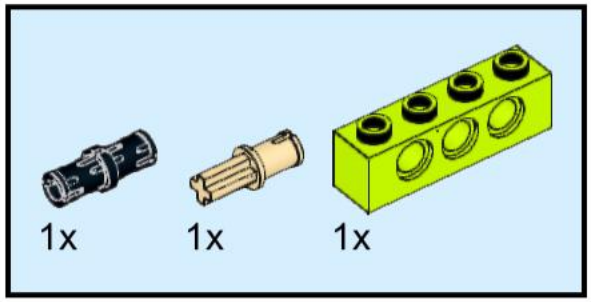


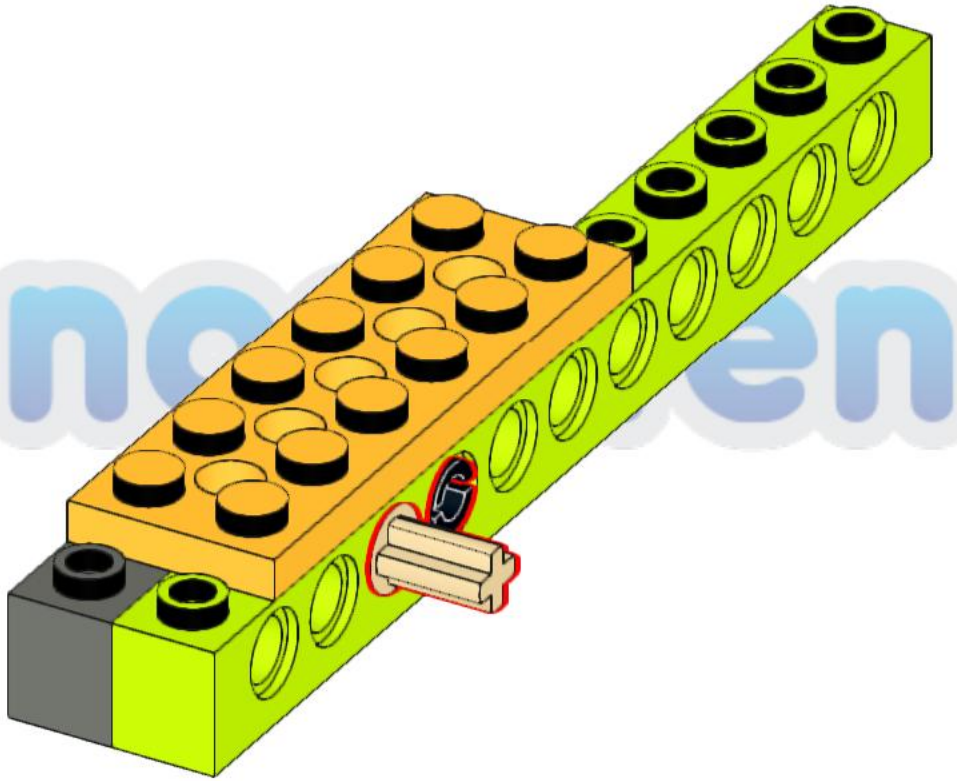

Tecnobrendo

# 15

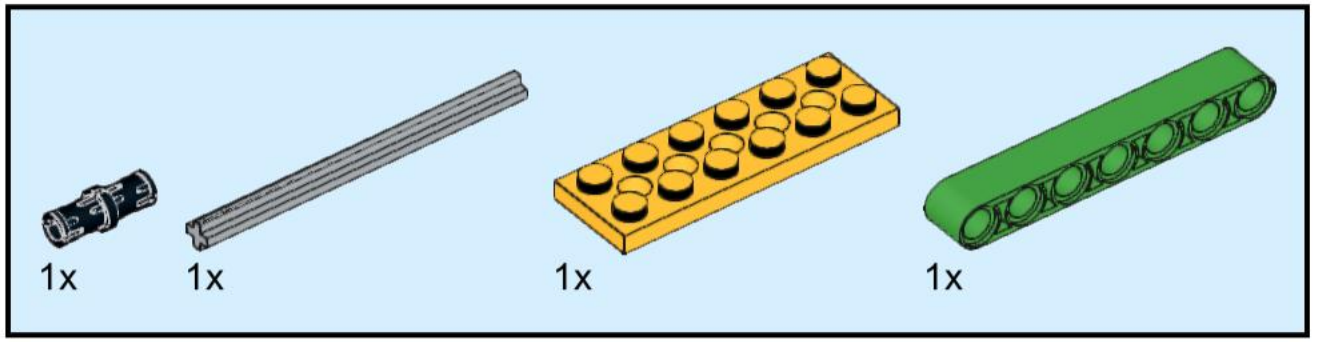


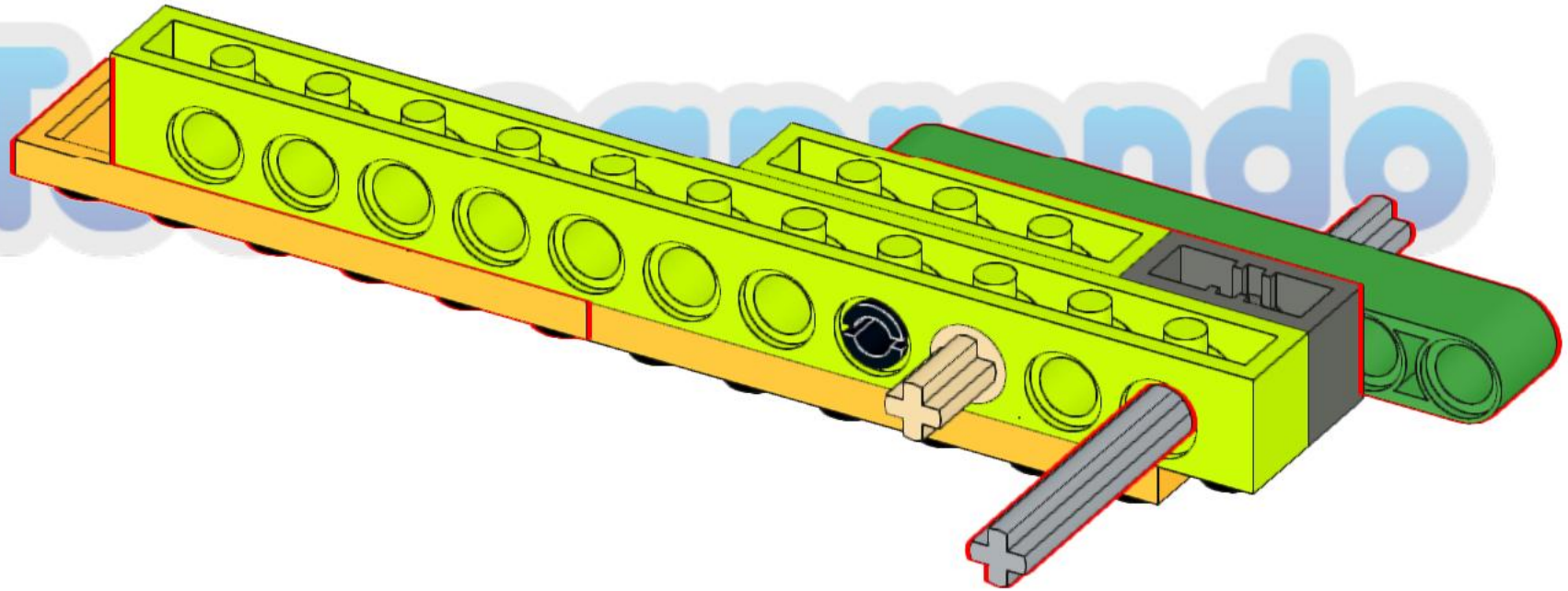

16

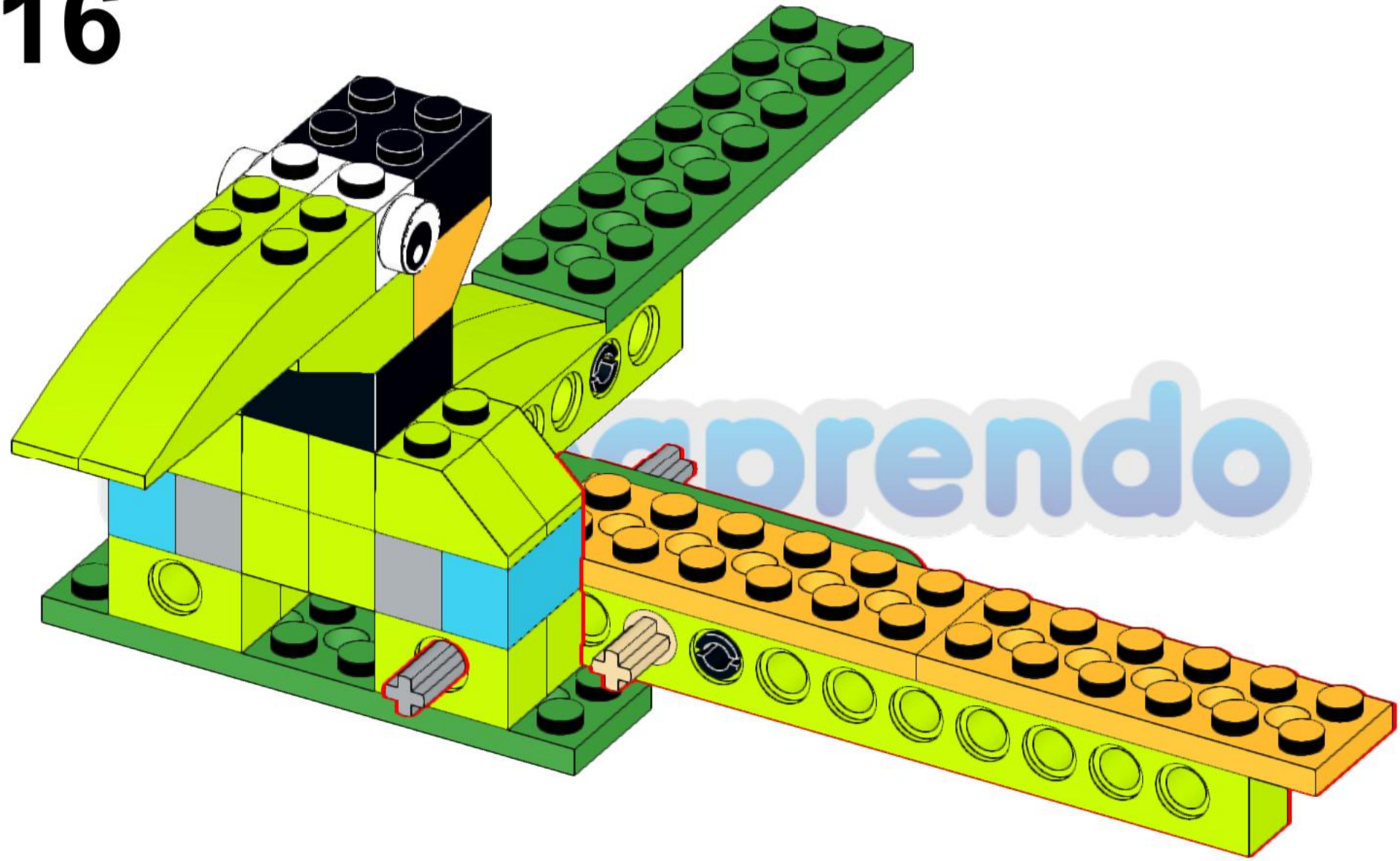

# 17

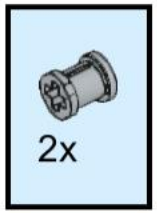


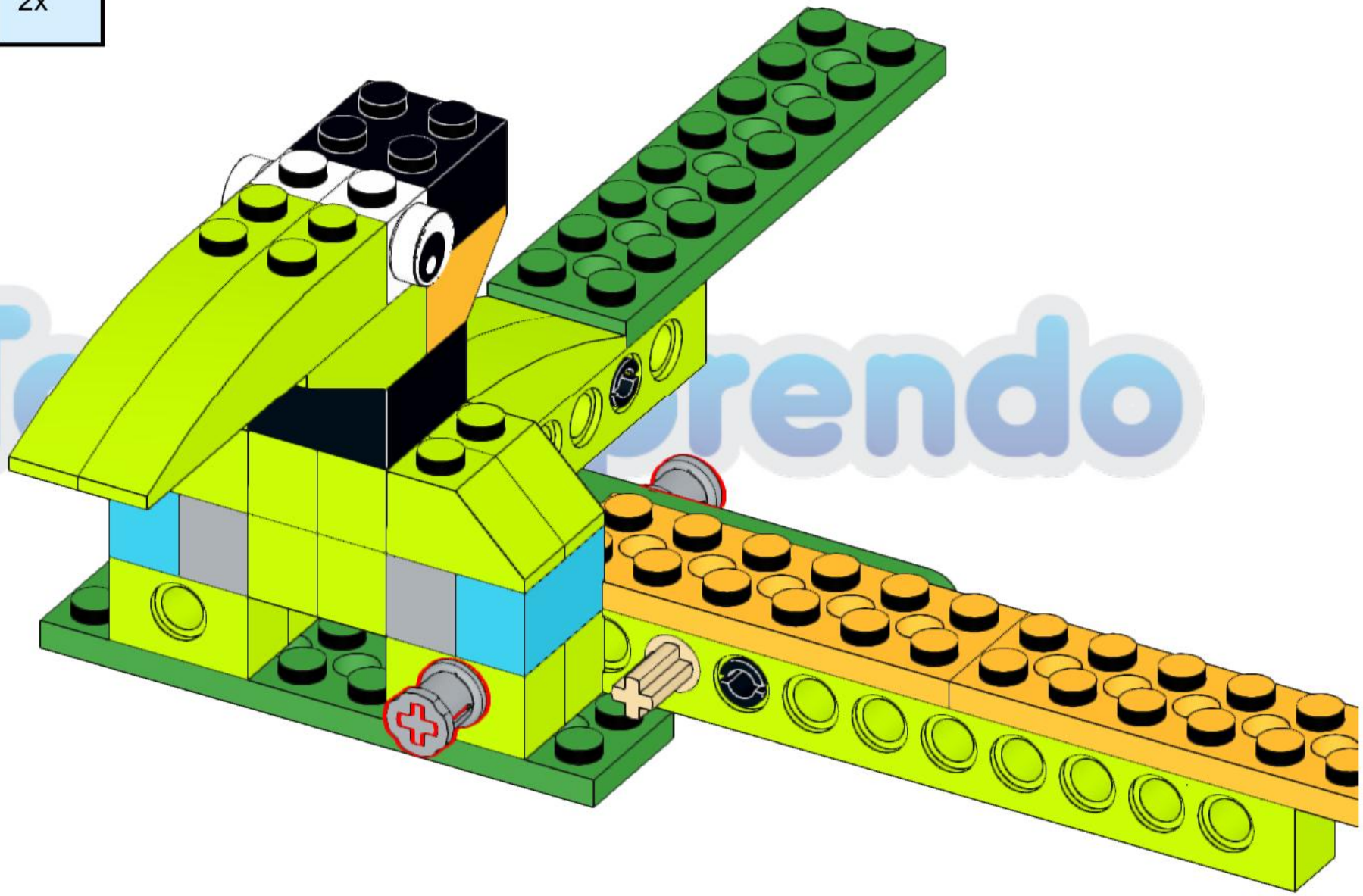

# 18

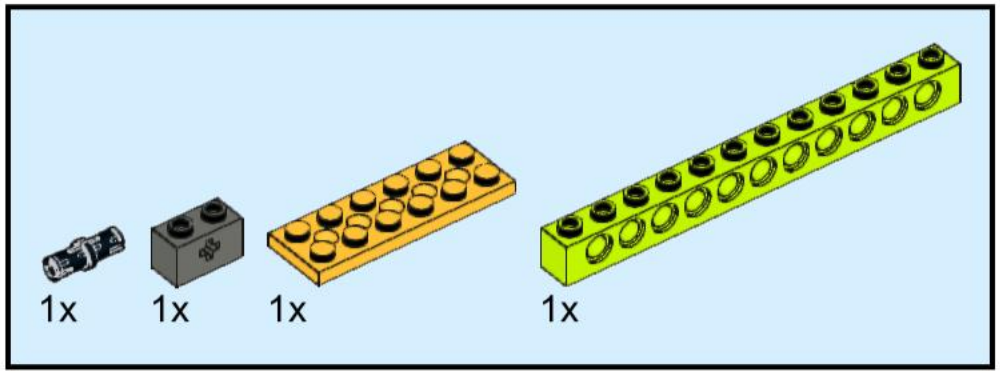


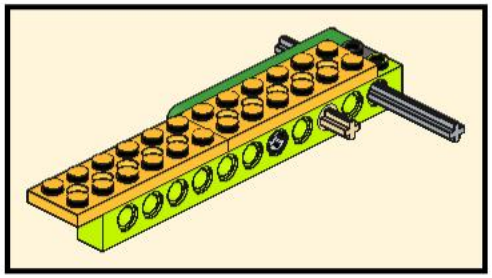

Tecnoaprendo

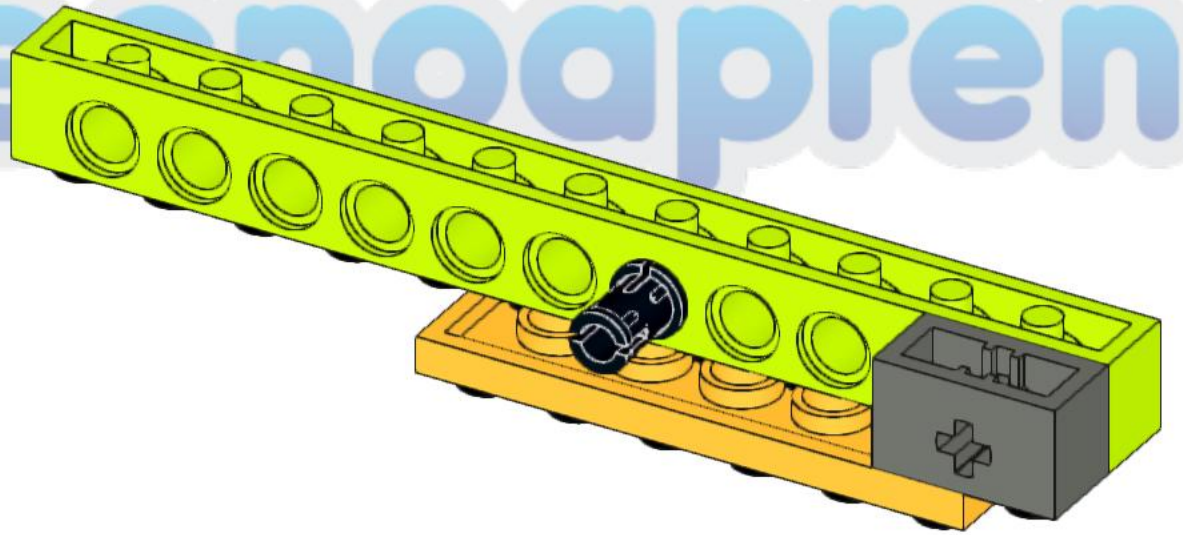

# 19

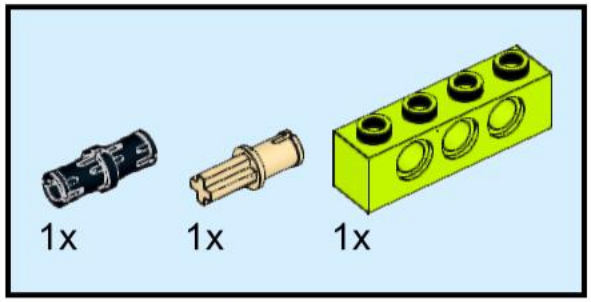


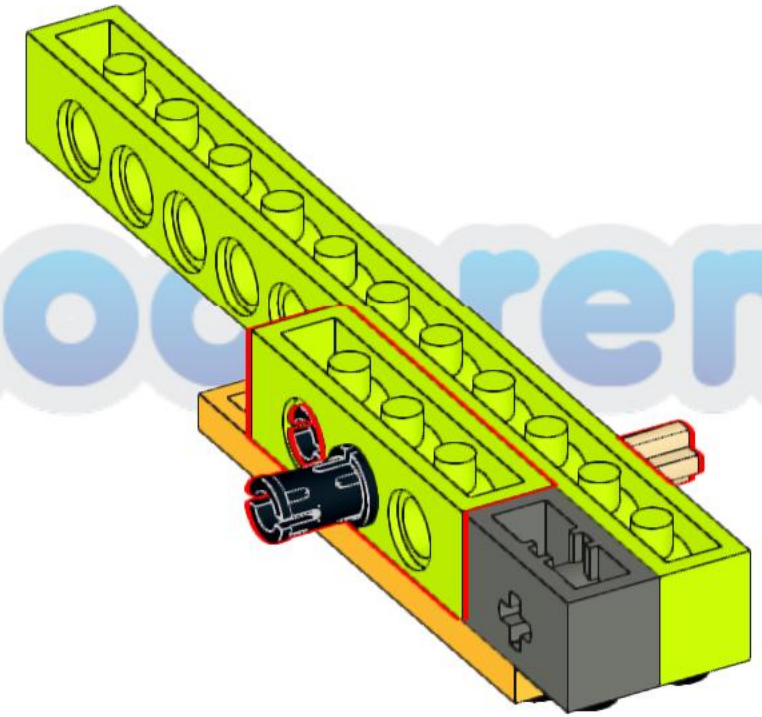

Tecnoapprendo

# 20

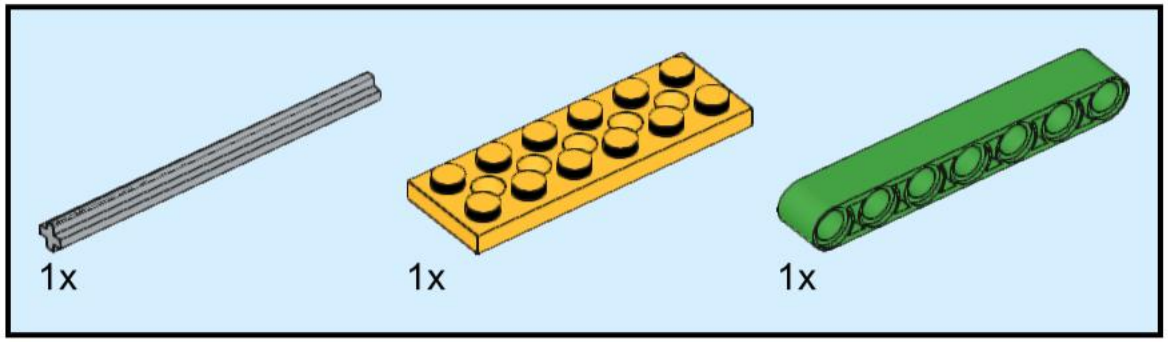


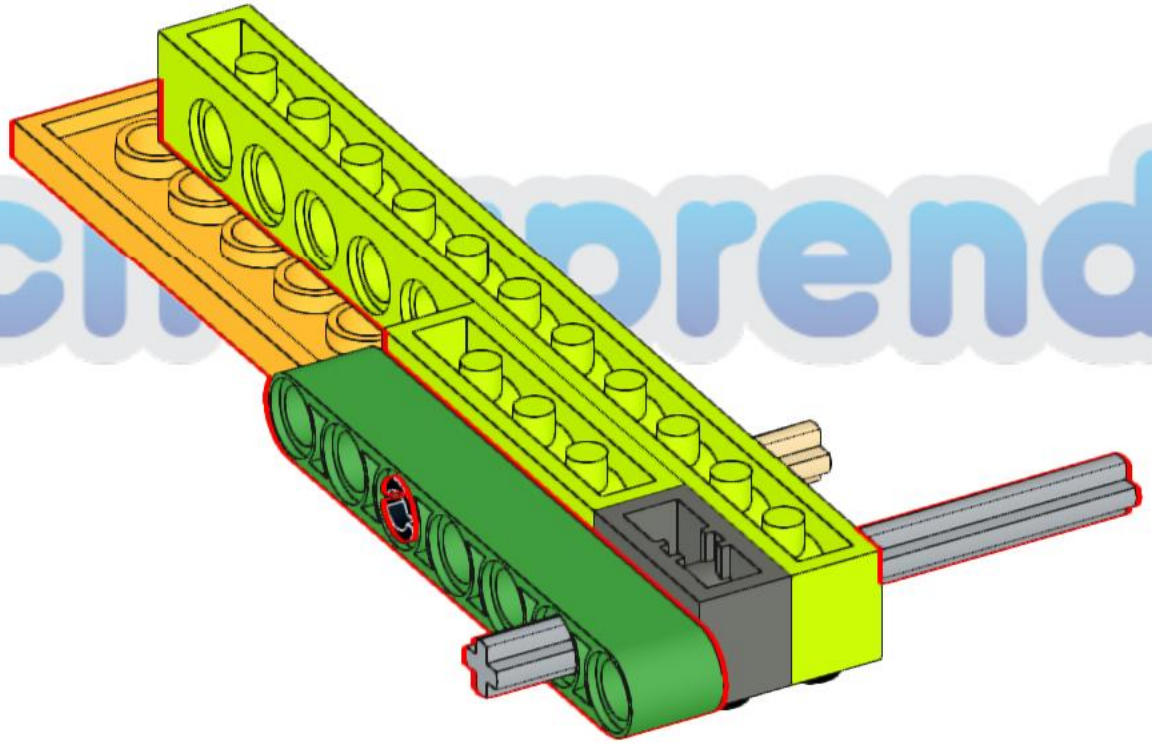

# 21

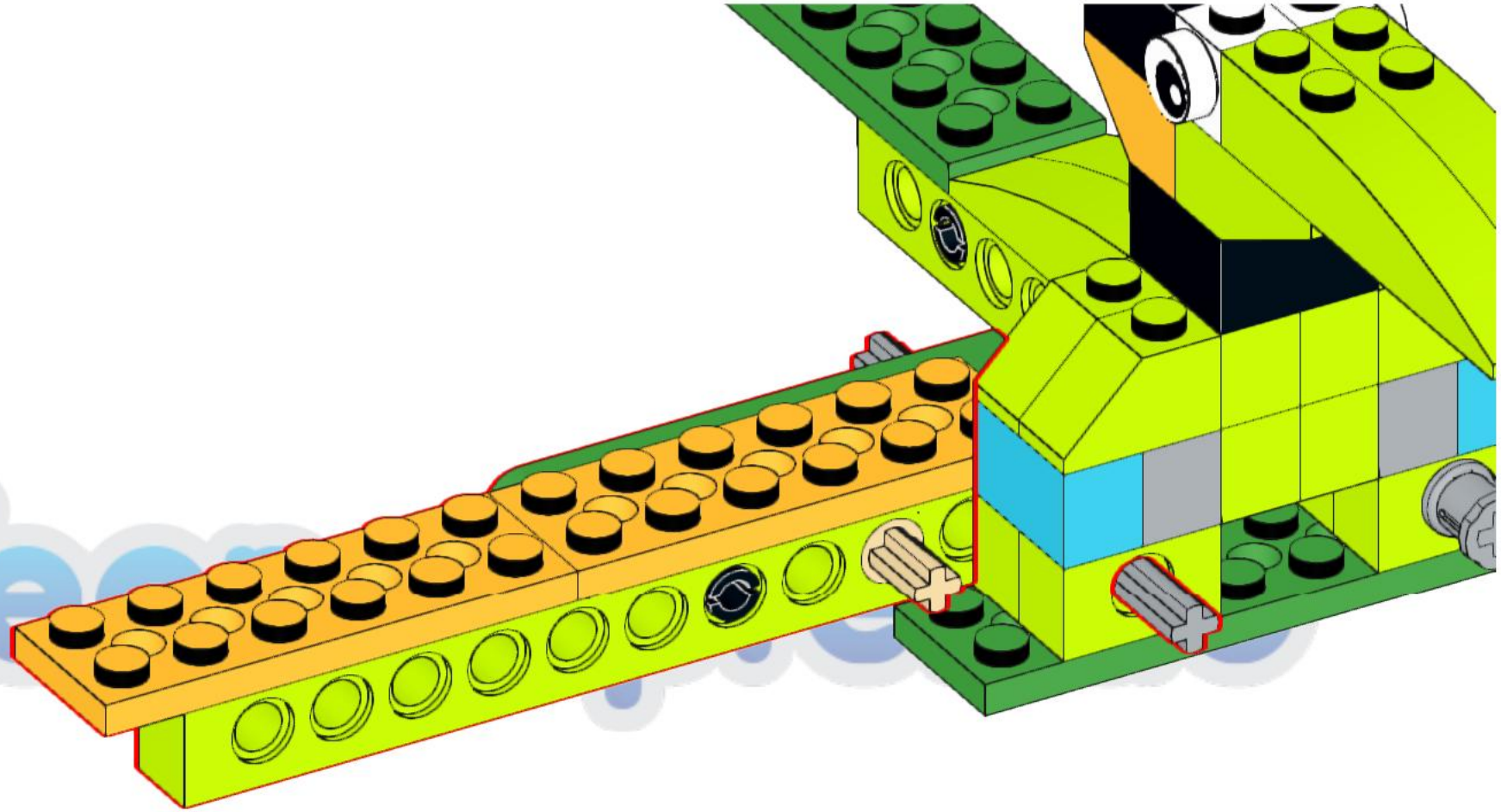

# 22




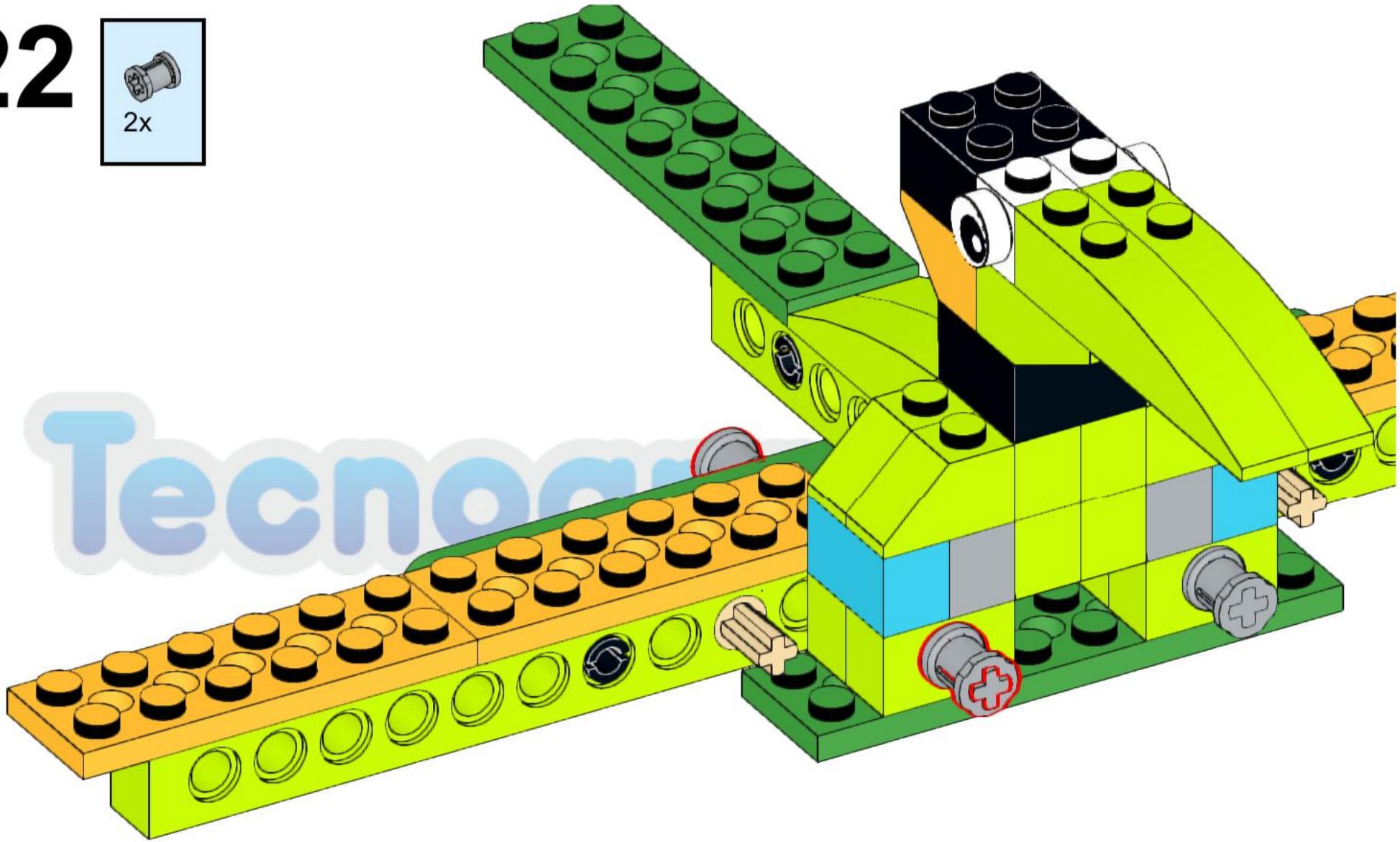

# 23

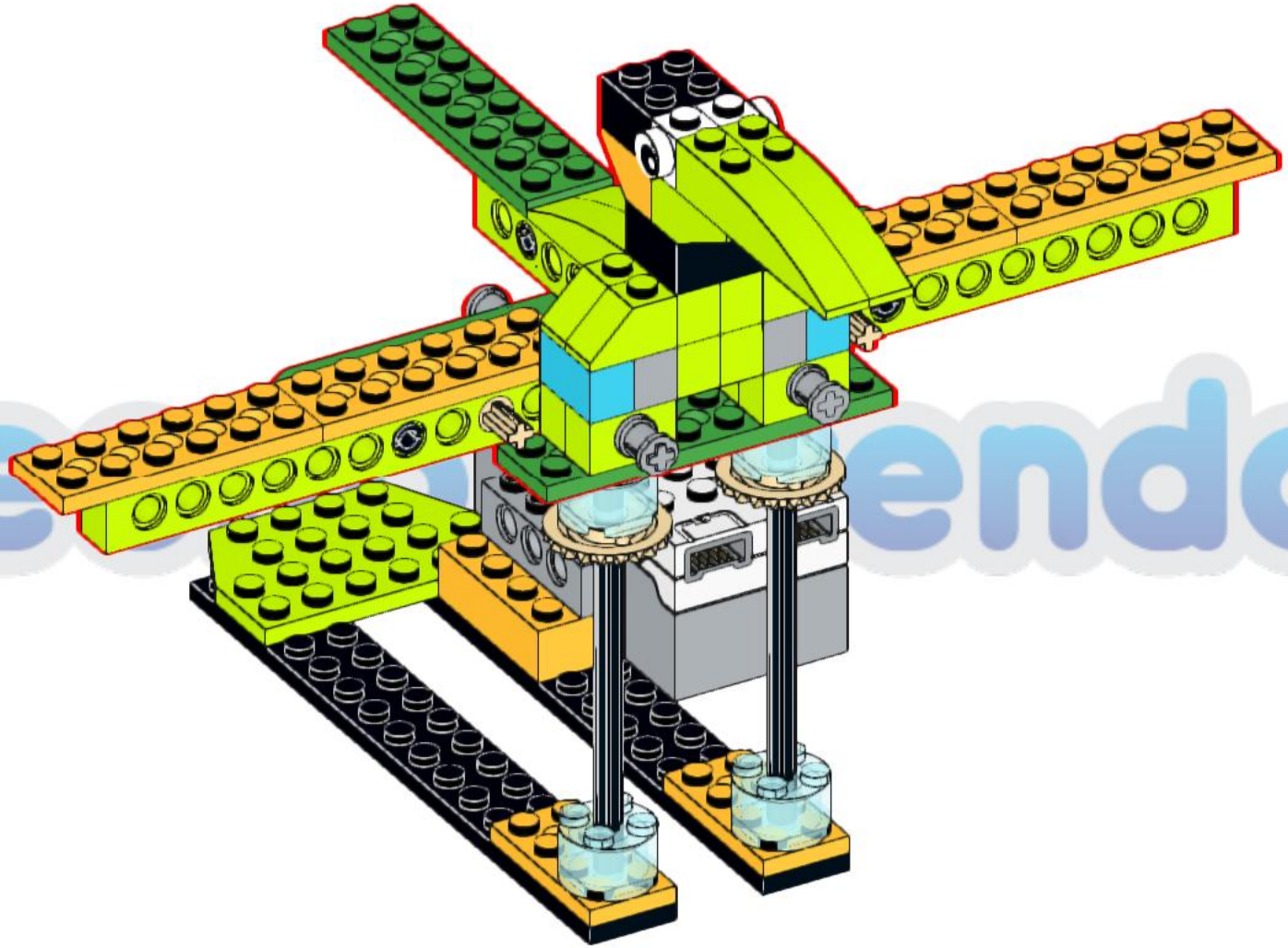

# 24

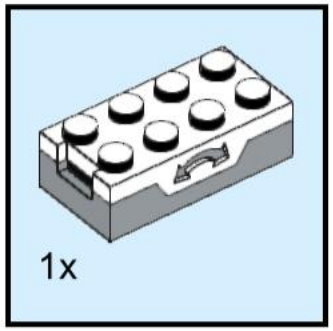


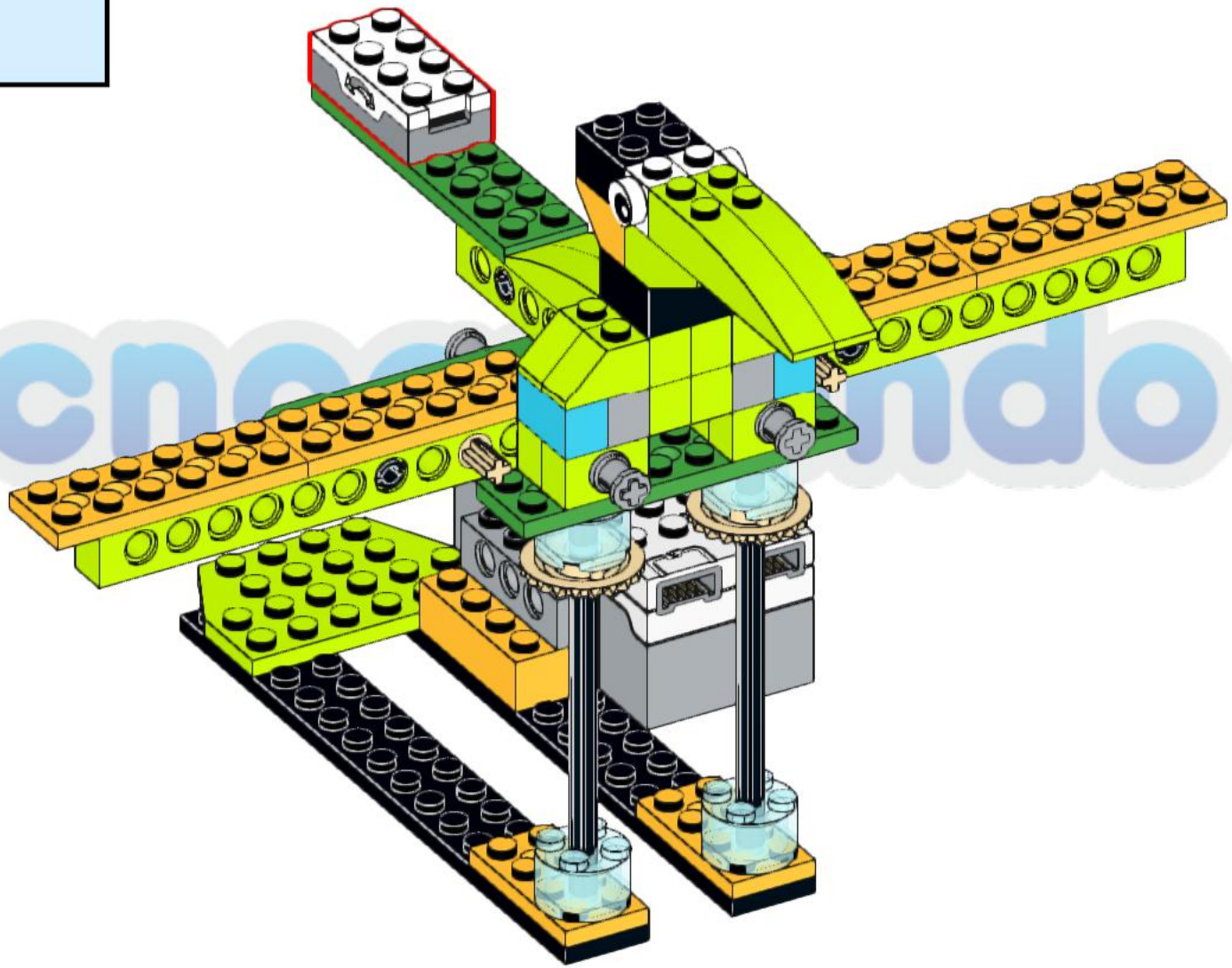

Make it fly with your hands moving the tail up and down

tecnoaprendo

Make it fly by
adding a motor

Academia creativa de tecnología

# Tecnoaprendo

# 25

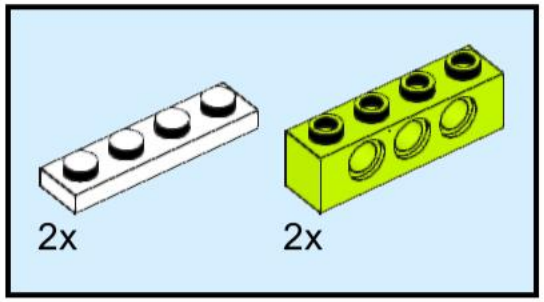


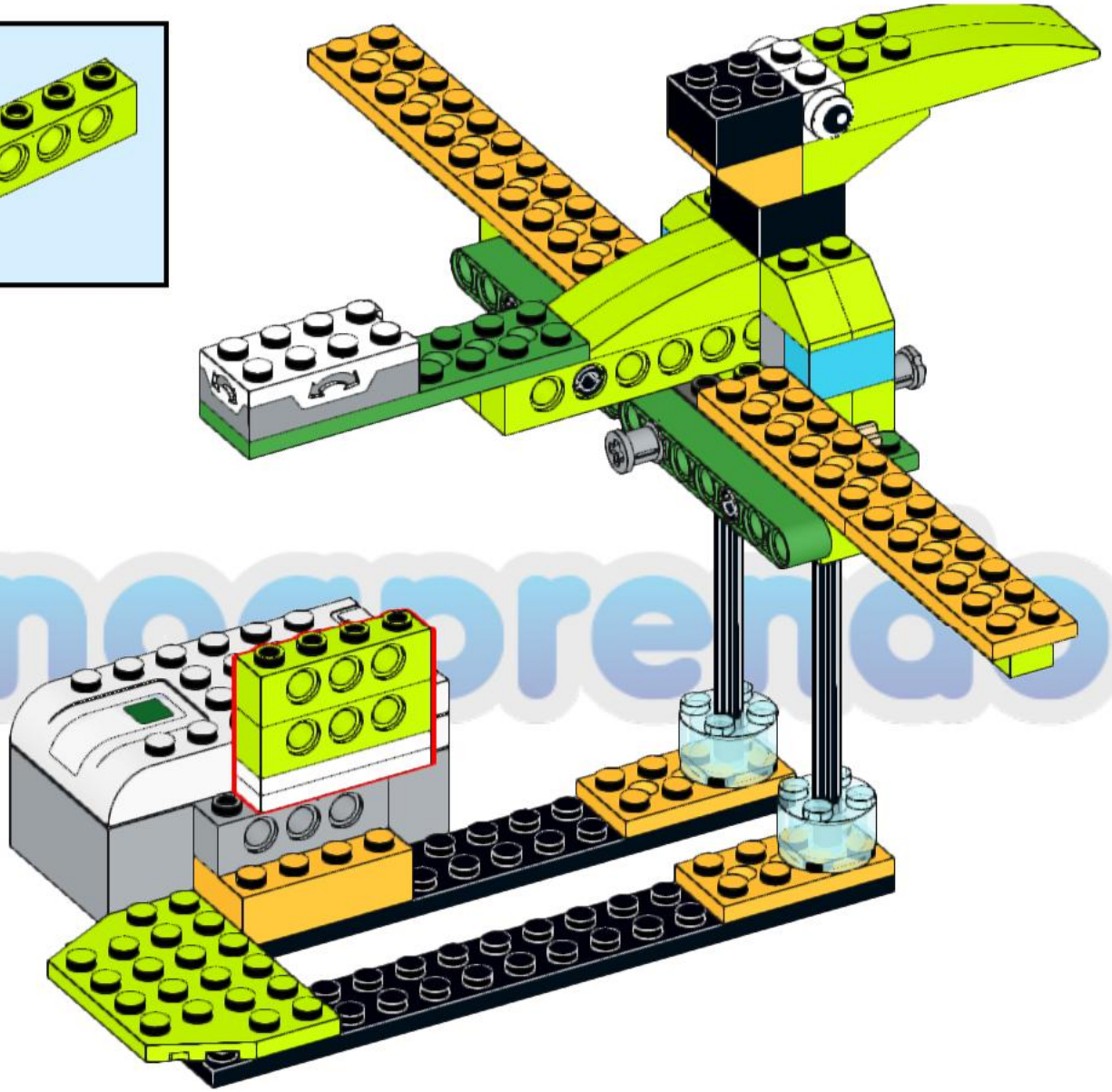

Tecnoaprendo

# 26

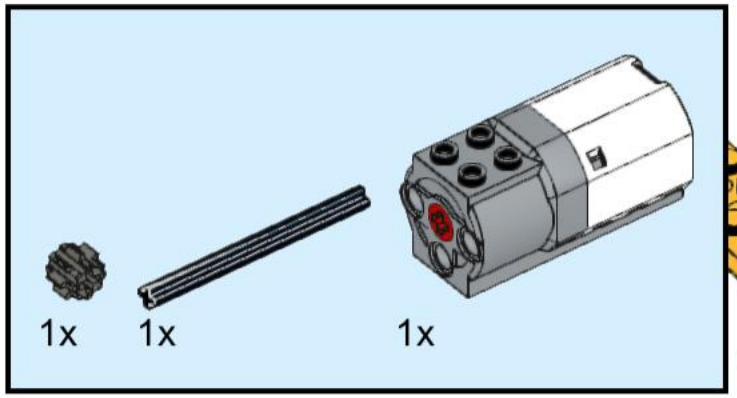


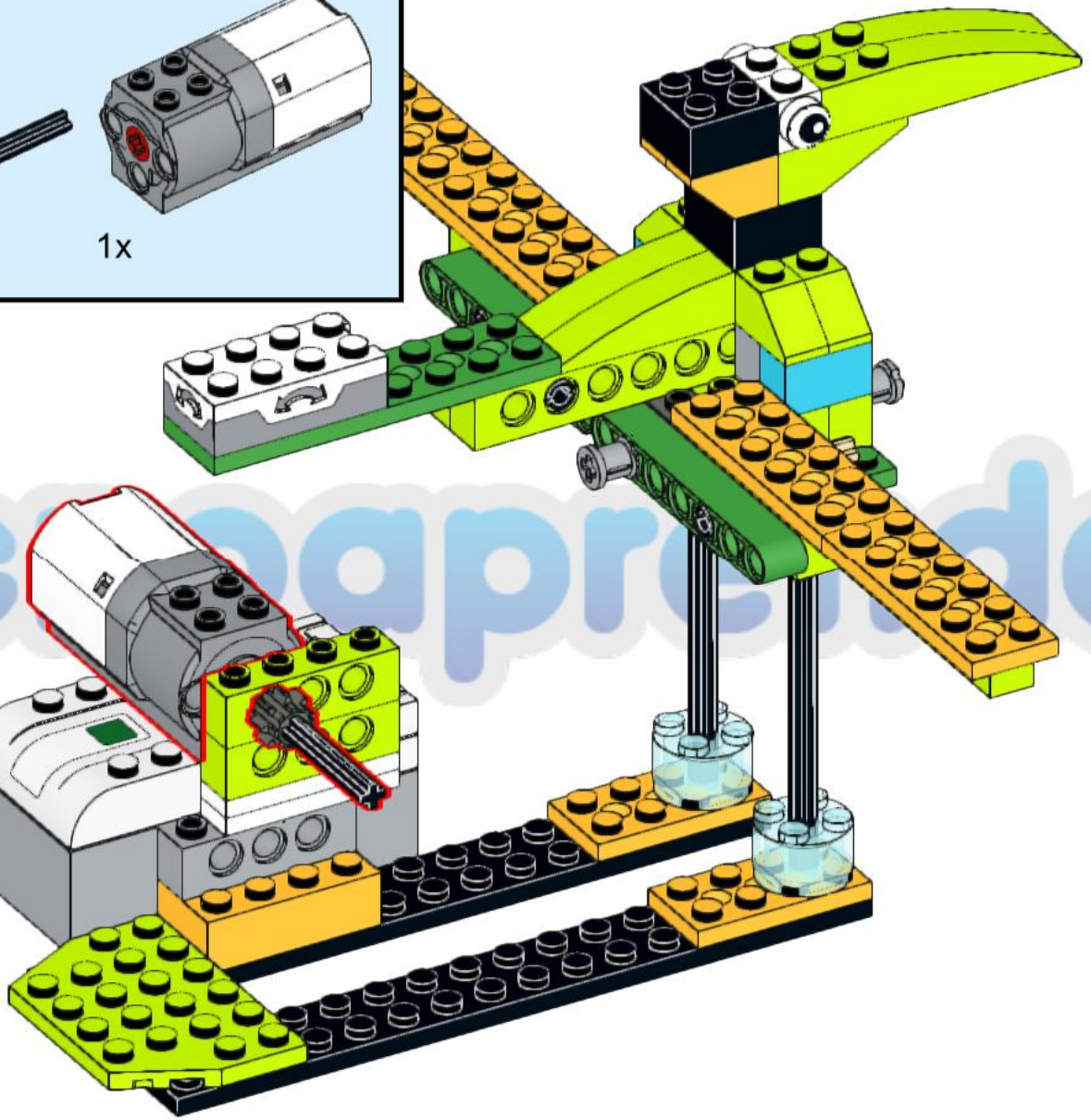

Tecnoaprendo

# 27

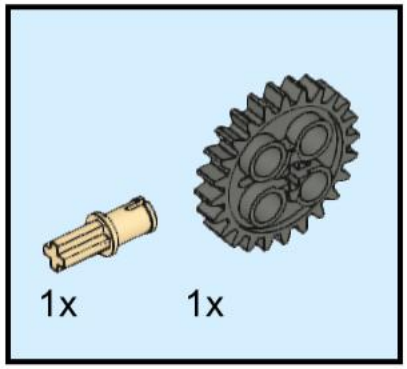


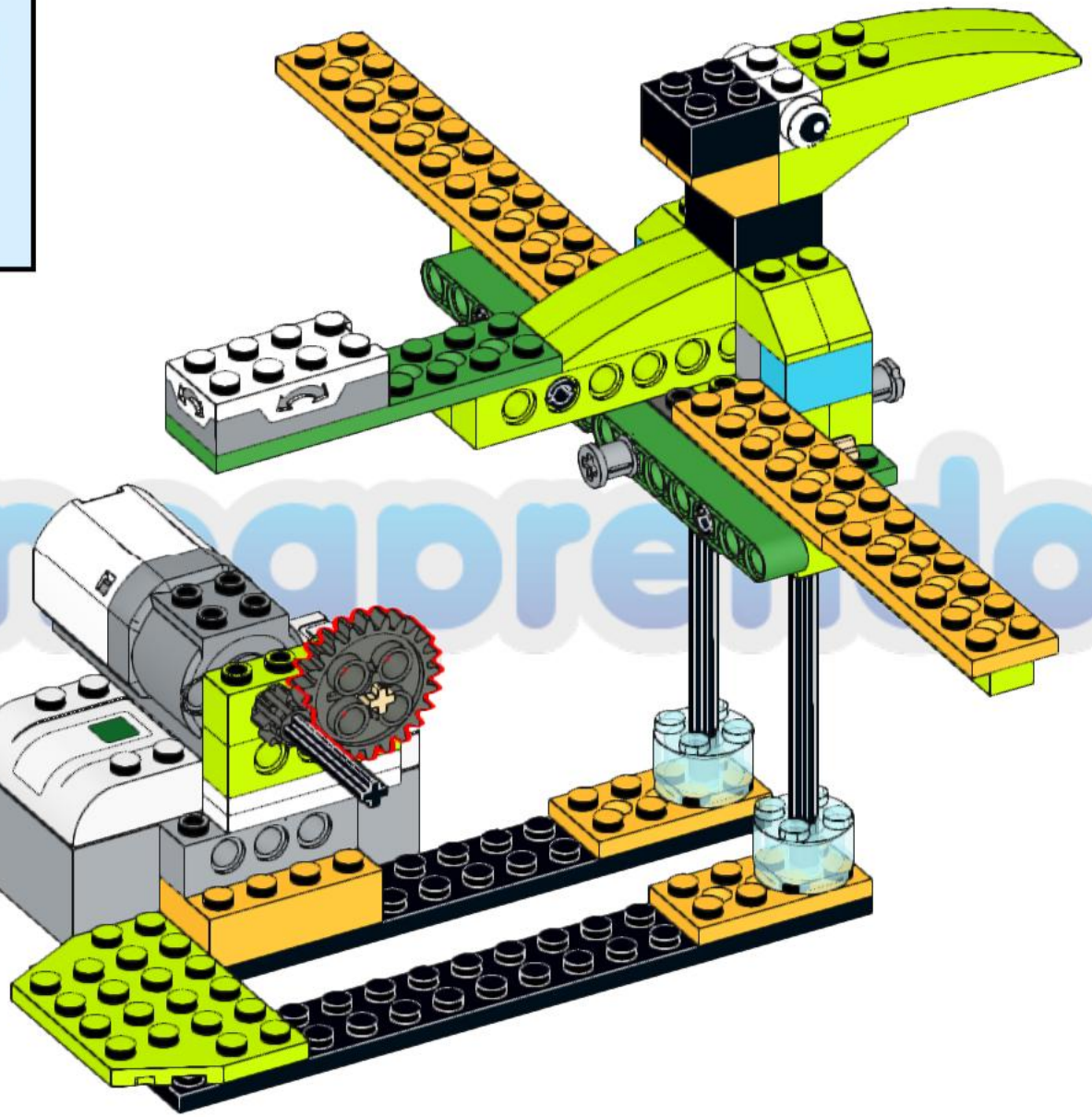

Tecnoaprendo

# 28

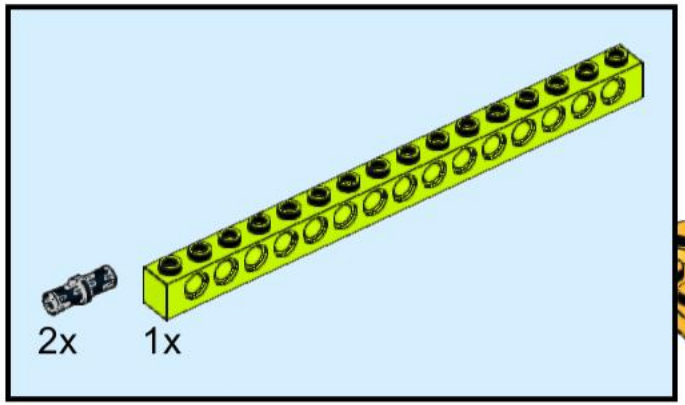


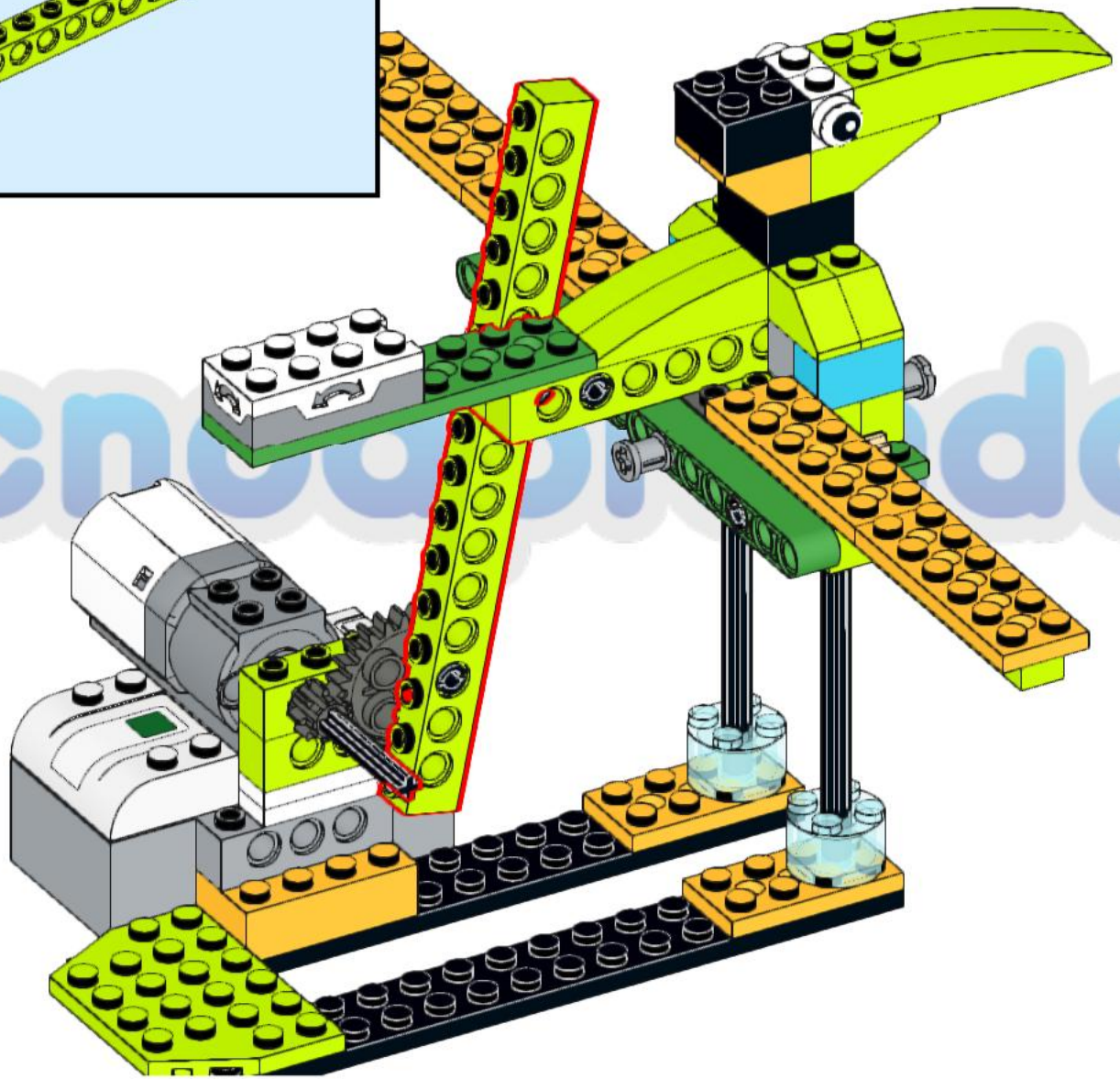

Tecnoaprendo

Tecnoaprendo

Now you only need to rotate the motor

7x
2780, 11

2x
3003, 11

1x
3706, 11

2x
3737, 11

2x
4282, 11

1x
10928, 85

2x
32064, 85

1x
3648, 85

4x
3713, 86

2x
2458, 86

2x
44294, 86

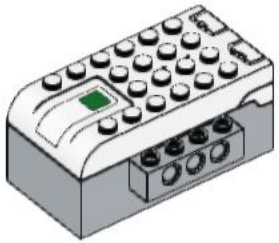

1x
19071c01, 86

2x
98138pb007, 1

2x
87087, 1

2x
3710, 1

1x
20841, 1

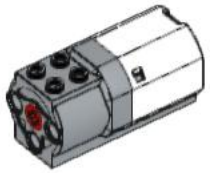

1x
21980, 1

3x
3749, 2

2x
32198, 2

2x
3665, 110

2x
3709b, 110

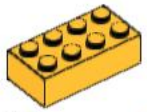

1x
3001, 110

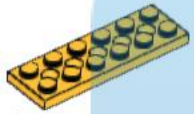

4x
32001, 110

4x
3040, 34

4x
3700, 34

2x
4287, 34

4x
3701, 34

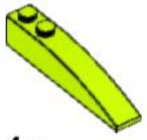

4x
42022, 34

1x
32059, 34

2x
3702, 34

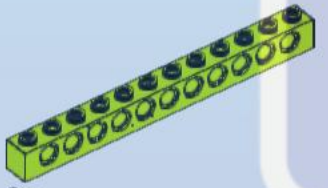

2x
3895, 34

1x
3703, 34

2x
32524, 36

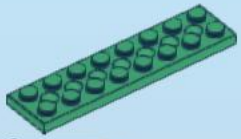

2x
3738, 36

2x
3004, 156

4x
3941, 15