DATE	DESCRIPTION	REV.
10.08.13	CHANGE AS PER ECN 13–091	A
1.04.17	CHANGE AS PER ECN17–005 B1 WAS 2.822 [71.64]	B
1.18.19	ECN 19–005, BASE WAS NYLON 46	C
11.16.20	ECN21–002,BASE MAT'L WAS BLACK	D

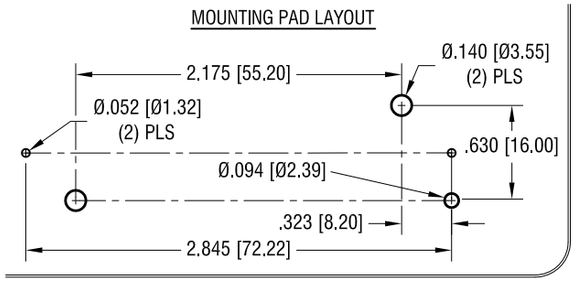

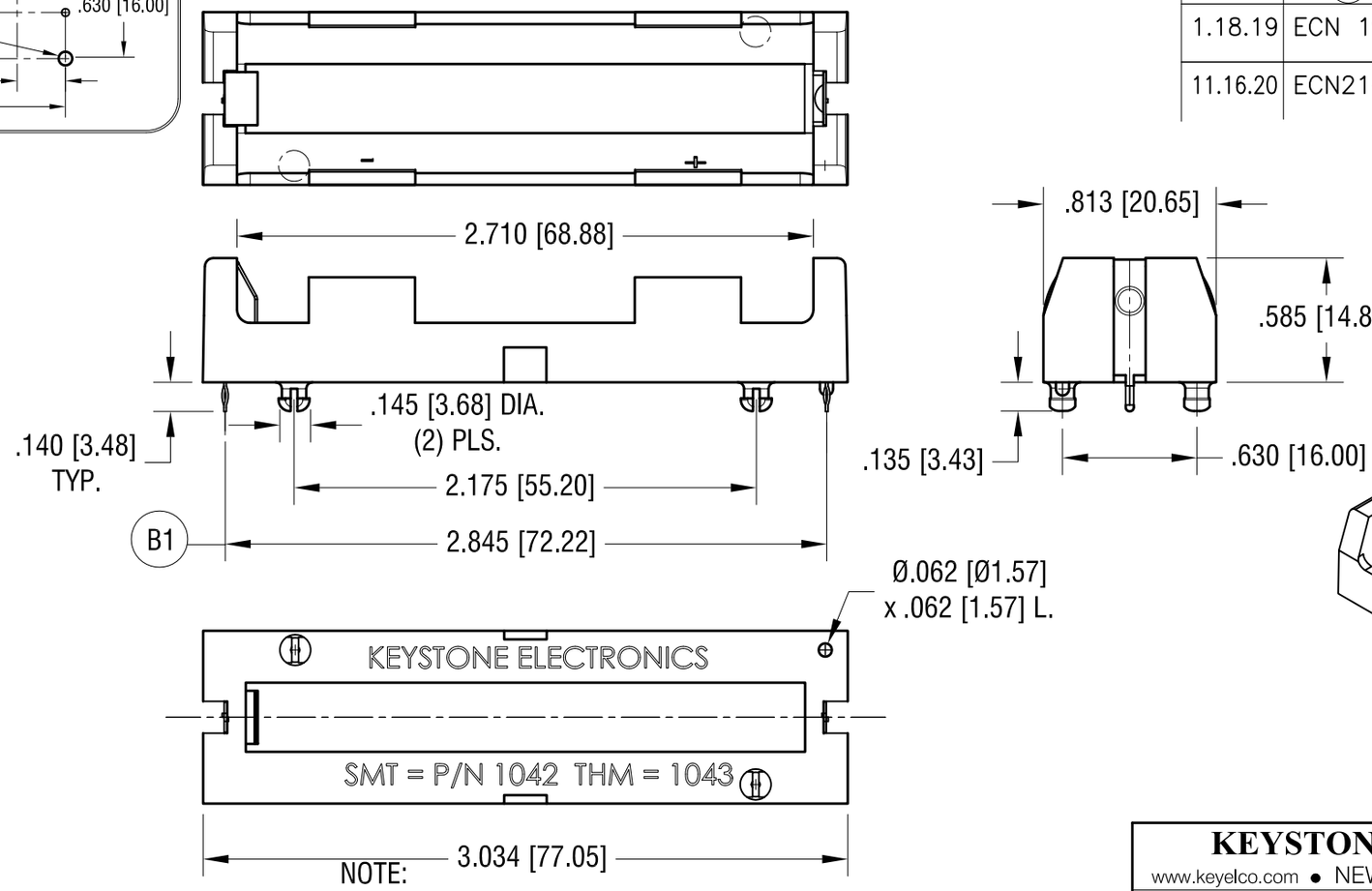

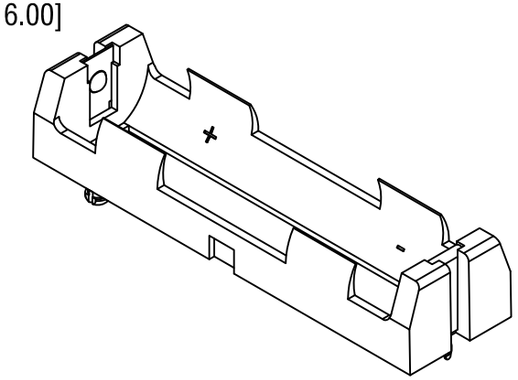

NOTE:

1. BASE:
   MAT'L: PBT, UL 94V-0 (GRAY COLOR)
2. CONTACT:
   MAT'L: .012 [0.30] THK STAINLESS STEEL
   FINISH: TIN NICKEL PLATE
3. CAN BE USED WITH BATTERIES WITH
   CIRCUIT PROTECTION: 67mm MAX. LENGTH
   BATTERY MUST HAVE POSITIVE CONTACT EXTENDED

NOTE:

THIS DOCUMENT IS THE PROPERTY OF KEYSTONE ELECTRONICS CORP. AND SHALL NOT BE REPRODUCED, DISTRIBUTED OR USED AS A BASIS FOR MANUFACTURE WITHOUT PRIOR WRITTEN PERMISSION FROM KEYSTONE ELECTRONICS CORP.

KEYSTONE ELECTRONICS CORP.

www.keyelco.com • NEW HYDE PARK, NY 11040 • Tel (516) 328-7500

PART NAME: THM POLARIZED HOLDER, 18650

MATERIAL: AS NOTED

FINISH: AS NOTED

DRN BY: NT | DATE: 7.12.13

APP'D: RH | SCALE: 1.25X

TOLERANCES INCH [MM]
DECIMAL ± .010 [± 0.25]
ANGULAR ± 1°
UNLESS OTHERWISE SPECIFIED

CODE: C

DWG NO. 1043P