TSO

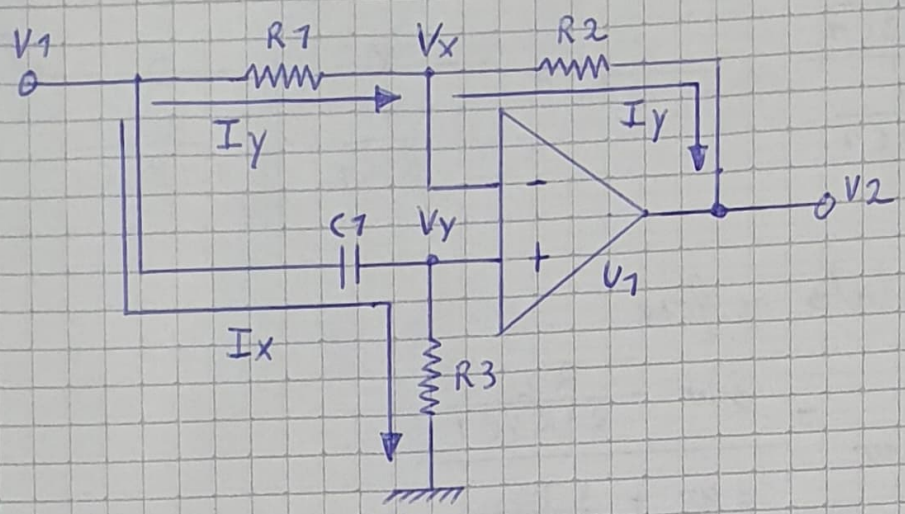

$$H(S) = \frac{V2}{V1}$$

$$Vx = Vy$$

En Ix aplicamos divisor de impedancias para hallar Vx

$$Vx = V1 \cdot \frac{R3}{\frac{1}{SC1} + R3} = V1 \cdot \frac{R3C1S}{R3C1S+1} \rightarrow \boxed{Vx = V1 \frac{R3C1S}{R3C1S+1}} \quad (1)$$

Buscamos Vx con las corrientes "Iy"

$$\frac{V1 - Vx}{R1} = \frac{Vx - V2}{R2} \rightarrow \boxed{V1 \cdot R2 - VxR2 = VxR1 - V2 \cdot R1} \quad (2)$$

$$(1) \rightarrow (2) : V1 \cdot R2 - V1 \cdot \frac{R3C1S}{R3C1S+1} \cdot R2 = V1 \cdot \frac{R3C1S}{R3C1S+1} \cdot R1 - V2 \cdot R1$$

$$V1 \cdot \left(R2 - \frac{R1 \cdot R3C1S + R2R3C1S}{R3C1S+1} \right) = -V2R1$$

$$\rightarrow H(S) = \frac{V2}{V1} = -\frac{1}{R1} \cdot \frac{\cancel{R2R3C1S} + R2 - R1R3C1S - \cancel{R2R3C1S}}{R3C1S+1}$$

$$H(S) = \frac{1}{\cancel{R1}} \cdot \frac{\cancel{R1R3 \cdot C1}}{\cancel{R3 \cdot C1}} \cdot \frac{S - \frac{R2}{C1R1 \cdot R3}}{S + \frac{1}{C1R3}}$$

$$\rightarrow \boxed{H(S) = \frac{S - \frac{R2}{R1R3C1}}{S + \frac{1}{R3C1}}}$$