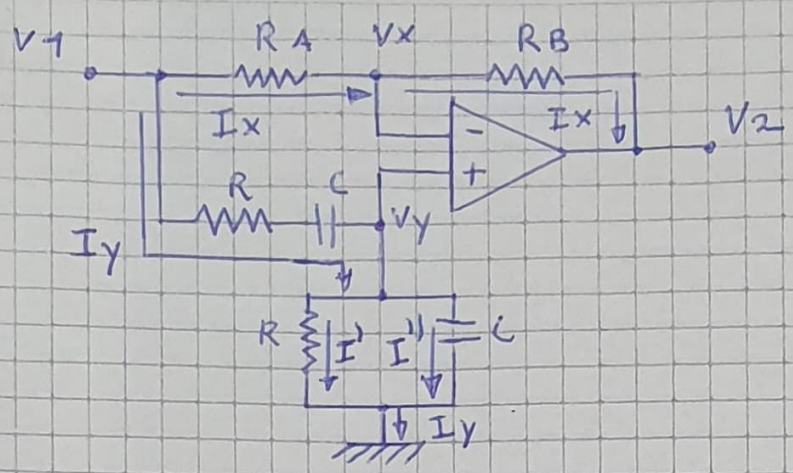

$$H(S) = \frac{V_2}{V_1}$$

$$V_y = V_x$$

$$I_y = I' + I''$$

De la corriente Iy calculamos el nodo Vx

$$V_x = V_1 \cdot \frac{\frac{R \cdot 1/SC}{R + 1/SC}}{\frac{R \cdot 1/SC}{R + 1/SC} + R + \frac{1}{SC}} = V_1 \frac{\frac{R}{RSC+1}}{\frac{R}{RSC+1} + \frac{RSC+1}{SC}} \rightarrow V_x = V_1 \cdot \frac{RSC}{RSC + (RSC+1)}$$

$$\rightarrow \boxed{V_x = V_1 \cdot \frac{RSC}{RSC + (RSC+1)^2}} \quad (1)$$

De las corrientes Ix calculamos el nodo Vx

$$\boxed{\frac{V_1 - V_x}{RA} = \frac{V_x - V_2}{RB}} \quad (2) \Rightarrow (1) \rightarrow (2) = (3)$$

$$\boxed{V_1 \left(RB - (RA + RB) \cdot \frac{RSC}{RSC + (RSC+1)^2} \right) = -RA \cdot V_2}$$

$$H(S) = \frac{V_2}{V_1} = -\frac{1}{RA} \cdot \frac{\cancel{RB \cdot RSC} + RB \cdot (RSC+1)^2 - RA \cdot RSC - \cancel{RB \cdot RSC}}{RSC + (RSC+1)^2}$$

$$H(S) = -\frac{1}{RA} \cdot \frac{RB \cdot (R^2S^2C^2 + 2RSC + 1) - RA \cdot RSC}{RSC + R^2S^2C^2 + 2RSC + 1}$$

$$\boxed{H(S) = -\frac{RB}{RA} \cdot \frac{S^2 + S \cdot \frac{1}{RC} \cdot \left(2 - \frac{RA}{RB}\right) + \frac{1}{R^2C^2}}{S^2 + S \cdot \frac{3}{R \cdot C} + \frac{1}{R^2C^2}}}$$