The Southern Journal of Philosophy (1986) Vol. XXV, Supplement

WHERE HAVE ALL THE OBJECTS GONE?

Carl J. Posy
Duke University

I. Introduction

Some time ago, Ralf Meerbote suggested to me that I adapt the semantic machinery I had developed for interpreting other parts of the *Critique of Pure Reason* to reconstruct Kant's reasoning in the "Transcendental Deduction." Being pressed at the time by other projects I didn't take up the suggestion. Besides, I was daunted (as Kant himself admits to being) by the frightening mixture of ontology, grammar, and phenomenology in the "Deduction." I changed my mind when I read three accusations made by Ralph Walker in his treatment of the "Deduction":[1]

(1) Walker says that transcendental idealism (Kant's ontology of empirical objects) plays no role in the argument there.

(2) Secondly, Walker says that the unity of apperception is a similarly vestigial notion. The argument would be just fine without it.

(3) Finally, Walker chides anyone who believes that the "Deduction" can show anything more than that the categories "apply throughout experience." [p. 76] He specifically denies that Kant managed to prove that they apply to "entities in the world," like tables and tiepins and hats.

These are serious challenges. Kant certainly considered his idealism to be a central feature throughout the "Analytic's" assault on Humean skepticism. And in both editions he paraded the unity of apperception as the hub of the "Deduction." But my instincts told me that Kant was right, and that my machinery could defend him from the first two accusations.

Moreover, I positively hoped that my semantic machinery would exonerate Kant of the third charge. For I had come to suspect that those features of my interpretation which distinguished it from other semantic readings of Kant's idealism would, as a secondary effect, eliminate the notion of an object altogether. If this were true, then my reading would be a poor model not only of Kant but of any ontology at all. I hoped that interpreting the "Deduction"—the place where ontology and semantics mix most intimately—would show that my interpretation does indeed display the proper respect for the notion of an object.

So I turned my attention to the "Deduction." The research was eye opening: It showed that my semantic approach does involve the notion

of an object and does vindicate Kant's claims about the roles of transcendental idealism and the unity of apperception in that part of the *Critique of Pure Reason*. But more strikingly, working with the "Deduction" helped me begin to clarify the Kantian interaction between the separate disciplines of semantics, ontology and transcendental psychology, an interaction that is often misunderstood.

In what follows I shall give a progress report on this research, and to do this I have set myself four tasks: (i) I shall first set out two rival semantic interpretations of transcendental idealism—a version of the standard referential reading and my own "evidential" interpretation—and indicate some problems with the referential one. (ii) But the evidential reading, as I said, runs into its own problems with the notion of an object. Since I believe these problems come from mistaking certain psychological concepts for semantic and ontological ones, my second task will be to show the origin of Kant's notion of an object in his transcendental psychology. (iii) Then I will combine this analysis with my interpretation of transcendental idealism to reconstruct one strand of Kant's reasoning in the "Deduction" in a way that answers Walker's criticisms and avoids the problems I found in the referential interpretation. (iv) Finally, I shall show how my reconstruction requires us to refine our picture about the relation of ontology, semantics and transcendental psychology. As a final twist, this will have the effect of showing that the rival interpretations are not as different as they appear at first.

II. Semantic Interpretations

A. The Referential Interpretation

Let's turn then to the first task, setting out the rival semantic interpretations. I will first describe Gordon Brittan's very powerful version of the traditional referential ontology.[2]

Brittan holds that empirical objects exist only when and only as posited by our scientific theories. This is a famous Quinean belief, but since it makes objects mind (or at least theory) dependent, this is Brittan's version of transcendental idealism. Once again like Quine, Brittan believes that the mechanism for all this positing is just the machinery of first order quantificational semantics, the classical model theory which bases truth on reference to a domain of objects and uses the standard recursion clauses for compound statements. This is Brittan's "empirical realism": A scientific theory can be true in the deepest sense of truth, and the objects posited by this theory (no matter how abstract they might be) truly do exist.

However—this time in opposition to Quine—Brittan also holds that those objects which we posit are essentially incomplete. And he has put a precise face on this incompleteness: failure of the principle of bivalence. If our science leaves undecided the assignment of some

property to one of the objects that it posits, then the statement claiming that this object has the given property will be neither true nor false.[3] Brittan's most forceful examples come from the theoretical sciences. Think of the economist's arbitrary agent who has a specific income and economic preferences but no other traits, or consider the mathematician's arbitrary triangle, used to prove some geometric theorem. Claims that our sample agent is tall or short, blond or bald are simply without truth value. And it is neither true nor false that the arbitrary triangle is scalene or isosceles. But according to Brittan this incompleteness is not limited to theoretical objects. It infects ordinary empirical objects as well: hats, tables and the like. Indeed, for Brittan, theoretical and ordinary objects differ at most in degree, not in kind.

Kant, of course, deeply agrees with Brittan's emphasis on incomplete scientific knowledge. At A477/B505 he says:

> In the explanation of natural appearances, ..., much must remain uncertain and many questions insoluble, because what we know of nature is by no means sufficient, in all cases, to account for what has to be explained.

And Kant clearly believes this to have ontological effects. That is the point of the first antinomy: The impossibility of our coming to know the finite or infinite extent of spacial reality dictates that this reality is, in fact, neither finite nor infinite.

And now we can use Brittan's ontology to interpret Kant's reasoning. The claim that the world is neither finite nor infinite in space is a straightforward result of the fact that judgments about the size of the world simply lack truth value.

Unfortunately, there are at least three problems for this reading of Kant. (1) Kant does not say that these claims about the spacial extent of the world lack truth value. He says that they are simply false.[4] (2) Even more importantly, Kant does distinguish *in kind* between ordinary empirical objects and theoretical ones like those posited by mathematics. His famous claims about how the mathematician goes directly to intuition and considers mathematical concepts *in concreto*[5] and his infamous examples of counting by dots or fingers[6] all serve to deny that mathematical knowledge concerns a separate domain of special objects. The mathematician, on Kant's view, considers concrete empirical objects and obtains his generality by highlighting certain of their properties and ignoring others. Indeed, insofar as we do consider mathematics to be a separate autonomous enterprise, then Kant describes it as "a mere play of imagination" and "without objective validity." (A239/B298) Indeed, it is without an object altogether, for when the mathematician goes through the motions of positing objects, Kant is careful to say that "there is no question of ... existence at all." (A719/B747) Insofar as the mathematician is to provide us with knowledge, his objects must be the ordinary empirical ones. (3) Finally,

turning to those ordinary empirical objects, Kant says that we must presuppose the "distinction [of these objects] from each other, and their complete determination." (A582/B610) Empirical objects are, for Kant, fully determinate and complete. For these reasons I believe that Brittan's notion of incomplete objects falters as an interpretation of Kant.

B. The Evidential Semantic Model

My alternative suggestion is to incorporate the incompleteness of knowledge in the semantics itself. Specifically, I recommend a semantics which dispenses with reference and instead defines truth in terms of evidence. This semantics replaces the traditional notion of a domain of objects (which serve as denotata for some statement) with the idea of an "evidential situation," a collection of bits of evidence relevant to that statement. A statement counts as true at a given situation only if it is warranted by the evidence available in that situation. It is false at a situation only if the available evidence indicates that it will never be warranted.

To interpret transcendental idealism as an evidential semantics we need to find in Kant a theory of evidence for empirical judgments. Kant's theory of intuitions fits the bill admirably. The basic unit of evidence for singular judgments is the intuition. And the recursion clauses for compound statements will show how to reduce these to intuitions. That is a way to understand Kant's remark that all thought is directed to intuitions.[7]

If we do define transcendental idealism as this evidential semantics, Kant's claims of actual falsity for the thesis and antithesis of the first antinomy fall easily into line. The thesis and antithesis can be symbolized as quantified statements: one claiming that there is a farthest spatial object, and the other saying that for any spatial object x, there is another y, that is further away from us than x. Then all we need to do is formally express Kant's famous proofs that we can never find intuitions sufficient to assert either of these claims. That is precisely what is needed to show them false.[8] Moreover, the incompleteness involved here is an incompleteness of our knowledge. It is not an ontological incompleteness in any empirical object.

But, as I said at the outset, this same advantage of the evidentialist reading of Kant appears to be its own downfall. For where have all the objects gone? Evidentialism is a theory about the conditions of truth for our empirical judgments. It is not an ontology at all; it says nothing about empirical objects or our ability to have contact with them. And how could this semantic theory be an interpretation of Kant? Kant repeatedly speaks about how our knowledge comes in contact with *objects*. And he claims with tedious regularity that empirical *objects* are mere appearances and contrasts this with the transcendental realist's claim that these *objects* are independent of our mental life.

Indeed, Kant says that "intuition takes place only insofar as the object is given to us." (A19/B33) This is the very same intuition whose role, I just said, was the basic unit of evidence. A judgment, he tells us, is "objective" only insofar as its concepts are "combined *in the object.*" (B142) Indeed the whole official purpose of the "Deduction" is to prove that the Categories are the sorts of concepts which can "relate to" (i.e., subsume) empirical objects, i.e., that the principles derived from these categories do hold true of empirical *objects.*[9]

So, if evidentialism is to succeed as an interpretation of Kant, it must accommodate Kant's frequent use of objects, and must in fact explain these notions of *objectivity*, *givenness* and *subsumption*. Since I believe that Kant's notion of an object and these allied concepts really originate in his transcendental psychology, I propose to look next at the psychological origins of these notions. Only after doing that will I consider how that psychology can be connected with evidentialist semantics. I will show how this connection forms a basis for interpreting Kant's argument in the "Deduction" in a way that answers all of the initial objections.

III. Transcendental Psychology: Objectivity, Givenness, Subsumption

The basic move in Kant's transcendental psychology is to assume that we are peeking in at a momentary "state of mind" (*Gemütszustand*) of an idealized subject (call her Phyllis) who is attending to a specific judgment, e.g., *Brittan's hat is on the table.*

Kant, as we all know, will divide Phyllis' state of mind into a passively received sensory component (her perceptual tableau including her view of the hat, the table and their surroundings) and an active (or spontaneous) part. The spontaneous part divides the basic sensory data into separate elements and associates (synthesizes) these elements with others. In doing this organizational work Phyllis is guided by the judgment at hand. Thus for instance she will associate the hatband piece with the hat-brim piece and not with the visible lectern. For in the case that we are considering she is concerned with hats, rather than with brown colored things.

Now Kant insists that Phyllis herself is responsible for linking together the brown, furry and elevated components of her tableau and distinguishing them from the smooth, flat aspects which mark the table top.[10] But obviously any observer can tell that these groupings are not whimsical. Nor are they random or accidental, as would be a grouping which separated the brim from the band because Phyllis happened to notice one before the other, or a grouping which linked the hat and table top because she noticed them together. And one of the issues addressed by Kant's transcendental psychology is just what conscious markers there are that distinguish objective groupings such as these, from what he calls "accidental collocations," (A121) or mere "subjective unities":

(B142) simple reports of the internal arrangements of Phyllis' momentary state of mind.

According to Kant a synthesis is objective if it is carried out according to a "concept", and a concept itself must be viewed as a *rule*.[11] Only a conceptual (or rule-governed) synthesis can "determine" a manifold (B143), i.e., can distinguish it from a haphazard collection and provide it with a "necessary unity" (B142). Indeed, we may speak of the representations grouped together by this sort of synthesis as an "object-class": for only if a class of representations have been put together in a rule-like fashion can we assert that they are "combined *in the object*." (*ibid.*)

There is much discussion in the current literature about rules and about what they can and cannot accomplish. Suffice it now to say that rules require repeated instances. So if Phyllis links the brim and the band together in a rule-like object-class, then she is implicitly projecting a whole network of other possible mental episodes in which the same connection is made. Phyllis need not be actively conscious of all these projections,[12] but if she were to make explicit all that is included in this hat-class, she would imagine viewing the hat from a different angle, or noting its features in some different order. She would also consider the possibility of experiencing more of its features and relations (perhaps looking at its underside). But she will assume that in all of these imagined conscious episodes she will continue to link the furry brown brim and the thin striped band as part of one and the same object, Brittan's hat. Indeed, "assumption" is not quite the right word here; for Phyllis is also *predicting* that whatever glance she does actually make will preserve the sensory elements which allow her to combine the brim and band into a hat. Figure (1) schematically pictures a state of mind with some of its imagined projections made explicit.

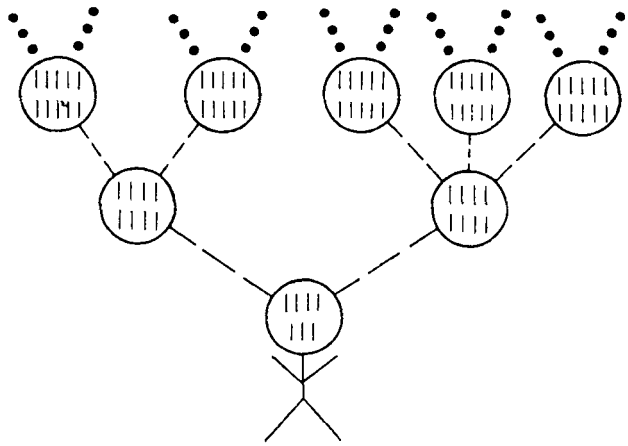

Figure 1

In this diagram, only the bottom circle represents the actual state of mind. The others are at best imagined projections.[13] It is important to allow the levels to extend indefinitely, for our conscious episodes are of limited, finite duration, and there is always more to experience.

Most readers of Kant are familiar with a distinction very much like the one I am making here from the discussion in the "Second Analogy" of the difference between subjective and objective time order.[14] Noticing the brim before the band is *subjective*. It is a fact about Phyllis' state of mind and no more. By contrast, noting that the hat was first on Brittan's head and then on the table is *objective*. I am building on this well known distinction in two ways. First, I am suggesting that the real difference between these two time orders is Phyllis' prediction on the one hand that further experience and information will continue to place the hat first above and then adjacent to the table, while on the other hand she is perfectly willing to imagine future glances (which would be depicted in the upper circles of Figure 1) that would display the hat and band in all sorts of temporal orders.

Secondly, I am proposing that this same method goes beyond judgments about time order and accounts for Kant's overall theory of objectivity. Here indeed is the source in transcendental psychology for the notion of an object and the general principles of objectivity, subsumption and givenness. *Positing an object*, in the psychological sense, amounts to generating an object-class. It amounts, that is, to synthesizing a manifold of sensations under the aegis of a concept and thereby projecting that this unity will be preserved in future experience. And we can say that those syntheses in a mental episode which Phyllis implicitly projects to future states of mind (things like brim linked to band and table top linked to legs) are the *objective* parts of the episode. They underlie *objective judgments*. Those syntheses which cannot be thus projected (e.g., brim before band, or the fact that table top and brim were noticed simultaneously), these elements will be the accidental and merely subjective parts of the episode.

Similarly, to say that an object is *given* in an intuition is simply to say that the sensory manifold carried by that intuition has been organized into the appropriate object-class. The sensory manifold may indeed be passively received; but in order for that receptivity to signify that an object is "given," there must also be an element of thought and thus organization into an object-class.[15]

Finally, *subsuming* an object under a concept is simply taking care to incorporate that concept in the projections of the corresponding object-class. Thus for instance subsuming the viewed tableau under the concept "hat," amounts to predicting that there will be a corresponding object-class in the projected future mental states and that its elements will always present themselves in a hat-like fashion. We have just seen that there is no positing at all without some such subsumption. Similarly, subsuming the hat thus posited under the concept "brown" is

simply adding the rule which predicts that these projected elements will always also be (mainly) brown.

IV. The Transcendental Deduction

A. The Categories

Now all of this analysis—the whole business of object-classes, projections, givenness and the rest—belongs solely to phenomenology (transcendental psychology). By itself it has no semantic and no ontological weight.

To give it that semantic weight we need to do two things: First, we need to view these mental states that I have been talking about as the basic constituents of "evidential situations." So we should now think of ourselves as peeking in at Phyllis as she synthesizes and organizes those elements of her conscious life which can serve as *evidence* for her judgment about Brittan's hat. Secondly, we need to define evidential warrant as *truth*. That, on my view, is the heart of transcendental idealism; and it is, I suggest, the main step to deducing the "objective validity" of the categories.

To see this, note that having made this identification of evidence with truth, we must ask an obvious question: By what right does Phyllis invoke those rules, and what justifies the predictions associated with her objective syntheses? She can imagine future experience in any way she likes (that, after all, is part of her spontaneity), but making predictions is a bolder step, for predictions have to be well founded. So in particular we must ask what justifies her prediction that the hat will continue to appear brown, or that the brim and band will persist in a hat-like configuration? These are, after all, empirical claims about future experience. Phyllis' willingness to make these claims is what makes her judgment objective; but, given our new semantics, we now see that only if these predictions are justified can we count the judgment as true!

One thing is certain. Phyllis cannot appeal to objects outside the circle of her own representations in order to justify her claims about these representations. She cannot say, for instance, that hat perceptions belong with brown perceptions because the hat is in fact brown; or that brim and band perceptions belong together because the brim and band are in fact parts of the same mind-independent object. She can think of that object, to be sure, and she might feel as if it guides her in her judgment or its associated projections (insofar as she contemplates these projections at all). But thinking and feeling are not knowing. From the transcendental idealist's perspective, these thoughts and feelings are at best directed to a transcendental object =x. However tempting it might be to contemplate it, this unknown x cannot serve as an empirically satisfactory justification for any predictions about the future.

The only thing that can justify an empirical claim is information forthcoming from the evidential state itself. If our empirical claim concerns time order—the claim, for instance, that Brittan's hat was first on his head and then on the table—then the only thing that would justify it would be Phyllis' discovery within her experience of an empirically satisfactory explanation of that movement. And, according to Kant, the heart of any such explanation will be a causal law which identifies the hat's latter position as a necessary effect of its prior position. (E.g., Phyllis might note that Brittan grasped the hat and then dropped it and then she might apply the laws of elementary physics.) Only if she is certain that she will discover some such explanation can she be certain that all future experience will corroborate that time order: head before table.[16]

Similarly, the simple judgment that there is a hat present will be objective only if it is accompanied by predictions that there is a fixed configuration of the various perceptable parts which will continue through future glances and will preserve the hat shape in all of those glances. This judgment will be true only if those predictions are justified. And, Kant tells us, the only thing that will justify those predictions is evidence displaying a measurable spacial distance separating the brim, for instance, from the band. Measurability (*via* homogeneous synthesis) guarantees spacial fixity, or so Kant thought.[17]

In general, objective empirical judgments which fall under Kant's category of *quantity* will always involve just such projections about future states of mind: predictions that future experience will corroborate the present perception of shape and size. Those predictions can be *justified*, and the corresponding judgments counted as *true*, only if the same evidential episode provides evidence of a measurable spatial region. In a nutshell, if any epistemic situation is to support a judgment about a spatial object, then its intuitive content must be measurable. That of course is just the principle announced in the "Axioms of Intuition."

This then is the overall formula for deriving the "Principle of the Understanding" associated with each one of the categories. It has four steps: (1) We isolate the class of objective judgments whose grammatical form places them under that category. (2) We note that to be *objective* on a particular occasion, any one of these judgments must rest on a network of predictions about future such occasions. (3) We observe that for such a judgment to be *true*, those predictions must be justified, they must be made on good evidence. (4) Finally, we note that since this justification cannot come from the "outside" we must assume that our mental states can provide the evidence needed to justify those predictions. For judgments in the category of *quantity*, this will be evidence about measurable spatial or temporal expanses. For judgments presupposing temporal order this will be the discovery of a causal law linking the earlier with the later event. And so on for each category.[18]

This argument for the validity of the Principles is also an argument for the claim that the categories "apply to objects." If it works, it shows that each category "subsumes" (in the sense of subsumption that I described before) the objects posited by the judgments falling under that category. The argument rests crucially on equating truth with justification, which was precisely my definition of transcendental idealism. And so Kant's idealism is indeed essential for establishing his conclusions in the "Deduction." That answers Walker's first accusation.

B. The Unity of Apperception

Let's turn to the unity of apperception and Walker's second complaint. I just said that if the argument I have sketched works, then it establishes Kant's desired conclusions. But that is still an "if." From the premise that some simple empirical judgments are experientially justified (and hence true), I have shown how Kant can argue to the conclusion that certain general claims (the "Principles") must also be true. But in order to complete this argument Kant must *prove* that premise; he must demonstrate that at least some empirical judgments are sometimes true. The argument ultimately rests on his ability to establish *a priori* that some of Phyllis' implicit projections are indeed justified.

When you stop to think of it, what grounds do we have for believing that initial premise? The picture of a world in which none of our predictions about future experience have absolute justification is certainly logically possible. Hume played heavily on that possibility. So the question is, how can we be assured that the hat won't instantaneously transform into a dictionary, and the chair won't suddenly become an elephant?

Here is the *entré* for the unity of apperception, Kant's notion that the "I think" can accompany each conscious element. Now, Kant means more here than simply the claim that every representation must belong to some subject. He says that each subject has a single, unified self that serves as a *noetic* pole for *all* her representations! Indeed, he calls this claim analytic. (B135)

The crux of Kant's defense of our initial premise comes when we ask how that unified self shows itself. Our conscious representations don't wear personal brands that mark them as belonging to one subject rather than another. And it can't be that they all belong together as contents in a single conscious container; for the simple reason that (outside of each conscious episode) there is no such conscious container. (Kant quite agrees with Hume that no element of consciousness can serve as a receptacle for all our representations.)

In fact, the only thing that will guarantee the unity of apperception is the sort of organized continuity that I have been talking about. Only if each conscious episode is related to some others both as a fulfillment of prior projections and as a source of additional projections can we be

certain that our mental states are linked together in a single network. Only if my perception of the hat at this instant fulfills past predictions and presupposes future perceptions can I be certain that all these perceptions belong to a single "I." That highly abstract linkage underwrites the unified "self." Without it there would be as many selves as there are conscious moments.[19] And, in particular, if any of the disruptive scenarios I just pictured—the sudden shifts of color, shape or substantive concept—if any of these were to occur, that would break the unity of apperception. This is the connection between the "unity of apperception" and "unity of intuition" that is spelled out at B136-139 and summarized at B143.

There is much, I think, that is questionable about Kant's reasoning here. I for one am skeptical about the analyticity of Kant's claim that there is a single unified self which links temporally distant episodes.[20] But one thing can be said: If Kant were to be right that this is an analytic, or at least an *a priori* truth, then it would form the base of an argument for the *a priori* validity of the "Principles": To the degree that we are certain that there is a unified self, then we must be certain that our conscious episodes stand in a network of projections and fulfillments. Since we cannot appeal to an external correspondence in order to justify those projections, we must be certain that sufficient material will come in our conscious states themselves to justify our projective claims. The "Principles of the Understanding" are simply reports that this evidence must be there.

C. Objects for Us/Objects for BATS

That shows the centrality of the unity of apperception in the "Deduction." Let's turn to Walker's third point, his allegation that Kant has established the validity of the categories only as far as experience, and has not proved that they apply to actual objects.

Kant himself seems to have felt the pinch of this objection. After having covered all the points connecting the unity of apperception to the applicability of the categories, he claims (at B144) that he has just begun the work of the "Deduction." He says that he has not yet proven the applicability of the categories to the objects of the world. What's missing? What more is there to Kant's concept of an empirical object than the notion of object-class which lay at the heart of this argument?

To answer this question, and to recreate the circumstancs under which Kant asked it, I have to take back a bit of the reconstruction I've just offered. Specifically, I have to take back my implicit assumption that our ideal subject is human. [Indeed, I gave her a feminine name to emphasize this assumption.] But Kant, if we are to believe him at B145, has been operating at a different level of generality throughout *his* reasoning on these matters. He has been concerned, he tells us, with the notion of a finite understanding in general; concentrating, that is, on the general process of organization that any mind (human or otherwise)

applies to an intuitive manifold. He has been careful to assume that this is a "sensible" mode of intuition (one which is receptive and not productive). But in abstracting from the humanity of his subject, what Kant has *not* assumed is that these intuitive manifolds are governed by the laws of space and time.

Instead of a human ideal subject, Kant is focusing on a hypothetical intelligent being who is like us in every way except possibly that his inner experience need not be temporally ordered and his outer intuitions might not conform to the laws of Euclidean geometry. This *B*eing which is *A*-*T*emporal and a-*S*patial (or *BATS* for short) plays the same role in Kant's reasoning that *homo economicus* plays in economics: He has just those features which are relevant to the theory in question and no others.

Like us, BATS will carve up his intuitive content into object-classes which are built in conformity with the judgment at hand. He will distinguish those object-classes as rule generated and will express the rules as projections and predictions that some aspect of the actual mental state will persist through imagined other mental states. Like us he mustn't appeal to any external correspondence to justify his predictions. So again, like us, he will be forced to assume that his epistemic condition itself can produce the evidence to support his various projections.

But BATS—unlike us—may not assume that the imagined projections are about *future* mental states, nor that the contents of any given mental state themselves enter consciousness *one after the other* in time. Considering the inner life of this hypothetical being is a purely theoretical exercise. That's why Kant insists that we cannot concretely imagine what it would be like to be BATS.

It is, to be sure, an important exercise. For it eludicates what Kant calls "the object of a sensible intuition in general," (B148) the "partial object,"*par excellence*. But this rarified object is, for Kant, no object at all! That is his point at B148-9 where he says that the concepts of these sorts of objects are "empty concepts." In thinking of BATS and abstracting from the forms of space and time we consider the ideas of unity, objectivity, projection and the rest wholly in the abstract. But Kant insists that no matter how useful this abstraction may be for the general theory, none of these notions can become "objectively real" until they are shown to apply to the concrete intuitions that populate actual human conscious episodes. "Only *our* sensible and empirical intuition can give them body and meaning." (B149)

For think again of our judgment about Brittan's hat. [Kant's own example concerns a house not a hat.] Recall, that in order to maintain the objectivity of this judgment I must project that my intuitive manifold will continue to contain perceptions that attest to the invariant shape and size of the hat through various changes in perspective. But Kant now observes that in predicting this constancy of

shape and size I must also predict that the general laws which govern shape and size (the laws, he thought, of Euclidean geometry) will also not change. His point is that if I do not include this explicitly, then I have not guaranteed the unity of apperception. It is not enough to guard against unexplained changes of shape. This unity would be just as disrupted if the hat shape were constant relative to our overall geometry, but space itself were suddenly to shift from Euclidean to Riemannian and then perhaps to some other global geometry without warning or explanation.[21] And, Kant insists, without adding this specifically human element to the general theory, we have not yet succeeded in demonstrating the applicability of the categories to real objects.

Actually, Kant's point goes a step farther. I have just described Kant's account of *figurative synthesis*: a notion of imaginative projection which includes predicting the invariance of space and time—and so is less general than that of BATS' *intellectual synthesis*—but which abstracts from any more specific aspects of the perceptual features being projected. This is the level of Kantian pure mathematics. We might perhaps, by analogy to the syntheses discussed in Part III above, be able to develop an account of some variety of more abstract object-classes which would be involved in this figurative synthesis. This would correspond to the process of positing purely mathematical objects. But for Kant mathematics viewed in this way is still too general a theory. He insists again that mathematics would fail to be knowledge if we were to stop at this level of generality, and its objects would fail to exist.[22] What's missing is the explicit connection to the intuitive content of an actual perceptual episode.

This is why Kant requires that mathematicians must rest their proofs on actual perceptual experiences. The same will hold for our transcendental philosophy. It doesn't validate the categorial principles for some abstract realm of objects-in-general. It applies to the very same objects which provide the truth of empirical discourse.

And that is Kant's bottom line: To prove the objective reality of the categories and principles, we must not only show that these concepts and judgments are necessary to justify the unity of object-classes and ultimately to preserve the unity of apperception, we must also guarantee that the object-classes in question are composed of actual concrete sensory experiences.

In this sense the objects of the theory must be concrete, perceivable empirical objects, different in kind from pure abstractions. No referential account of mathematics or of transcendental philosophy can say that.

V. Semantics and Projects

So you see how the evidential semantic interpretation does provide for the roles of transcendental idealism and the unity of apperception in

the "Transcendental Deduction." It does all of this without basing truth on reference and in a way that accommodates Kant's uses of the notion of an object in his theories of objectivity, objective unity, subsumption and objective reality. And in doing this, it respects Kant's distinction in kind between the objects posited by ordinary empirical discourse and those of the more abstract mathematical discourse.

I have left out many details, and there certainly remain problems to be solved before this can be a full account of the role of objects in Kant's philosophy. However, for now I will address only one formal and one conceptual issue raised by my presentation of Kant's views.

A. Peircean Semantics

The formal issue comes from thinking about these objects posited by empirical discourse. Positing an object, recall, amounts to mentally generating an object-class. Now because our mental episodes are temporally short and are limited by the available evidence, we must assume that any given object-class will lack some relevant information, and thus be incomplete. [My gaze hasn't yet told me the color of the underside of Brittan's hat.] And because these states of mind determine the truth values of our ordinary empirical judgments, you have the perfect recipe for the failure of bivalence, even for singular empirical judgments! [Right now the claim that Brittan's hat is brown all over is neither true nor false.] But that is the very same unKantian view I chided Brittan for holding.

The answer is that the relation between these epistemic nodes and semantics is not quite as close as I have been leading you to believe. Yes these states of mind are to be viewed as evidential states, and yes a judgment is true only in virtue of this evidence. But that does not mean that truth and falsity are determined solely by the present evidence. We have been neglecting the famous Peircian semantic theory according to which a judgment is true if there *eventually* comes to be evidence supporting it in the fullness of time. And it is false if it is *eventually* refuted. This is a semantics which distinguishes between assertability at the moment and truth, which has now become a tenseless, almost eternal, notion.[23] [Thus, for instance, if tomorrow I find red dots under the hat, then it is simply false (tenselessly) that the hat is brown all over.]

I believe that Kant held this far sighted Peircian view about the relation of truth to evidence.[24] And that is important for us, because under this Peircean theory we must separate the transcendental psychological business of synthesizing object-classes and making the associated projections from the long range semantic question of truth. Once an object-class is in place (once the material sensations of Brittan's hat are present, together with the rule for their organization), then claims about any observable property can be assumed to be fully decided. So if, along with Brittan, we use bivalence as the test of completeness for our empirical objects, then the individual empirical

objects are indeed complete.[25] Non-bivalence (and with it incompleteness) enters the scene only if we consider global judgments which might not be confirmed or refuted even in the fullness of time.[26]

B. Reference and Projects

Now the conceptual point is simply this: In spite of everything I have said, we can't escape the overwhelming urge to use objects as mind independent anchors for our judgments. That is the gut appeal of reference. But let's face it, no amount of fancy semantic footwork can disguise the fact that at the crucial juncture in my version of the "Deduction" (in section IV,A) I drove the objects indoors and rejected any appeal to a mind independent ground for our judgments. So when you ask about the being of empirical objects, you seem to get the Berkeleyan answer that they are wholly intentional objects, *mere* appearances, bundles of representations.

Kant himself occasionally slips into this. He tells us, for instance, that empirical objects are indeed "nothing but representations, and cannot exist outside our mind." (A492/B520) But on the other hand he clearly recognized the threat of a pure phenomenalism. That is why just a bit later at A494/B522 he postulates a "transcendental object" which is the "cause of appearances" and which is "given in itself prior to all experience."

But this transcendental object is poor consolation. For, it is a "purely intelligible" thing-in-itself. In the same passage Kant insists that it is "completely unknown to us, and cannot be intuited by us as object." (*Ibid.*) Indeed, one must wonder by what right he introduces such a transcendental object at all. In answering this we will come to a deeper understanding of Kant's notion of an object, and of Kantian ontology in general.

The key comes when we notice that this question about the *being* of empirical objects is not itself an empirical question. It belongs to an entirely different enterprise, the enterprise (or project) of transcendental philosophy. And Kant very carefully distinguishes the empirical project, whose judgments depict the world of tables, hats, electrons, and the like, from the transcendental project, which concerns the notions of truth and knowledge and which posits such things as evidential situations, object-classes and syntheses.

Within empirical discourse we talk, as I said, about tables and hats and even about their properties to our heart's content. But nowhere in this project do we seek to reduce these objects to phenomenologically generated object-classes. Moreover, in this project we can just as readily use such expressions as "the hat that Posy was referring to" or "the force that Einstein discovered," but we do not assume that the sentences in which these phrases occur are *about* any mental or phenomenological objects. Indeed, the general concept of "object" plays no role at all in the empirical project. And we cannot extend our attributive and referential

way of talking to include a "truth definition" nor criteria of evidence or objectivity for this empirical discourse.

That definition and those criteria belong to the transcendental project, and it is only in this project that the concept of object is first introduced. This is the arena where we investigate the nature of evidence and truth in general. In order to do that we study the structure of consciousness, formulate the general conception of objectivity, and assign truth definitions to the various areas of discourse. This project posits the notion of an idealized subject and her states of mind. It is only in this project that we introduce the notion of "positing" itself, and it is only in this context that we ourselves posit the syntheses and representations which populate those states of mind, and the object-classes composed of those representations. Indeed, it is only in this project that we consider transcendental psychology to be a separable enterprise with its own objects.

Now the transcendental project, concerned as it is with the grounds for truth and knowledge, does ask about the relation between our experience and possible external "causes" for that experience. It allows Kant to postulate a mind independent source for the impressions which we passively receive. To be sure, this source is merely thinkable, not knowable. And it is in comparison to it that the phenomenological constructs governing empirical truth look like *mere* appearances. [Within the empirical project, no such epithet is needed, warranted, or even possible.]

What has happened is that Kant's has replaced our traditional study of the ontology of the empirical world with his own transcendental project, and has divided that project into three parts: transcendental psychology (with its special phenomenological objects), the theory of truth (with its semantic concepts and corresponding objects), and finally his hypothesis about external grounding (with its special objects-in-themselves). The theory of truth is the battleground between Kant's transcendental idealism and transcendental realism. (The idealist holding that the psychological posits play a role in truth, the realist denying that.) By contrast, the hypothesis about external grounding simply aims to satisfy our deep need for a mind independent anchor; or, in Kant's terms, it aims to avoid the "absurd conclusion that there be an appearance without anything that appears." (Bxxvi)

If by "reference" we mean the relation between a passively received representation and its source, then this third part of transcendental philosophy does indeed invoke reference. We may even say that space and time, the forms of human receptivity, structure the noetic side of this reference relation. But if we abstract from these intuitive forms and from the other spontaneous contributions of the subject, then we are left with the bare notion of what Kant (at A494/B522) has dubbed the "transcendental object." This is a perfectly legitimate theoretical notion, introduced for perfectly respectable reasons.

One upshot of all of this is that if you ask what objects are associated with the judgment "*Brittan's hat is on the table*," then the answer is going to be dependent upon the context in which the question was asked.

1) In empirical discourse you are asking something like "What did Posy talk about;" and the appropriate answer will be "Brittan's hat and the table in the lecture hall." No further analysis is needed or possible.

2) From the perspective of transcendental psychology you are asking "In virtue of what is that judgment objective;" and the answer will be "in virtue of the speaker (or whoever entertains the judgment) having generated a Brittan's-hat object-class and a table object-class."

3) In semantics you are asking "In virtue of what is that judgment true." We have seen that one candidate for a Kantian answer will be that the judgment is true in virtue of the properties associated with the object-classes (or with the intentional objects) to which the terms "Brittan's hat" and "this table" refer. But I have suggested that a better Kantian answer would be to say that it is true because the predictions associated with that judgment are justified.

4) You might also be asking about the ultimate source of the representations which go into those object-classes. Here the answer would invoke Kant's unknowable transcendental object.

There is an air of glib relativism about all this talk of project centered ontologies. But Kant is not a relativist. If we can learn anything from his treatment of BATS it is that in the sphere of theoretical discourse[27] the empirical project is primary. Like mathematics, transcendental philosophy itself cannot obtain objective validity without direct relation to the empirical project. Without this tie to empirical science, transcendental philosophy would "mean nothing" (A240/B299), and its idealized subject, its object-classes, its theory of mental states, all of these would be "mere products of the imagination." (A233-4/B271)

That is why the hypothetical external source of our representations can be thought but not known: its existence has no effective empirical value. Nothing would change in our account of which empirical judgments are true if we were to ignore this alleged source altogether.

Finally, this example teaches us what that priority of the empirical means. It means that if two allegedly different theories about empirical truth have exactly the same consequences for empirical discourse (if they warrant exactly the same assertions), then they are not effectively different.

One of Kant's main themes in the *Critique of Pure Reason* is that transcendental idealism will allow quite a different collection of empirical judgments to count as true than will transcendental realism. (Judgments about the existence of spatial objects, logical judgments, and various synthetic *a priori* judgments.) But now think of this dispute I have been pursuing with the referential theory of truth. This dispute

exists entirely at the transcendental level, specifically within what I have called the theory of truth. The question about whether ordinary empirical judgments may be bivalent, or (in Brittan's terms) the question about whether empirical objects are partial or complete, and the question about whether these objects are the base of our definition of empirical truth or whether truth can be defined without them, these questions do not filter down to the empirical level. At that level by and large both accounts will warrant the same set of assertions. So from the proper Kantian point of view they are indistinguishable.[28]

We might debate at great length about the proper Kantian notion of an object, about the definition of empirical truth and about all these other ontological and semantic matters. And we may squeeze and struggle to fit Kant's arguments into this or that modern clothing. But at the bottom, I suspect Kant knew something that we would do well to learn: If we leave exegetical matters aside and concern ourselves solely with empirical truth, then insofar as both alternatives generate identical sets of empirical truths, our debate will have all the force and importance of the debate between the fans of Farenheit and the advocates of Celcius.[29]

NOTES

[1] Ralph C.S. Walker, *Kant*, Routledge and Kegan Paul, 1978. Walker's sustained treatment of the "Deduction" is found on pages 74-86. The three objections are found on pages 84, 80-82 and 76 respectively.

[2] Brittan has set out his views on these matters in several places, but most forcefully and concisely in "Kant and the Objects of Theory," in B. den Ouden (ed.), *New Essays on Kant*, Peter Lang, 1987 and in "Theoretical Objects," presented at the Central Division APA, 1986.

[3] In "What Price Bivalence" (reprinted in *Theories and Things*, Harvard, 1981) Quine affirms the principle of bivalence as a "hallmark of realism." He reaffirms that general realism about empirical objects in "Indeterminacy of Translation Again," *Journal of Philosophy*, v. LXXXIV, January 1987, pages 5-10.

[4] According to Kant both the realist and the idealist will find both alternatives to be false. See A506/B534 and A531/B559.

[5] See e.g., A715-717/B743-744.

[6] See e.g., B15-16.

[7] A19/B33.

[8] I have discussed this interpretation of the first antinomy in more detail in "Dancing to the Antinomy," *American Philosophical Quarterly*, v. 20, 1983; and in "Kant's Mathematical Realism," in *The Monist*, v. 67, 1984.

[9] See A84/B117 ff.

[10] See e.g., B130, B134.

[11] Most explicitly at A104-5 and A158-9/B192-3, but elsewhere as well. See for instance *Anthropologie* Bk. 1 § 7: "... consciousness is divided into *discursive* consciousness (which must come first, since, as logical consciousness, it gives the rule) and *intuitive* consciousness."

[12] See §V of the "Introduction" to the *Logik*.

[13] This, I believe, is the force of Kant's claim that "imagination is a necessary ingredient of perception itself." (A120n.) Perception here means objective perception. (See B152 also.)

[14] A193/B238.

[15] See A156/B195.

[16] This is the point of the "Schematism" at A44/B183. I explore this argument in more detail in "Transcendental Idealism and Causality," in W. Harper and R. Meerbote (eds.), *Kant on Causality, Freedom and Objectivity,* Minnesota, 1984.

[17] This is how I interpret B162 and A162/B202-3.

[18] I believe that this reasoning can be found in the text of the *Critique of Pure Reason* if we read Kant's notions of "determining a manifold" and of "objective unity" (sometimes called "necessary unity" and sometimes simply "unity") as requiring a rule-like synthesis and then understand rule-likeness (and hence unity) as involving projection. It is sometimes tempting to skip step (3) in the argument I presented and to say that the application of an empirical concept already by itself invokes a category (and thus provides an instance of the associated "principle"). This shortcut approach is reinforced by texts such as B233-4:

> ...The *objective relation* of appearances that follow upon one another is not to be determined through mere perception. In order that this relation be known as determined, the relation between the two states must be so thought that it is thereby determined as necessary which of them must be placed before and which of them after, and that they cannot be placed in the reverse relation. But the concept which carries with it a necessity of synthetic unity can only be a pure concept that lies in the understanding, not in perception, and in this case it is the concept of the *relation of cause and effect*, the former of which determines the latter in time as its consequence (*Folge*)...

From this passage you get the picture that simply saying that the order *hat on head then on table* is an "objective" or "determinate" order is already saying that the hat's earlier position must have caused its later one. Since this determinateness and objectivity involves a rule for ordering the perceptions of those hat-positions (a rule which governs the subject's imaginative projections) it is easy to assume that this rule is itself a causal law. (Hoke Robinson makes precisely this move in his generally exemplary review in *Kant-Studien*, v. LXXVIII (1987), of Harper and Meerbote (eds.) *Kant on Causality, Freedom and Objectivity.*) Indeed, Kant does speak of causal laws as rules which determine temporal order. (A144/B183) Nevertheless, I believe that this shortcut argument is untenable. For, even if we stay within the circle of consciousness, we cannot ignore the conceptual gap between on the one hand imagining or even predicting that further experience will corroborate that order of hat-positions and on the other hand *explaining* why those predictions will be confirmed. The rule for determinateness structures the imagination and guides the prediction; the causal law—when it is eventually discovered—does the explaining. That is why we need step (3). The notion of justification that it introduces is designed to bridge the gap between predicting and explaining. It is worth noting that in the passage just quoted, Kant himself does not take the shortcut route. He does not say that in order to be "determined" the relation between the temporally separate states must be thought of as causally necessitated. He says that the concept of causality must be invoked if that relation is to be "known as determined." In empirical discourse the criteria of justification are precisely the criteria for knowledge.

[19] Cf. B130.

[20] I have no quarrel with the analyticity of the claim "... that all *my* representations in any given intuition must be subject to that condition under which alone I can ascribe them to the identical self as *my* representations ..." (B138), if we understand an "identical self" simply as the noetic pole of a representation. This observation might perhaps even be extendable to yield the conclusion that there is a single "identical self" for all the representations within a complex state of mind or evidential situation. (Individuating and counting representations is at best a tricky business anyhow.) But to get his argument going (at least on my version) Kant needs to assume that this same self is there not only for present representations, but also for those projected states of mind which are as yet unborn. I certainly believe that this is the sort of self which is most worth having. And I

take it that being an element of a state of mind which is linked to others in this way is the "condition" to which Kant is alluding in this passage. But whatever other grounds Kant might have for this assumption, I am for now skeptical that his claim that there is such a self is simply analytic.

[21] Much the same holds for time. When I predict the invariance of some allegedly objective temporal relation, I must also simultaneously predict the global constancy of the general laws of temporal ordering. At B160 Kant describes these requirements of global constancy as the unity of space and time as *formal intuitions*.

[22] See A239/B298 and A719/B747.

[23] In this respect the Peircean view differs from the "assertabilism" that is currently championed by Michael Dummett.

[24] See for instance A493/B522: "To call an appearance a real thing prior to our perceiving it, either means that in the advance of experience we must meet with such a perception, or it means nothing at all."

[25] This is the point of A582/B610 where Kant says that

> ... the material for the possibility of all objects of the senses must be presupposed as given in one whole; and it is upon the limitation of this whole that all possibility of empirical objects, their distinction from each other and their complete determination, can alone be based.

Kant is not saying that we must assume that the sum of all empirical reality is itself an object, but rather that we must presuppose this sum (perhaps regulatively) as the guarantor that we can always draw distinctions between and make determinations of empirical objects which have already been given.

[26] A Kantian example would be the judgment that there exist stars which are a hundred times farther removed from us than the most distant stars which are currently detectable. Cf., A496/B524.

[27] I mean here "theoretical" as opposed to "practical" discourse.

[28] To be sure, in order to make this reconciliation complete, the evidential and referential accounts would have to agree about whether or not the outright negations of the thesis and antithesis in the first antinomy can be legitimately asserted. However, I do not believe that his agreement would be difficult to achieve.

[29] Earlier versions of this paper were read at the Philosophy Colloquia of Columbia University and the University of Western Ontario. I am indebted to the participants of those colloquia, and in particular to Isaac Levi and William Harper, for helpful comments and suggestions. I am, as always, very grateful to Gordon Brittan for his intellectual and personal companionship. I hope that our conversation on the present topic will continue; so I will not respond at length here to his comments other than to mention that I address the points he raises in his section 6 in my "The Language of Appearances and Things-in-Themselves" (*Synthese*, 47, 1981) and "Automony, Omniscience, and the Ethical Imagination," forthcoming.