Mathematics Department, Princeton University

The $P(\varphi)_2$ Euclidean Quantum Field Theory as Classical Statistical Mechanics

Author(s): F. Guerra, L. Rosen and B. Simon

Source: *Annals of Mathematics*, Vol. 101, No. 1 (Jan., 1975), pp. 111-189
Published by: Mathematics Department, Princeton University
Stable URL: https://www.jstor.org/stable/1970988
Accessed: 28-02-2026 03:57 UTC

JSTOR is a not-for-profit service that helps scholars, researchers, and students discover, use, and build upon a wide range of content in a trusted digital archive. We use information technology and tools to increase productivity and facilitate new forms of scholarship. For more information about JSTOR, please contact support@jstor.org.

Your use of the JSTOR archive indicates your acceptance of the Terms & Conditions of Use, available at https://about.jstor.org/terms

Mathematics Department, Princeton University is collaborating with JSTOR to digitize, preserve and extend access to *Annals of Mathematics*

This content downloaded from 100.33.74.107 on Sat, 28 Feb 2026 03:57:10 UTC
All use subject to https://about.jstor.org/terms

The $P(\phi)_2$ Euclidean quantum field theory as classical statistical mechanics[1]

By F. GUERRA, L. ROSEN, and B. SIMON[2]

Because of its length, this paper is published in two parts: Part I consisting of Chapters I–III and Part II consisting of Chapters IV–VII and Appendices A–C. Part II will be found at the beginning of the next issue of this volume. An annotated Table of Contents appears in the Introduction beginning on page 116.

REFERENCES

[1] S. ALBEVERIO and R. HOEGH-KROHN, Uniqueness of the Physical Vacuum and the Wightman Functions in the Infinite Volume Limit for Some Non-Polynomial Interactions, Comm. Math. Phys. **30** (1973), 171–200.

[2] R. BAUMEL, Princeton University Thesis, in Preparation.

[3] F. A. BEREZIN, *The Method of Second Quantization*, Academic Press, New York, 1966.

[4] T. BERLIN and M. KAC, The Spherical Model of a Ferromagnet, Phys. Rev. **86** (1952), 821.

[5] J. BJORKEN and S. DRELL, *Relativistic Quantum Fields*, McGraw Hill, New York 1965.

[6] E. BREZIN, D. WALLACE, and K. WILSON, Feynman Graph Expansion for the Equation of State Near the Critical Point (Ising-like Case), Phys. Rev. Lett. **29** (1972), 591.

[7] J. M. COOK, The Mathematics of Second Quantization, Trans. Amer. Math. Soc. **74** (1953), 222–245.

[8] R. COURANT and D. HILBERT, *Methods of Mathematical Physics, Vol.* I, Interscience, New York, 1953.

[9] W. CRUTCHFIELD, Princeton University Senior Thesis, 1973.

[10] J. DIMOCK, Perturbation Series Asymptotic to Schwinger Functions in $P(\phi)_2$, Comm. Math. Phys. **35** (1974), 347–356.

[11] J. DIMOCK and J. GLIMM, Measures on the Schwartz Distribution Space and Applications to $P(\phi)_2$ Field Theories, N.Y.U. preprint, 1973.

[12] R. L. DOBRUSHIN, The Description of a Random Field by means of Conditional Probabilities and Conditions of its Regularity, Theory Prob. Applic. **13** (1968), 197–224.

[13] ———, Gibbsian Random Fields for Lattice Systems with Pairwise Interactions, Funct. Anal. Applic. **2** (1968), 292–301.

[14] ———, The Problem of Uniqueness of a Gibbsian Random Field and the Problem of Phase Transitions, Funct. Anal. Applic. **2** (1968), 302.

[15] ———, Gibbsian Random Fields, The General Case, Funct. Anal. Applic. **3** (1969), 22–28.

[16] J. L. DOOB, *Stochastic Processes*, Wiley, New York, 1953.

[17] N. DUNFORD and J. SCHWARTZ, *Linear Operators, Vol.* I, Interscience, New York, 1958.

[18] G. V. EFIMOV, Essentially Nonlinear Interaction Lagrangians and Nonlocalized Quantum Field Theory, Theor. Math. Phys. **2** (1970), 26–39.

[19] J. FELDMAN, A Relativistic Feynman-Kac Formula, Nuclear Phys. **B52** (1973), 608–614.

(1) Research partially supported by AFOSR under Contract F44620-71-C-0108

(2) A. Sloan Foundation Fellow

This content downloaded from 100.33.74.107 on Sat, 28 Feb 2026 03:57:10 UTC
All use subject to https://about.jstor.org/terms

[20] C. FORTUIN, P. KASTELEYN, and J. GINIBRE, Correlation Inequalities on Some Partially Ordered Sets, Comm. Math. Phys. **22** (1971), 89–103.

[21] E. S. FRADKIN, Application of Functional Methods in Quantum Field Theory and Quantum Statistics. I. Divergence-Free Field Theory with Local Non-Linear Interaction, Nuc. Phys. **49** (1963), 624–640.

[22] K. O. FRIEDRICHS, *Mathematical Aspects of the Quantum Theory of Fields*, Interscience, New York, 1953.

[23] I. GEL'FAND and G. SHILOV, *Generalized Functions, Vol. 1, Properties and Operations*, Academic Press, New York, 1964.

[24] I. GEL'FAND and N. VILENKIN, *Generalized Functions, Vol. 4, Applications of Harmonic Analysis*, Academic Press, New York, 1964.

[25] G. GALLAVOTTI, Instabilities and Phase Transitions in the Ising Model. A Review, Riv. Nuovo Cim. **2** (1972), 133–169.

[26] J. GINIBRE, Simple Proof and Generalization of Griffiths' Second Inequality, Phys. Rev. Lett. **23** (1969), 828–830.

[27] ———, General Formulation of Griffiths' Inequalities, Comm. Math. Phys. **16** (1970), 310–328.

[28] J. GLIMM, Boson Fields with Nonlinear Self-Interaction in Two Dimensions, Comm. Math. Phys. **8** (1968), 12–25.

[29] J. GLIMM and A. JAFFE, A $\lambda\phi^4$ Quantum Field Theory Without Cutoffs. I., Phys. Rev. **176** (1968), 1945–1951.

[30] ———, The $\lambda(\phi^4)_2$ Quantum Field Theory Without Cutoffs. II. The Field Operators and the Approximate Vacuum, Ann. of Math. **91** (1970), 362–401.

[31] ———, The $\lambda(\phi^4)_2$ Quantum Field Theory Without Cutoffs. III. The Physical Vacuum, Acta Math. **125** (1970), 203–261.

[32] J. GLIMM and A. JAFFE, Quantum Field Theory Models, in *Statistical Mechanics and Quantum Field Theory, Les Houches 1970*, C. DeWitt, R. Stora, Editors, Gordon and Breach New York, 1971.

[33] ———, The $\lambda(\phi^4)_2$ Quantum Field Theory Without Cutoffs. IV. Perturbations of the Hamiltonian, J. Math. Phys. **13** (1972), 1568–1584.

[34] ———, Boson Quantum Field Models, in *Mathematics of Contemporary Physics*, R. Streater, Editor, Academic Press, New York, 1972.

[35] J. GLIMM and T. SPENCER, The Wightman Axioms and the Mass Gap for the $P(\phi)_2$ Quantum Field Theory, N.Y.U. preprint, prelim. version of [121].

[36] R. GRIFFITHS, Correlation in Ising Ferromagnets, I, II, III, J. Math. Phys. **8** (1967), 478–483; 484–489; Comm. Math. Phys. **6** (1967), 121–127.

[37] ———, Rigorous Results for Ising Ferromagnets of Arbitrary Spin, J. Math. Phys. **10** (1969), 1559–1565.

[38] ———, Phase Transitions, in *Statistical Mechanics and Quantum Field Theory, Les Houches 1970*, C. DeWitt, R. Stora, Editors, Gordon and Breach, New York, 1971.

[39] R. GRIFFITHS, C. HURST, and S. SHERMAN, Concavity of Magnetization of an Ising Ferromagnet in a Positive External Field, J. Math. Phys. **11** (1970), 790–795.

[40] L. GROSS, Existence and Uniqueness of Physical Ground States, J. Funct. Anal. **10** (1972), 52–109.

[41] F. GUERRA, Uniqueness of the Vacuum Energy Density and van Hove Phenomenon in the Infinite Volume Limit for Two Dimensional Self-Coupled Bose Fields, Phys. Rev. Lett. **28** (1972), 1213.

[42] F. GUERRA, L. Rosen, and B. SIMON, Nelson's Symmetry and the Infinite Volume Behavior of the Vacuum in $P(\phi)_2$, Comm. Math. Phys. **27** (1972), 10–22.

[43] ———, The Vacuum Energy for $P(\phi)_2$: Infinite Volume Limit and Coupling Constant Dependence, Comm. Math. Phys. **29** (1973), 233–247.

[44] ———, Statistical Mechanics Results in the $P(\phi)_2$ Quantum Field Theory, Phys. Lett.

This content downloaded from 100.33.74.107 on Sat, 28 Feb 2026 03:57:10 UTC
All use subject to https://about.jstor.org/terms

44B (1973), 102-104.

[45] R. HAAG, N. HUGENHOLTZ, and M. WINNINK, On the Equilibrium States in Quantum Statistical Mechanics, Comm. Math. Phys. **5** (1967), 215-236.

[46] K. HEPP, *Theorie de la Renormalisation*, Springer-Verlag, 1969.

[47] ———, Progress in Quantum Field Theory, Lectures in International School of Subnuclear Physics, Erice 1972.

[48] R. HOEGH-KROHN, On the Spectrum of the Space Cutoff $:P(\phi):$ Hamiltonian in Two Space-Time Dimensions, Comm. Math. Phys. **21** (1971), 256-260.

[49] R. HOLLEY, Remarks on the FKG Inequalities, Comm. Math. Phys. **36** (1974), 227-232.

[50] G. JONA-LASINIO, Relativistic Field Theories with Symmetry-Breaking Solutions, Nuovo Cimento **34** (1964), 1790-1795.

[51] M. KAC, *Probability and Related Topics in Physical Sciences*, Interscience, New York, 1959.

[52] T. KATO, *Perturbation Theory for Linear Operators*, Springer-Verlag, New York, 1966.

[53] D. KELLY and S. SHERMAN, General Griffiths' Inequalities on Correlations in Ising Ferromagnets, J. Math. Phys. **9** (1968), 466-484.

[54] A. KLEIN, Quadratic Expressions in a Free Boson Field, Trans. A.M.S., **181** (1973), 439-456.

[55] J. KOGUT and K. WILSON, The Renormalization Group and the ϵ Expansion, Phys. Reports, to appear.

[56] O. LANFORD and D. RUELLE, Observables at Infinity and States with Short Range Correlations in Statistical Mechanics, Comm. Math. Phys. **13** (1969), 194-215.

[57] J. LEBOWITZ and A. MARTIN-LÖF, On the Uniqueness of the Equilibrium State for Ising Spin Systems, Comm. Math. Phys. **25** (1972), 276-282.

[58] J. LEBOWITZ and O. PENROSE, Analytic and Clustering Properties of Thermodynamic Functions and Distribution Functions for Classical Lattice and Continuum Systems, Comm. Math. Phys. **11** (1968), 99-124.

[59] H. LEFF, Correlation Inequalities for Coupled Oscillators, J. Math. Phys. **12** (1971), 569-578.

[60] E. LIEB, Models in Statistical Mechanics, in *Statistical Mechanics and Quantum Field Theory, Les Houches 1970*, C. DeWitt, R. Stora, Editors, Gordon and Breach, New York, 1971.

[61] T. NAKANO, Quantum Field Theory in terms of Euclidean Parameters, Prog. Theor. Phys. **21** (1959), 241-259.

[62] E. NELSON, Feynman Integrals and the Schrödinger Equation, J. Math. Phys. **5** (1964), 332-343.

[63] ———, A Quartic Interaction in Two Dimensions, in *Mathematical Theory of Elementary Particles*, R. Goodman and I. Segal, editors, M.I.T. Press, Cambridge, 1966.

[64] ———, *Topics in Dynamics*. I: *Flows*, Princeton University Press, 1969.

[65] ———, Time-ordered Operator Products of Sharp-time Quadratic Forms, J. Funct. Anal. **11** (1972), 211-219.

[66] ———, Quantum Fields and Markoff Fields, in *Proceedings of Summer Institute of Partial Differential Equations, Berkeley 1971*, A.M.S., Providence, 1973.

[67] ———, Construction of Quantum Fields from Markoff Fields, J. Funct. Anal. **12** (1973), 97-112.

[68] ———, The Free Markoff Field, J. Funct. Anal. **12** (1973), 211-227.

[69] ———, Lectures at 1973 Erice Summer School, appearing in *Constructive Quantum Field Theory*, G. Velo and A. S. Wightman, editors, Springer, 1973.

[70] C. NEWMAN, The Construction of Stationary Two-Dimensional Markoff Fields with an Application to Quantum Field Theory, J. Funct. Anal. **14** (1973), 44-61.

[71] M. O'CARROLL and P. OTTERSON, Some Aspects of Markov and Euclidean Field Theories,

This content downloaded from 100.33.74.107 on Sat, 28 Feb 2026 03:57:10 UTC
All use subject to https://about.jstor.org/terms

Comm. Math. Phys. **36** (1974), 37-72.

[72] K. Osterwalder and R. Schrader, On the Uniqueness of the Energy Density in the Infinite Volume Limit for Quantum Field Models, Helv. Phys. Acta **45** (1972), 746-754.

[73] ———, Euclidean Fermi and Bose Fields Feynman-Kac Formula, Phys. Rev. Lett. **29** (1972), 1423-1425.

[74] ———, Axioms for Euclidean Green's Functions, Comm. Math. Phys. **31** (1973), 83-112.

[75] A. Ostrowski, Determinanten mit überwiegender Hauptdiagonale und die absolute Konvergenz von linearen Iterationsprozessen, Comm. Helv. Math. **30** (1936), 175-210.

[76] D. Petrina and V. Skripnik, Kirkwood-Salzburg Equations for the Coefficient Functions of the S Matrix, Theor. Math. Phys. **8** (1971), 896-904.

[77] M. Reed and B. Simon, *Methods of Modern Mathematical Physics, Vol.* I, *Functional Analysis*, Academic Press, New York, 1972.

[78] ———, *Methods of Modern Mathematical Physics, Vol.* II, *Fourier Analysis, Self-Adjointness*, Academic Press, 1975.

[79] D. Robinson and D. Ruelle, Mean Entropy of States in Classical Statistical Mechanics, Comm. Math. Phys. **5** (1967), 288-300.

[80] L. Rosen, A $\lambda\phi^{2n}$ Field Theory Without Cutoffs, Comm. Math. Phys. **16** (1970), 157-183.

[81] ———, The $(\phi^{2n})_2$ Quantum Field Theory: Higher Order Estimates, Comm. Pure App. Math. **24** (1971), 417-457.

[82] ———, Renormalization of the Hilbert Space in the Mass Shift Model, J. Math. Phys. **13** (1972), 918-927.

[83] L. Rosen and B. Simon, The $(\phi^{2n})_2$ Field Hamiltonian with Complex Coupling Constant, Trans. A.M.S. **165** (1972), 365-379.

[84] D. Ruelle, A Variational Formulation of Equilibrium Statistical Mechanics and the Gibbs Phase Rule, Comm. Math. Phys. **5** (1967), 324-329.

[85] ———, *Statistical Mechanics*, Benjamin, New York, 1969.

[86] D. Ruelle, Superstable Interactions in Classical Statistical Mechanics, Comm. Math. Phys. **18** (1970), 127-159.

[87] L. I. Schiff, Lattice-Space Quantization of a Nonlinear Field Theory, Phys. Rev. **92** (1953), 766-779.

[88] J. Schwinger, On the Euclidean Structure of Relativistic Field Theory, Proc. Nat. Acad. Sci. **44** (1958), 956.

[89] J. Schwinger, Euclidean Quantum Electrodynamics, Phys. Rev. **115** (1959), 721-731.

[90] I. Segal, Tensor Algebras over Hilbert Spaces. I, Trans. A.M.S. **81** (1956), 106-134.

[91] ———, Foundations of the Theory of Dynamical Systems of Infinitely Many Degrees of Freedom. I, Mat. Fys. Medd. Dansk. Vid. Selsk. **31**, No. 12 (1959); II, Can. J. Math. **13** (1961), 1-18.

[92] ———, Mathematical Characterization of the Physical Vacuum for a Linear Bose-Einstein Field, Ill. J. Math. **6** (1962), 500-523.

[93] ———, Nonlinear Functions of Weak Processes, I, J. Funct. Anal. **4** (1969), 404-451.

[94] ———, Construction of nonlinear local quantum processes. I, Ann. of Math. **92** (1970), 462-841.

[95] Yu. A. Semenov, On the Lie-Trotter Theorems in L_p-Spaces, Kiev Preprint, 1972.

[96] D. Shale, Linear Symmetries of Free Boson Fields, Trans. A.M.S. **103** (1962), 149-167.

[97] T. Spencer, Perturbation of the $P(\phi)_2$ Quantum Field Hamiltonian, J. Math. Phys. **14** (1973), 823-828.

[98] B. Simon, Determination of Eigenvalues by Divergent Perturbation Series, Adv. Math. **7** (1971), 240-253.

This content downloaded from 100.33.74.107 on Sat, 28 Feb 2026 03:57:10 UTC
All use subject to https://about.jstor.org/terms

[99] ———, On the Glimm-Jaffe Linear Lower Bound in $P(\phi)_2$ Field Theories, J. Funct. Anal. **10** (1972), 251-258.

[100] ———, Essential Self-Adjointness of Schrödinger Operators with Positive Potentials, Math. Ann. **201** (1973), 211-220.

[101] ———, Studying Spatially Cutoff $(\phi^{2n})_2$ Hamiltonians, in *Statistical Mechanics and Field Theory*, R. N. Sen and C. Weil, Editors, Wiley, New York, 1972.

[102] ———, Ergodic Semigroups of Positivity Preserving Self-Adjoint Operators, J. Funct. Anal. **12** (1973), 335-339.

[103] ———, Correlation Inequalities and the Mass Gap in $P(\phi)_2$. I. Domination by the Two Point Function, Comm. Math. Phys. **31** (1973), 127-136.

[104] ———, Correlation Inequalities and the Mass Gap in $P(\phi)_2$. II. Uniqueness of the Vacuum for a Class of Strongly Coupled Theories, Ann. of Math., **101** (1975), No. 2.

[105] B. SIMON and R. GRIFFITHS, The $(\phi^4)_2$ Field Theory as a Classical Ising Model, Comm. Math. Phys. **33** (1973), 145-164.

[106] B. SIMON and R. HOEGH-KROHN, Hypercontractive Semigroups and Two Dimensional Self-Coupled Bose Fields, J. Funct. Anal. **9** (1972), 121-180.

[107] T. J. STIELTJES, Sur les Racines de l'equation $X_n = 0$, Acta Math. **9** (1887), 385-400.

[108] R. STREATER and A. S. WIGHTMAN, PCT, *Spin and Statistics and All That*, Benjamin, New York, 1964.

[109] K. SYMANZIK, A Modified Model of Euclidean Quantum Field Theory, N.Y.U. Preprint, 1964 (unpublished).

[110] ———, Euclidean Quantum Field Theory. I. Equations for a Scalar Model, J. Math. Phys. **7** (1966), 510-525.

[111] ———, Euclidean Quantum Field Theory, in *Local Quantum Theory, Proceedings of the International School of Physics "Enrico Fermi", Course 45*, R. Jost, Editor, Academic Press, New York, 1969.

[112] B. SZ.-NAGY and C. FOIAS, *Harmonic Analysis of Operators on Hilbert Space*, North-Holland, London, 1970.

[113] S. R. S. VARADHAN, *Stochastic Processes*, N.Y.U. Lecture notes, 1968.

[114] M. WEINLESS, Existence and Uniqueness of the Vacuum for Linear Quantized Fields, J. Funct. Anal. **4** (1969), 350-379.

[115] G. WENTZEL, Zum Problem des Statischen Mesonfeldes, Helv. Phys. Acta **13** (1940), 269-308.

[116] A. S. WIGHTMAN, What is the Point of So-Called 'Axiomatic Field Theory'?, Phys. Today **22** (1969), 53-58.

[117] ———, Constructive Field Theory. Introduction to the Problems, in *Fundamental Problems in Physics and Astrophysics*, Plenum, New York, 1973.

[118] K. WILSON and M. FISHER, Critical Exponents in 3.99 Dimensions, Phys. Rev. Lett. **28** (1972), 240-243.

[119] R. L. DOBRUSHIN and R. A. MINLOS, Construction of a One-Dimensional Quantum Field via a Continuous Markov Field, Func. Anal. and Appl. (Russian), to appear.

[120] J. P. ECKMANN, Hypercontractivity for Anharmonic Oscillators, Geneva, Preprint, 1973.

[121] J. GLIMM, A. JAFFE, and T. SPENCER, The Wightman axioms and the particle structure in the $P(\phi)_2$ quantum field model, Ann. of Math. **100** (1974), 585-632.

[122] ———, The Particle Structure of the Weakly Coupled $P(\phi)_2$ Model and Other Applications of High Temperature Expansions, II: The Cluster Expansion, in *Constructive Quantum Field Theory*, ed. G. Velo and A. S. Wightman, Springer-Verlag, 1973.

[123] F. GUERRA, Bose Quantum Field Theory as Classical Statistical Mechanics I. The Variational Principle and the Equilibrium Equations, in *Constructive Quantum Field Theory*, ed. G. Velo and A. S. Wightman, Springer-Verlag, 1973.

[124] F. GUERRA, L. ROSEN, and B. SIMON, Correlation Inequalities and the Mass Gap in $P(\phi)_2$, III. Mass Gap for a Class of Strongly Coupled Theories, in preparation.

This content downloaded from 100.33.74.107 on Sat, 28 Feb 2026 03:57:10 UTC
All use subject to https://about.jstor.org/terms

[125] ———, Boundary Conditions in the $P(\phi)_2$ Euclidean Quantum Field Theory, in preparation.
[126] J. ROSEN, *Logarithmic Sobolev Inequalities and Supercontractivity for Anharmonic Oscillators*, Princeton University Thesis, 1974.
[127] B. SIMON, *The $P(\phi)_2$ Euclidean (Quantum) Field Theory*, Princeton University Press, 1974.
[128] J. P. ECKMANN, J. MAGNEN and R. SENEOR, Decay Properties and Borel Summability for the Schwinger Functions in $P(\phi)_2$ Theories, Commun. Math. Phys. to appear.
[129] K. OSTERWALDER and O. SCHRADER, Manuscript in Preparation.

Part I

I. Introduction

In the last decade there has been considerable progress in the areas of constructive quantum field theory and rigorous statistical mechanics. Both disciplines, as studies of physical systems with an infinite number of degrees of freedom, are concerned with the same sorts of questions, for example, the existence of the infinite volume limit, and the uniqueness of the physical states obtained. Thus the developments in field theory and statistical mechanics have often been parallel and some of the methods have been shared (especially the techniques of C^*-algebras). But the subjects have not really cross-fertilized each other to any noticeable extent.

This paper is based on the idea that the *Euclidean* $P(\phi)_2$ field theory for two-dimensional massive self-coupled Bose fields is nothing more nor less than a model of classical mechanics. The continuation of the usual relativistic $P(\phi)_2$ model to the Euclidean region, by allowing a direct use of functional integration, not only introduces remarkable technical simplifications, but also makes it possible to decide the basic physical questions (broken symmetry, dynamical instability [116], etc.) in the spirit and language of statistical mechanics. Our discussion is reasonably self-contained, but for an understanding of the traditional constructive field theory program as advanced by Glimm and Jaffe and their followers, we refer the reader to [32] and the references cited there. Our basic reference for the ideas and methods of statistical mechanics will be Ruelle's book [85].

On occasion there have been discussions in the literature of a direct analogy between field theory and quantum statistical mechanics at zero temperature. For example, Hepp [47] has considered the analogy between the $P(\phi)_2$ field theory and a Heisenberg ferromagnet in one dimension. In this paper we consider the deeper analogy between quantum field theory analytically continued to imaginary time [89] (Euclidean quantum field

This content downloaded from 100.33.74.107 on Sat, 28 Feb 2026 03:57:10 UTC
All use subject to https://about.jstor.org/terms

theory) and *classical* statistical mechanics at finite temperatures. For a number of years it had been realized (e.g., [50]) that there was a correspondence between field theory and statistical mechanics based on the similarity between the Gell'Mann-Low formula [5], [46] of quantum field theory,

$$\begin{aligned}&(\Omega_\lambda,\ T(\phi_\lambda(x_1,\ t_1)\cdots\phi_\lambda(x_n,\ t_n))\Omega_\lambda)\\&\quad=\frac{(\Omega_0,\ T(\phi_0(x_1,\ t_1)\cdots\phi_0(x_n,\ t_n)e^{-i\lambda\int H_I(\phi_0(x,t))dxdt})\Omega_0)}{(\Omega_0,\ T(e^{-i\lambda\int H_I(\phi_0(x,t))dxdt})\Omega_0)}\ ,\end{aligned}$$

and the usual Gibbs formula of statistical mechanics,

$$\langle A\rangle_\beta=\frac{\langle Ae^{-\beta H_I}\rangle_0}{\langle e^{-\beta H_I}\rangle_0}\ .$$

It was Symanzik [110], [111] who first emphasized the usefulness of this correspondence by passing to the Euclidean region, and this idea has since been developed by a number of other authors [18], [21], [76]. Symanzik undertook a systematic study of Euclidean field theory, basing his analogy with classical statistical mechanics on the Kirkwood-Salsburg equations [85]. But he was unable to recover the relativistic theory from the Euclidean one, nor was he able to control the infinite volume limit (compare what little technology was available at the time concerning the thermodynamic limit in rigorous statistical mechanics). Nevertheless, recent developments have proved that the program envisaged by Symanzik was a sound one.

Because the connection between Euclidean field theory and the relativistic Hamiltonian theory had not been established on a rigorous basis, it was not possible to exploit the above ideas in constructive field theory. Recent work of Nelson [66], [67], [68] has dramatically altered the situation, making Euclidean techniques available as a powerful constructive tool. Nelson isolated the important Markov property (noted by Symanzik in [109]), and for Euclidean field theories with this property he showed how to continue analytically back to a relativistic theory (for a statement of the Nelson Reconstruction Theorem see Theorem II.8 below). It is our goal in this paper to use Nelson's ideas as the basis for a discussion of the statistical mechanics of the $P(\phi)_2$ model. Shortly after the announcement of our results [44], we learned that Albeverio and Hoegh-Krohn [1] had also used Nelson's ideas together with statistical mechanics methods in order to study the infinite volume limit in a field-theoretic model with a bounded interaction. In a recent significant paper [74], Osterwalder and Schrader

This content downloaded from 100.33.74.107 on Sat, 28 Feb 2026 03:57:10 UTC
All use subject to https://about.jstor.org/terms

have produced a set of axioms for the Euclidean Green's functions which are necessary and sufficient conditions that they be the analytic continuations of the Wightman functions of a relativistic theory. What is perhaps surprising is that they do not need to assume that Euclidean fields exist or that there is any property like the Markov property. We emphasize that our discussion of the statistical mechanical nature of the Euclidean theory relies critically on the additional structure provided by Euclidean fields and their Markov property.

In Section II.1 we begin by reviewing Nelson's construction of the free Euclidean Markov field: The field $\phi(x)$ is viewed as a (formal) family of Gaussian random variables labelled by $x \in \mathbf{R}^d$, and the underlying probability space Q carries a suitable Gaussian measure $d\mu_0$. Of course, the fields $\phi(x)$ commute. There is a natural embedding of the relativistic Fock space $\mathcal{F}$ in $s = d-1$ space dimensions as a constant "time" subspace of $L^2(Q, d\mu_0)$ and this leads to the Feynman-Kac-Nelson formula relating the relativistic $P(\phi)_{1+1}$ theory on $\mathcal{F}$ to the Euclidean $P(\phi)_2$ theory on $L^2(Q, d\mu_0)$ (of Theorem II.16). In particular, we obtain this imaginary time Gell'Mann-Low formula: For $t_1 \leqq t_2 \leqq \cdots \leqq t_n$,

$$\begin{aligned}(\mathrm{I.1})\qquad &\left(\Omega_l,\ \phi_F(x_n)e^{-(t_n-t_{n-1})\hat{H}_l}\phi_F(x_{n-1}) \cdots e^{-(t_2-t_1)\hat{H}_l}\phi_F(x_1)\Omega_l\right)\\ &= \lim_{t\to\infty} \frac{\int_Q d\mu_0 \phi(x_1, t_1) \cdots \phi(x_n, t_n) e^{-\int_{-t/2}^{t/2}\int_{-l/2}^{l/2} :P(\phi(x,s)):dx\,ds}}{\int_Q d\mu_0 e^{-\int_{-t/2}^{t/2}\int_{-l/2}^{l/2} :P(\phi(x,s)):dx\,ds}}.\end{aligned}$$

On the left side all objects are associated with the relativistic Fock space $\mathcal{F}$: $\phi_F(x)$ is the time-zero relativistic field on $\mathcal{F}$,

$$(\mathrm{I.2})\qquad \hat{H}_l = H_0 + \int_{-l/2}^{l/2} :P(\phi_F(x)):dx - E_l$$

is the spatially cutoff Hamiltonian on $\mathcal{F}$, and Ω_l is its unique vacuum vector, $\hat{H}_l\Omega_l = 0$. The expressions on the right side are in terms of the Euclidean field on Q.

Note that the problem of the infinite volume limit is "half solved" in the right side of (I. 1), and that if we could also take $l \to \infty$ then it would follow that the vacuum expectation values for the relativistic $P(\phi)_{1+1}$ theory would also converge as $l \to \infty$ (cf. [35]). It is convenient to consider regions $\Lambda \subset \mathbf{R}^2$ that are more general than rectangles and thus the basic objects under consideration are the spatially cutoff *Schwinger functions* in volume Λ,

This content downloaded from 100.33.74.107 on Sat, 28 Feb 2026 03:57:10 UTC
All use subject to https://about.jstor.org/terms

$$S_\Lambda(\vec{x}_1, \cdots, \vec{x}_n) = \frac{\int d\mu_0 \phi(\vec{x}_1) \cdots \phi(\vec{x}_n) e^{-U_\Lambda}}{\int d\mu_0 e^{-U_\Lambda}}, \tag{I.3}$$

where $\vec{x}_1, \cdots, \vec{x}_n \in \mathbf{R}^2$ and $U_\Lambda = \int_\Lambda :P(\phi(\vec{x})): d^2x$. The central problem is to prove the existence of the thermodynamic limit, $\Lambda \to \infty$.

The structure of our classical statistical mechanics model is now apparent:

Configuration space	Q
Free expectations	$\langle A \rangle_0 = \int A d\mu_0$
Basic observables	$\phi(x)$
Gibbs' expectation in Λ	$\langle A \rangle = \int A e^{-U_\Lambda} d\mu_0 \Big/ \int e^{-U_\Lambda} d\mu_0$
Partition function in Λ	$Z_\Lambda = \int e^{-U_\Lambda} d\mu_0$
Pressure in Λ	$p_\Lambda = \frac{1}{\lvert \Lambda \rvert} \log Z_\Lambda$
Correlation functions in Λ	$S_\Lambda(x_1, \cdots, x_n)$
State f	Family $\{f_\Lambda\}$ of positive, normalized consistent densities on Q
Entropy in Λ of state f	$S_\Lambda(f) = -\int d\mu_0 f_\Lambda \log f_\Lambda$

It will turn out that the nature of this model is determined largely by the properties of the *free* measure $d\mu_0$. A Gaussian measure $d\mu$ on Q is defined by specifying its mean (taken to be 0) and its covariance,

$$\int d\mu \phi(x)\phi(y) = \mathrm{Cov}(x, y), \tag{I.4}$$

which we shall generally take to be the Green's function for the operator $(-\Delta + m^2)$ with some choice of boundary conditions. Since operators of the type $(-\Delta + m^2)^{-1}$ are nonlocal, the measures $d\mu$ will be *nonlocal*, i.e., observables $\phi(x)$ and $\phi(y)$ will *not* in general be independent if $x \neq y$. On the other hand, the interaction U_Λ is local in the sense that $U_{\Lambda_1 \cup \Lambda_2} = U_{\Lambda_1} + U_{\Lambda_2}$ for disjoint Λ_1, Λ_2. This situation is just the reverse of that usually encountered in classical statistical mechanics. There, the coupling between different regions is due purely to the interaction, whereas in Euclidean field theory the coupling between regions is produced by the

This content downloaded from 100.33.74.107 on Sat, 28 Feb 2026 03:57:10 UTC
All use subject to https://about.jstor.org/terms

basic coupling in the free theory *mediated* by the interaction. A further determining feature of $d\mu_0$ is that it is *ferromagnetic* and of *nearest neighbour* type, and these properties will become evident when we consider the lattice approximation to the model in Section IV. As a result, our model is very close in behaviour to the standard Ising ferromagnet.

As in classical statistical mechanics, we expect that the freedom to employ a variety of boundary conditions (B. C.) will be a useful technical device. The effect of Dirichlet type B. C. on $\partial\Lambda$ in decoupling the fields in Λ from those in Λ^{ext} has already played an important role in the work of Glimm and Spencer [35] and of Nelson [69]. In this paper we employ primarily the two most natural types of B. C.: free B. C. and Dirichlet B. C. In the case of free B. C., the covariance (I.4) is taken to be the free Green's function for $(-\Delta + m^2)$ vanishing at ∞:

$$\int d\mu_0\phi(x)\phi(y) = G_0(x, y) \equiv (2\pi)^{-d}\int e^{ip\cdot(x-y)}(p^2 + m^2)^{-1}d^dp\,.$$

For Dirichlet B. C. on $\partial\Lambda$ the measure is defined in terms of the Green's function with vanishing data on $\partial\Lambda$: $\int d\mu^D_{0,\Lambda}\phi(x)\phi(y) = G_{D,\Lambda}(x, y)$.

In a subsequent paper we plan to present an analysis of more general B. C. (but see § II.5 below for such an analysis when $d = 1$). We expect that the role of boundary conditions will take on added significance when there are several distinct infinite volume states (dynamical instability).

At this point it might be helpful to summarize the relations among the various $P(\phi)_2$ theories that we shall consider in this paper:

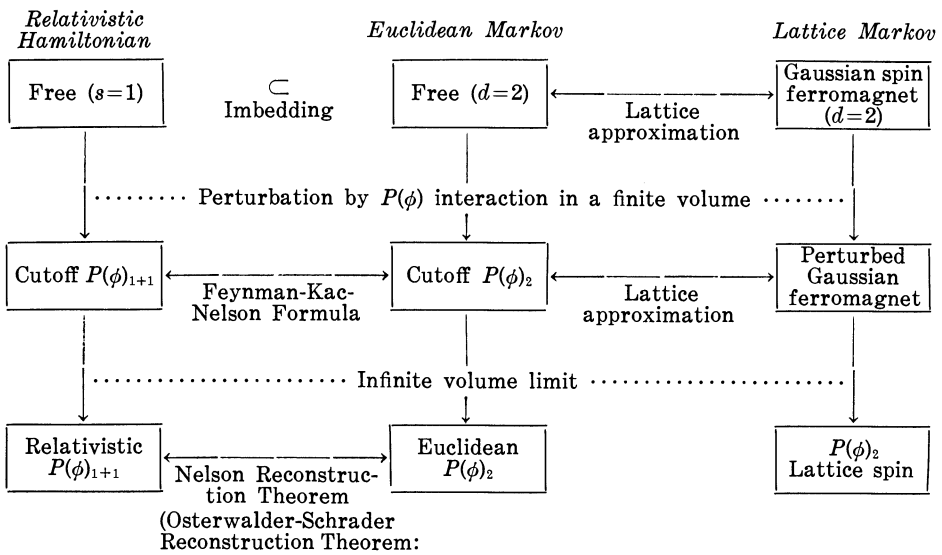

FIGURE I.1

This content downloaded from 100.33.74.107 on Sat, 28 Feb 2026 03:57:10 UTC
All use subject to https://about.jstor.org/terms

The traditional route to a relativistic field theory without cutoffs consisted of proceeding down the first column of Fig. I.1 [32]. The statistical mechanics approach is to move down the middle column by taking advantage of information from the third column, and then to appeal to the Nelson Reconstruction Theorem [67] or to Osterwalder-Schrader [74]*. Although less direct, the Euclidean route has distinct advantages (see also [35])!

The contents and organization of this paper are as follows:

II. Markov fields, page 129.

1. *The Free Markov Field.* We review Nelson's construction of the free field.

2. *Nelson's Axioms for Euclidean Markov Fields.* We discuss Nelson's axioms and his method of obtaining the relativistic Hamiltonian from the Euclidean Markov theory, the key step in the proof of the Reconstruction Theorem.

3. *The Spatially Cutoff $P(\phi)_2$ Markov Theory.* We define the cutoff $P(\phi)_2$ Markov theory and show how to recover from it most of the known results for the spatially cutoff $P(\phi)_2$ Hamiltonian. This involves our first proof of the Feynman-Kac-Nelson formula and identifies the Euclidean theory as *path space* over the relativistic theory.

4. *The Feynman-Kac-Nelson Formula: A Second Proof.* This second proof starts from the relativistic Hamiltonian theory and follows the lines of the "classical" proof. As a corollary, we obtain the Gell'Mann-Low formula (I.1) which identifies the Hamiltonian theory as a *transfer matrix* for the Euclidean theory.

5. *Conditioned Theories.* We introduce a procedure, involving positive definiteness relations, for obtaining one theory from another by projecting out certain degrees of freedom. In particular, since the difference $G_0 - G_{D,\Lambda}$ is positive definite as an operator on $L^2(\Lambda)$, this method applies to obtaining the Dirichlet theory from the free B. C. theory. The method also allows an analysis of general B. C. when $d = 1$.

6. *Dirichlet Boundary Conditions.* Dirichlet B. C. in Λ can also be obtained from free B. C. by an appropriate insertion of δ-functions on the

* There is a gap in [74]; alternate procedures utilizing similar axiom schemes are discussed in [129].

This content downloaded from 100.33.74.107 on Sat, 28 Feb 2026 03:57:10 UTC
All use subject to https://about.jstor.org/terms

boundary $\partial\Lambda$. We make the important distinction between the "full-Dirichlet" and "half-Dirichlet" theories, according to whether the interaction is Wick-ordered relative to $d\mu^D_{0,\Lambda}$ or to $d\mu_0$.

III. L^p-Estimates, page 175.

1. *Hypercontractive Estimates.* Although $d\mu_0$ couples distinct regions, we obtain L^p-estimates which express the "exponential decoupling" of distant regions.

2. *Sandwich and Checkerboard Estimates.* These estimates apply to particular geometric configurations of regions and are useful in the study of the relativistic Hamiltonian and of the entropy (§ VI).

3. *Hypercontractivity and the Mass Gap.* We note that the above estimates imply a mass gap in the Hamiltonian theory, but the problem remains to obtain hypercontractive estimates *uniform* in the spatial cutoff.

IV. Lattice Markov fields, page 191.

1. *The Lattice Approximation.* Based on the finite difference approximation to $(-\Delta + m^2)$, the lattice approximation to the spatially cutoff $P(\phi)_2$ Markov theory consists of an array of Gaussian spins on lattice sites.

2. *Properties of the Lattice Theory.* We isolate the ferromagnetic and nearest neighbour (= Markov) nature of the lattice approximation. B. C. enter in the manner in which the boundary spins are coupled to one another.

3. *Dirichlet Boundary Conditions.* The special status of Dirichlet B. C. is investigated; that is, the boundary spins have no couplings beyond those produced by $d\mu_0$. We prove that the lattice approximations for the full- and half-Dirichlet theories converge in the continuum limit.

4. *The Lattice Theory as an Ising Ferromagnet.* We remark that the lattice approximation is just a continuous spin Ising ferromagnet whose nature is determined chiefly by the free measure: The interaction is local and thus does not affect the coupling between spins but only the distribution of each uncoupled spin.

V. Correlation inequalities, page 206.

1. *Gaussian Measures of Ferromagnetic Type.* We prove correlation inequalities of Griffiths [38] and FKG [20] type for a class of measures on $\mathbf{R}^n$ which includes the measures of § IV.

2. *Correlation Inequalities for Markov Fields.* In the continuum limit these inequalities transfer to inequalities for the Schwinger functions (I.3)

This content downloaded from 100.33.74.107 on Sat, 28 Feb 2026 03:57:10 UTC
All use subject to https://about.jstor.org/terms

of the $P(\phi)_2$ Markov theory. For example, if P is *even* (and semibounded), then

$$S_\Lambda(x_1, \cdots, x_n) \geqq 0 ,$$
$$S_\Lambda(x_1, \cdots, x_{n+m}) \geqq S_\Lambda(x_1, \cdots, x_n)S_\Lambda(x_{n+1}, \cdots, x_{n+m}) ,$$

where $x_j \in \mathbf{R}^2$.

3. *Correlation Inequalities for Wick Powers.* The fact that the interaction U_Λ involves Wick powers limits the applicability of the correlation inequalities (and is responsible for the above restriction to even P). Inequalities involving Wick powers would be very useful but we are able to handle only a single quadratic power $:\phi^2(x):$. We speculate on other possible inequalities and disprove some of these. One such disproof depends on the independently interesting theorem that, for small coupling constant and $P(\phi) = \phi^4$, the Hamiltonian (I.2) has an eigenvalue in the "gap" $(0, m)$.

4. *Applications.* In analogy with statistical mechanics, we apply the correlation inequalities to deduce monotonicity statements in terms of the coefficients of ϕ and ϕ^2 in $P(\phi)$ for (i) the correlation functions, (ii) the mass gap, and (iii) the "Bogoliubov parameters" measuring broken symmetry. We discuss Nelson's result [69] that the Schwinger functions for the half-Dirichlet states are monotonically increasing in the volume and thus converge in the infinite volume limit; we explain how a change in "local bare mass" is involved.

VI. The basic objects of statistical mechanics, page 228.

1. *The Pressure.* We show that, as $\Lambda \to \infty$, the pressure p_Λ converges to α_∞, the vacuum energy per unit volume in the Hamiltonian theory, and the Dirichlet pressure p_Λ^D converges to a limit α_∞^D. We investigate the (lack of) dependence of the pressure on B. C. in a subsequent paper.

2. *States and Entropy.* We define the notions of state and entropy of a state and we show that the entropy $S_\Lambda(f)$ has the usual property of monotonicity in Λ, but, because of the nonlocality of $d\mu_0$, satisfies only a weak form of subadditivity in Λ.

3. *Convergence of the Entropy per Unit Volume.* As $\Lambda \to \infty$, the limit $s(f) = \lim (1/|\Lambda|)S_\Lambda(f)$ exists if f is a translation invariant, "weakly tempered" state.

VII. Equilibrium and Variational Equations, page 238.

1. *The* DLR *Equations.* In analogy to the equilibrium equations of

This content downloaded from 100.33.74.107 on Sat, 28 Feb 2026 03:57:10 UTC
All use subject to https://about.jstor.org/terms

statistical mechanics (cf. Dobrushin [13], Lanford-Ruelle [56]), we introduce DLR equations for the $P(\phi)_2$ Markov theory. These equations express the fact that, for every compact Λ, the density is Gibbsian, $f_\Lambda = e^{-U_\Lambda}\psi_{\partial\Lambda}$, except for a "correction" $\psi_{\partial\Lambda}$ concentrated on the boundary $\partial\Lambda$. We discuss the equivalence of theories with different bare masses.

2. *Spurious Solutions of the* DLR *Equations and Boundary Conditions at Infinity.* By an explicit one-dimensional example we show that the DLR equations admit nonphysical solutions and must be supplemented by a B. C. at ∞. We propose that weak temperedness is the "right" B. C.

3. *Gibbs Variational Principle: Partial Results.* If we denote the mean value of the interaction in the state f by $\rho(f, P)$, then we prove the Gibbs variational inequality: $s(f) - \rho(f, P) \leqq \alpha_\infty(P)$; but we are unable to prove that there is a state f for which equality holds. We conjecture that equality holds if and only if f is a weakly tempered, translation invariant state which satisfies the DLR equations. Our analysis further indicates that the Gibbs variational principle is the statistical mechanics counterpart of the Rayleigh-Ritz variational principle of the relativistic theory, and that the entropy is a free energy density.

Appendix A. *Positive Definite Matrices with Nonpositive Off-Diagonal Elements.* We summarize a few properties of a class of matrices which includes those occurring in § IV.

Appendix B. *Correlation Inequalities for the Anharmonic Oscillator: Alternate Proofs.* For one-dimensional $P(\phi)$ theories it is possible to prove correlation inequalities without recourse to the lattice approximation.

Appendix C. *Fisher Convergence: Some Technical Results.* We establish some facts of a geometric nature concerning convergence of Λ to infinity in the sense of Fisher.

The reader can thus see that after the partially expository material of §§ II.1–II.4, there are four (partly overlapping) main lines of technical development:

1. *Analysis of* B. C. This appears in §§ II.5, II.6, and IV.3 and will be continued in a subsequent paper.

2. *Ferromagnetic properties.* This line involves the lattice approximation of § IV and the correlation inequalities of § V and is independent of § III and depends on § II.5 only through a simple convergence theorem.

3. *Convergence of the pressure.* These results extend our earlier work

This content downloaded from 100.33.74.107 on Sat, 28 Feb 2026 03:57:10 UTC
All use subject to https://about.jstor.org/terms

[41], [42], [43] on the convergence of the energy per unit volume and appear in § VI.1 which depends heavily on § II.5 but not on §§ III–V.

4. *Entropy and variational equations.* This line appears in §§ VI.2, VI.3, and VII and depends heavily on the L^p-estimates of § III.

We have not organized the paper with these four lines of development in sequential order but rather with two principles in mind: We wished to develop the purely technical estimates first (§§ II.5–V.1), and we organized the remaining material in a way which we considered natural from the point of view of statistical mechanics.

There is a connection between our discussion of the lattice approximation and some recent work of Wilson [6], [55], [118] on the renormalization group in statistical mechanics. Basic to our approach is that a field theory is well-approximated by Ising models. Basic to Wilson's approach is the idea that an Ising model can be well-approximated by field theories. These two statements are of course not identical. In fact, one can only hope to approximate discrete systems by continuous systems (Wilson's approach) when typical distances are large compared to a lattice spacing (i. e., near critical points) and rigorous results seem hard to obtain. On the other hand, one can always hope to approximate continuous systems by discrete systems (our approach). In any event, both approaches depend on a similarity of structure between Ising models and field theories.

We regard the primary role of this paper to be that of establishing a basic framework and technique. It thus seems fitting to conclude this introduction with a list of open questions that strike us as important or natural. For a more complete explanation of the notation and context of these problems, the reader should consult the relevant sections of the text.

The first two problems are Euclidean formulations of problems that exist for the relativistic Hamiltonian theory, but, because of the explicit form of the Euclidean vacuum, we expect that they are more tractable:

Problem 1. Prove local L^p estimates on the vacuum. Explicitly, for a given interaction polynomial P and regions $\Lambda \subset \Lambda' \subset \mathbf{R}^2$, let $v_{\Lambda,\Lambda'}$ be the (normalized) restriction of the Gibbs state in Λ' to the region Λ: $v_{\Lambda,\Lambda'} = E_\Lambda[e^{-U_{\Lambda'}}]\Big/\int d\mu_0 e^{-U_{\Lambda'}}$. Prove that for some fixed $p > 1$, $\| v_{\Lambda,\Lambda'} \|_p$ is bounded independently of Λ'. Conjecture: $\log \| v_{\Lambda,\Lambda'} \|_p = O(|\Lambda|)$.

Such a bound would provide a new proof of the locally Fock property [32] of the infinite volume (Hamiltonian) states and would imply the existence of infinite volume, equal time, vacuum expectation values.

This content downloaded from 100.33.74.107 on Sat, 28 Feb 2026 03:57:10 UTC
All use subject to https://about.jstor.org/terms

Problem 2. Prove local L^p convergence of the Gibbs states; i.e., for fixed Λ, $v_{\Lambda,\Lambda'}$ converges in L^p as $\Lambda' \to \infty$.

For small coupling constant, Glimm and Spencer [35] have proved local convergence of the $v_{\Lambda,\Lambda'}$ in the sense that the Schwinger functions (I.3) converge. For half-Dirichlet B. C. and even P, Nelson [69] has obtained this result using an extension of some of our ideas in § V. The small coupling result of Glimm and Spencer is the analogue of high temperature results in classical statistical mechanics. This suggests:

Problem 3. Give an alternate proof of the Glimm-Spencer result using a Kirkwood-Salzburg [85] or Dobrushin [14] type of argument.

In addition Glimm and Spencer prove that there is a positive mass gap in the small coupling regime. Such a result would follow from:

Problem 4. Prove that for small coupling constant the measure $d\nu_\Lambda = e^{-U_\Lambda} d\mu_0 \Big/ \int e^{-U_\Lambda} d\mu_0$ is hypercontractive in the sense of § III, uniformly in Λ.

The following mass gap result is suggested by a theorem of Lebowitz and Penrose [58] on the fall-off of the Ursell functions in a finite range Ising model at non-zero magnetic field:

Problem 5. Let P be an even polynomial, and let $\lambda \neq 0$. Prove the existence of a positive mass gap for the $P(X) + \lambda X$ theory.

Again in analogy with high temperature results of classical statistical mechanics we propose (see § VII):

Problem 6. Find suitable boundary conditions at infinity under which the DLR equations for a small coupling $P(\phi)_2$ theory have a unique solution.

We know (cf. § VII.2) that without B. C. at ∞, the DLR equations have spurious solutions. The DLR equations are connected with the Gibbs variational principle for which we are able to establish only the inequality portion:

Problem 7. For any $P(\phi)_2$ theory, prove the Gibbs variational *equality*: $\sup_f [s(f) - \rho(f, P)] = \alpha_\infty(P)$.

Problem 8. Prove that the Gibbs variational equality and the DLR equations with suitable B. C. at ∞ provide equivalent characterizations of equilibrium states.

We mention two problems involving correlation inequalities. The first would imply monotonicity of the Hamiltonian energy per unit volume (for further conjectures concerning Wick powers, see § V.3):

This content downloaded from 100.33.74.107 on Sat, 28 Feb 2026 03:57:10 UTC
All use subject to https://about.jstor.org/terms

Problem 9. Let P be an even semibounded normalized polynomial $(P(0) = 0)$. Prove that $\langle :P(\phi(x)):\rangle \leqq 0$ where $\langle\cdot\rangle$ denotes expectation with respect to a $P(\phi)_2$ Gibbs state.

Problem 10. Let P be an even semibounded polynomial. Prove (or disprove) triple correlation inequalities of GHS type [39]:

$$\langle ABC\rangle + 2\langle A\rangle\langle B\rangle\langle C\rangle \leqq \langle A\rangle\langle BC\rangle + \langle AB\rangle\langle C\rangle + \langle AC\rangle\langle B\rangle ,$$

where A, B, C are products of fields of the form $\phi(x_1)\cdots\phi(x_n)$.

As discussed in § VI.1 the pressure should be independent of the type of B. C. used.

Problem 11. Establish that as $\Lambda \to \infty$ the pressure $p_\Lambda^{(\sigma)}$ converges to α_∞, whatever the choice of B. C., σ (e.g., periodic, Dirichlet, Neumann). This should imply that the periodic (Dirichlet, Neumann) Hamiltonian energy per unit volume converges to $-\alpha_\infty$.

Then there are questions involving the perturbation series. The Euclidean Markov framework is a natural one for discussing the Feynman series since formally the series arise from an expansion of the exponential in the Feynman-Kac-Nelson formula. This "derivation" of the Feynman series is close in spirit to the original Feynman idea and quite far from the usual Dyson interaction picture derivation [5].

Problem 12. Prove that in the infinite volume limit the Feynman series for the pressure (energy per unit volume, cf. [43]) and the Schwinger functions are asymptotic.

Problem 13. Prove that the series of Problem 12 are Borel summable ([98], [83]).

Finally, there are the questions of phase transitions and dynamical instability.

Problem 14. Establish the existence of "phase transitions" (cf. § V.4). Explicitly, prove that, for a fixed even P, the function

$$m(\mu, \lambda) \equiv \langle\phi(0)\rangle_{P(X)+\mu X^2-\lambda X}$$

is discontinuous in λ at $\lambda = 0$ provided μ is less than some critical value μ_c. Here $\langle\cdot\rangle_{Q(X)}$ denotes the expectation value for the $Q(\phi)_2$ theory in some infinite volume theory (e.g., the limit of Dirichlet B.C.).

In the case of $P(\phi) = \phi^4$, we can formulate the following conjecture, in analogy with results for the Ising ferromagnet [25], [57] and on the basis of the "conventional wisdom" [117].

This content downloaded from 100.33.74.107 on Sat, 28 Feb 2026 03:57:10 UTC
All use subject to https://about.jstor.org/terms

Problem 15. Let $P(\phi) = \phi^4$. In the notation of Problem 14, prove that for $\lambda = 0$ and $\mu < \mu_c$, there are two pure equilibrium states (in the sense of Problem 8), which we denote by $\langle\cdot\rangle_\pm$, and otherwise ($\lambda \neq 0$ or $\mu > \mu_c$) there is a unique equilibrium state. If $\mu < \mu_c$,

$$\langle\phi(0)\rangle_\pm = \lim_{\lambda\to 0\pm} \langle\phi(0)\rangle_{X^4+\mu X^2-\lambda X} .$$

Moreover, in the case $\mu < \mu_c$ and $\lambda = 0$, the relativistic theory determined by an infinite volume limit (e.g., of free or Dirichlet states) does not have a mass gap, whereas in the pure theories determined by each of $\langle\cdot\rangle_\pm$ there is a positive mass gap above a nondegenerate ground state energy.

Note added (Spring, 1974). There has been considerable progress on some of the above problems. Dobrushin and Minlos [119] have announced a series of results related to Problems 3, 6, 14 but details will have to wait until their full paper appears. In addition:

Problems 1, 2. The $p = 1$, small coupling constant problems have been solved by Newman [70].

Problem 3. A presentation of the small coupling results using Kirkwood-Salzburg equations appears in the Erice lectures of Glimm, Jaffe, and Spencer [122]; see also [121].

Problem 4. The analogous result for anharmonic oscillators has been proved by Eckmann [120] and J. Rosen [126].

Problem 5. There are several partial results: For λ large, Spencer has proved a positive mass gap. For the case $\deg P = 4$, Simon [104] proved uniqueness of the vacuum and the present authors have proved the existence of a positive mass gap [124].

Problem 7 has been solved by the present authors [125]; see also [123].

Problem 10. For $A = \phi(x_1)$, $B = \phi(x_2)$, $C = \phi(x_3)$, and $P(X) = aX^4+bX^2-\mu X$ ($\mu > 0$), Simon and Griffiths [105] have proved an inequality of GHS type. Newman (unpublished) has noted that for $P(X) = aX^6 - \mu X$, a similar inequality must fail for some small a and μ (see [127]).

Problem 11 has been solved by the present authors [125].

Problem 12 for the Schwinger functions has been solved by Dimock [10].

Problem 13 has been partially solved by Eckmann, Magnen, and Seneor [128].

Acknowledgments: As will be obvious to even the casual reader, we

This content downloaded from 100.33.74.107 on Sat, 28 Feb 2026 03:57:10 UTC
All use subject to https://about.jstor.org/terms

are greatly indebted to Edward Nelson both for providing the mathematical framework of this paper and for making a number of valuable suggestions. We have profited from many discussions of this material with Arthur Wightman who has long advocated to us the unifying ideas of quantum field theory and statistical mechanics. In addition, we wish to acknowledge useful conversations with the following people: S. Albeverio, R. Baumel, O. Lanford, J. Lascoux, E. Lieb, D. Robinson, F. Spitzer, E. Stein, and K. Symanzik.

II. Markov fields

In this section we develop the $P(\phi)_2$ Euclidean Markov field theory following Nelson [66], [68] and we discuss its relation to the $P(\phi)_2$ relativistic Hamiltonian theory (see, e.g., [32]). The main point is that the Fock space $\mathcal{F}$ for the relativistic Bose field in s space dimensions can be naturally imbedded as a constant "time" subspace in the Fock space $\mathfrak{N}$ for the Euclidean Bose field in $s + 1$ dimensions. The standard Q-space equivalence $\mathfrak{N} \approx L^2(Q, d\mu_0)$ then provides us with the probability space Q where the probabilistic concepts such as the Markov property can be formulated. For the relations among the various theories for $P(\phi)_2$, the reader should consult Fig. I.1.

In § II.1 we review Nelson's construction of the free Markov field [68] on $\mathfrak{N} \approx L^2(Q, d\mu_0)$ and we describe the imbedding of the free Hamiltonian theory. In § II.3 we directly construct the spatially cutoff $P(\phi)_2$ Euclidean Markov model on the basis of Nelson's theory of multiplicative linear functionals (§ II.2). (Strictly speaking it is incorrect to call the cutoff theories "relativistic" and "Euclidean" since the cutoff destroys the invariance.) As indicated in Fig. I.1, by controlling the infinite volume limit [35], [69] one can obtain a $P(\phi)_2$ Euclidean Markov field theory without cutoffs, and thus a model for the Wightman axioms for relativistic fields by means of Nelson's Reconstruction Theorem [67]; see Theorem II.8 below.* This route completely bypasses the familiar constructs of the Hamiltonian theory [32] (Guenin-Segal construction, Cannon-Jaffe generator, higher order estimates, etc.).

Nevertheless, the connection between the two cutoff theories (Hamiltonian and Markov) has its own interest. Even if one were interested solely in the Markov theories, the cutoff Hamiltonian theory would enter as a useful tool in the Markov theory. In § II.4 we shall see that the cutoff

* In practice, the Markov property has not been verified for any $P(\varphi)_2$ models; for the others, alternate procedures [35], [74] are needed.

This content downloaded from 100.33.74.107 on Sat, 28 Feb 2026 03:57:10 UTC
All use subject to https://about.jstor.org/terms

Hamiltonian theory plays the role of a "transfer matrix" for the Markov theory, allowing the removal of the spatial cutoff in one coordinate. On the other hand the Markov theory can be interpreted as a (Euclidean invariant) path integral for the Hamiltonian theory whose usefulness is apparent [41], [42], [43] even without the Nelson Reconstruction Theorem. We feel that the Hamiltonian and Markov cutoff theories should be viewed as two facets of one single theory. For this reason we discuss their connection via the Feynman-Kac-Nelson formula in both directions: In § II.3 we "derive" the cutoff Hamiltonian $P(\phi)_{1+1}$ theory from the Markov theory, whereas in § II.4 we start from the Hamiltonian theory and use the Trotter product formula to arrive at the Markov theory.

The cutoff theories with which we are concerned in §§ II.3 and II.4 have "free boundary conditions" at the boundary of the cutoff region. In §§ II.5 and II.6 we introduce various methods of prescribing Dirichlet, "half-Dirichlet", and periodic boundary conditions, and we discuss some properties of the theories with these B. C.

After the preparation of this section we received a preprint of Osterwalder and Schrader [74] which elucidates the connection between relativistic and Euclidean field theories. Osterwalder and Schrader present a set of axioms for Euclidean Green's functions (= Schwinger functions) which are necessary and sufficient for the Schwinger functions to have analytic continuations whose boundary values define the Wightman distributions of the relativistic theory. Their axioms differ from Nelson's axioms for a Euclidean Markov field theory (which we discuss in § II.2) in the following way: The Nelson-Symanzik (N-S) positivity condition (the condition on Schwinger functions that gives a positive probability measure and the Euclidean field structure) is replaced by a different positivity condition (see also Nakano [61]). Thus Euclidean fields and a "Euclidean spectral condition" (the Markov property in Nelson's axioms) do not appear in their framework. However, the Osterwalder-Schrader (O-S) positivity condition leads to the spectral condition on the relativistic fields via a simple and beautiful argument. It is easy to see that the N-S positivity condition, the Markov property, and the Nelson reflection axiom imply O-S positivity. Presumably there is a distinguished class of theories which possess N-S positivity and with that the probabilistic and statistical mechanics structures we study in this paper. This class probably includes all scalar Bose Lagrangian field theories.

II.1. *The Free Markov Field.* Our construction of the free Markov

This content downloaded from 100.33.74.107 on Sat, 28 Feb 2026 03:57:10 UTC
All use subject to https://about.jstor.org/terms

field in this subsection uses the abstract theory of Fock spaces [7] and the Γ notation of Segal [90]. For a more complete discussion of this procedure of "second quantization" see [106]. Thus given a complex Hilbert space $\mathcal{H}$ (the "one-particle space"), one defines the Bose Fock space $\mathcal{F} = \Gamma(\mathcal{H})$ over $\mathcal{H}$ as follows: Let $\mathcal{F}_n = S(\mathcal{H}^{\otimes n})$, the n-fold symmetric tensor product of $\mathcal{H}$, and let $\Gamma(\mathcal{H}) = \sum_{n=0}^{\infty} \oplus \mathcal{F}_n$, the symmetric tensor algebra over $\mathcal{H}$. Here $\mathcal{F}_0 = \mathbf{C}$ and the "vacuum" vector $\Omega_0 = (1, 0, 0, \cdots)$. For any operator A on $\mathcal{H}$, the operators $\Gamma(A)$ and $d\Gamma(A)$ are defined by $\Gamma(A) \restriction \mathcal{F}_n = A \otimes \cdots \otimes A$ and $d\Gamma(A) \restriction \mathcal{F}_n = A \otimes I \otimes \cdots \otimes I + I \otimes A \otimes \cdots \otimes I + \cdots + I \otimes \cdots \otimes A$. More generally, if $A: \mathcal{H}_1 \to \mathcal{H}_2$ one can define $\Gamma(A): \Gamma(\mathcal{H}_1) \to \Gamma(\mathcal{H}_2)$ in a similar way.

To form the Q-space associated with $\mathcal{H}$, one requires a distinguished complex conjugation C acting in $\mathcal{H}$. This picks out a distinguished *real* subspace $\mathcal{H}_r = \{f \in \mathcal{H} \mid Cf = f\}$ of $\mathcal{H}$ and an abelian algebra of unbounded field operators $\{\phi(f) \mid f \in \mathcal{H}_r\}$ on $\Gamma(\mathcal{H})$. The fields $\phi(f)$ are defined in the standard way as follows: For $f \in \mathcal{H}_r$ the creation operator $A^*(f): \mathcal{F}_n \to \mathcal{F}_{n+1}$ is given by

$$A^*(f)\psi_n = (n+1)^{1/2} f \otimes_s \psi_n \tag{II.1}$$

where $\psi_n \in \mathcal{F}_n$. The destruction operator $A(f)$ is the adjoint of $A^*(f)$ and the field is defined by

$$\phi(f) = \big(A^*(f) + A(f)\big) . \tag{II.2}$$

Let $\mathfrak{M}$ be the von Neumann algebra generated by $\{e^{i\phi(f)} \mid f \in \mathcal{H}_r\}$. The basic Q-space result is that $\mathcal{F} = \Gamma(\mathcal{H})$ is unitarily equivalent to $L^2(Q, d\mu)$ where

(i) μ is a probability measure;

(ii) Ω_0 is associated to the function 1 in $L^2(Q, d\mu)$;

(iii) $\mathfrak{M}$ goes into $L^\infty(Q, d\mu)$ with its natural action on $L^2(Q, d\mu)$.

Q-space may be realized in several different ways:

(1) as the underlying probability space of the "Gaussian stochastic process indexed by $\mathcal{H}_r$" [24];

(2) as the underlying probability space of a Gaussian process over the dual of some distinguished subspace of $\mathcal{H}$ such as $\mathcal{S}(\mathbf{R}^n)$ in case $\mathcal{H}$ is a Sobolev space on $\mathbf{R}^n$ [24], [34];

(3) as the spectrum of the von Neumann algebra $\mathfrak{M}$ with the measure associated to the functional $\mu\big(F(\phi(f_1), \cdots, \phi(f_n))\big) = \big(\Omega_0, F(\phi(f_1), \cdots)\Omega_0\big)$ [29], [80], [106];

(4) as the infinite product $Q = \bigotimes_{i=1}^{\infty}(\mathbf{R}, \pi^{-1/2}e^{-x_i^2}dx_i)$ in case $\mathcal{H}$ is separable.

This content downloaded from 100.33.74.107 on Sat, 28 Feb 2026 03:57:10 UTC
All use subject to https://about.jstor.org/terms

If $\{g_i\}$ is a distinguished orthonormal basis in $\mathcal{H}_r$ then $\phi(g_1)^{n_1} \cdots \phi(g_k)^{n_k}\Omega_0$ is represented by the function $x_1^{n_1} \cdots x_k^{n_k}$ [90], [78].

What is critical is not the points of Q-space (which are not the same in all of the above realizations) but rather the measure and the measure algebra of measurable sets modulo sets of measure zero. In fact, (i)–(iii) uniquely determine the measure algebra and the measure μ. Much of the theory can be devoloped by endowing $\mathfrak{M}$ with the two norms, $\|A\|_\infty =$ operator norm of A, and $\|A\|_2 = \|A\Omega_0\|_{\mathcal{F}}$, the norm of the vector $A\Omega_0$ in $\mathcal{F}$. One then obtains L^p-norms by the Calderón-Lions theory of abstract interpolation [78, § IX.4] or by the explicit formula $\|A\|_p = \||A|^{p/2}\|_2^{2/p}$.

To describe the free Euclidean Markov theory and its relation to the free relativistic Hamiltonian theory we first construct suitable one-particle spaces and then second quantize. The final result will be an imbedding of the relativistic Fock space $\mathcal{F}$ as the "time" zero subspace of the larger Euclidean Fock space $\mathfrak{N}$; the fields on $\mathfrak{N}$ may be regarded as having been analytically continued to imaginary time. The basis of the construction is the formula which relates Feynman perturbation theory and "old-fashioned" perturbation theory: For $a > 0$,

$$\int_{-\infty}^{\infty} \frac{e^{ip\sigma}}{p^2 + a^2} dp = \frac{\pi e^{-a|\sigma|}}{a} . \tag{II.3}$$

The one-particle space $F \equiv F_{s,m}$ for a free relativistic Bose field of mass $m > 0$ in s-space dimensions is defined as the (Sobolev) space of all distributions f on $\mathbf{R}^s$ with finite norm

$$\|f\|_F^2 \equiv \frac{1}{2} \int |\hat{f}(k)|^2 (k^2 + m^2)^{-1/2} d^s k . \tag{II.4}$$

Throughout this paper we normalize the Fourier tranform from $L^2(\mathbf{R}^n, d^n x)$ to $L^2(\mathbf{R}^n, d^n x)$ by

$$\hat{f}(k) = (2\pi)^{-n/2} \int e^{-ik\cdot x} f(x) d^n x . \tag{II.5}$$

The one-particle space $N \equiv N_{d,m}$ for the free Euclidean Markov field of mass $m > 0$ in $d = s + 1$ "space" dimensions is the Sobolev space of all distributions g on $\mathbf{R}^d$ with finite norm

$$\|g\|_N^2 \equiv \int |\hat{g}(p)|^2 (p^2 + m^2)^{-1} d^d p . \tag{II.6}$$

The distinguished complex conjugation on F and N is defined pointwise in x-space, i.e., $Cf(x) = \overline{f(x)}$, and the inner products are defined in the obvious way.

This content downloaded from 100.33.74.107 on Sat, 28 Feb 2026 03:57:10 UTC
All use subject to https://about.jstor.org/terms

A comment is in order on our choice of inner product in N, which is given by

$$\langle f, g\rangle_N = \int f(x)S(x-y)g(y)d^dxd^dy$$

if f and g are real. Here

$$S(x) = (2\pi)^{-d}\int e^{ip\cdot x}(p^2+m^2)^{-1}d^dp \tag{II.7}$$

defines the Green's function for $(-\Delta+m^2)$, normalized so that $(-\Delta_x+m^2)\times S(x-y)=\delta(x-y)$. Because the abstract field ϕ over a one-particle space $\mathcal{H}$ satisfies

$$\langle\Omega_0, \phi(f)\phi(g)\Omega_0\rangle_{\Gamma(\mathcal{H})} = \langle f, g\rangle_{\mathcal{H}} ,$$

the free Markov field $\phi(x)$, as constructed below, will satisfy

$$\langle\Omega_0, \phi(x)\phi(y)\Omega_0\rangle = S(x-y) . \tag{II.8}$$

The expression (II.8) is of course what results from continuing the time-ordered vacuum expectation value of a product of two free relativistic fields to imaginary time, and this is what dictates our choice of inner product.

The connection between F and N is provided by the formula (II.3). Thus, if $f\in F$ we define the distribution on $\mathbf{R}^d$ by

$$(j_\sigma f)(x, t) = f(x)\delta(t-\sigma) \tag{II.9}$$

where we have singled out the last coordinate of a point (x, t) in $\mathbf{R}^d$. In momentum space

$$(j_\sigma f)^\wedge(p) = (2\pi)^{-1/2}\hat{f}(p_1, \cdots, p_s)e^{-i\sigma p_d} , \tag{II.10}$$

and we state:

PROPOSITION II.1.

(i) *j_0 is an isometry from $F_{s,m}$ to $N_{s+1,m}$.*

(ii) *The range $F^{(\sigma)}$ of j_σ consists precisely of those elements of N with support in the hyperplane $\{(x_1, \cdots, x_d) \mid x_d=\sigma\}$.*

(iii) *$j_\sigma^* j_\tau = e^{-|\sigma-\tau|\mu}$ where μ is the pseudo-differential operator $\mu = (-\Delta+m^2)^{1/2}$.*

Proof. (i) and (iii) follow immediately from (II.3). As for (ii) we need only show that any element of N with support in the hyperplane $x_d=\sigma$ has the form (II.9). But any distribution supported on the hyperplane has the form $\sum_{r=0}^n f_r(x)\delta^{(r)}(x_d-\sigma)$ and from (II.6) we see that it is necessary that $n=0$ in order that this distribution belong to N. □

This content downloaded from 100.33.74.107 on Sat, 28 Feb 2026 03:57:10 UTC
All use subject to https://about.jstor.org/terms

More generally we can naturally imbed F into the distributions in N with support on any given hyperplane of dimension s. There is a useful way of rewriting (iii) that requires some additional notation:

Definitions. Let $e_\sigma = j_\sigma j_\sigma^*$ be the projection in N_d onto $F^{(\sigma)}$. More generally, if Λ is a closed region in $\mathbf{R}^d$, let e_Λ denote the projection in N onto the family of elements with support in Λ.

Given an element β of the (improper) Euclidean group $E(d)$, we denote the map $g \mapsto g_\beta(\cdot) = g(\beta^{-1}\cdot)$ by u_β. In particular $u(\tau)$ represents translation by τ units in the last coordinate and r_t represents reflection in the hyperplane $x_d = 0$.

Then (ii) and (iii) of Proposition II.1 imply:

PROPOSITION II.2.

(i) *r_t leaves $F^{(0)}$ pointwise invariant.*

(ii)

$$e_0 u(\sigma) e_0 = j_0 e^{-|\sigma|\mu} j_0^* \,. \tag{II.11}$$

Henceforth, we will usually identify $F^{(0)}$ and F by $F \underset{j_0^*}{\overset{j_0}{\rightleftarrows}} F^{(0)}$ although, for emphasis, we will sometimes reinsert factors of j_0 and j_0^*. Thus (II.11) becomes $e_0 u(\sigma) e_0 = e^{-|\sigma|\mu}$; also j_σ and $e_\sigma \mid F^{(0)}$ are identified.

The final property of the one-particle space that we shall need is a precursor of Nelson's critical Markov property:

PROPOSITION II.3.

(i) *If A and B are closed sets in $\mathbf{R}^d$, then*

$$e_A e_B = e_{\partial A \cup (A \cap B)} e_B \,. \tag{II.12}$$

In particular, if A^{int} and B are disjoint, then

$$e_A e_B = e_{\partial A} e_B \,. \tag{II.13}$$

(ii) *Only the part of ∂A "nearest" to B enters in* (II.13) *in the sense that if there is a closed set A_1 such that $\partial A_1 \subset A \subset A_1$ with $A_1 \cap B = \varnothing$, then*

$$e_A e_B = e_{\partial A_1} e_B \,. \tag{II.14}$$

(iii) *Let A, B, and C be closed sets in $\mathbf{R}^d$ such that B "separates" A and C in the sense that there is a closed set B_1 with $A \subset B_1, C \cap B_1 = \varnothing$, and $\partial B_1 \subset B \subset B_1$.*

This content downloaded from 100.33.74.107 on Sat, 28 Feb 2026 03:57:10 UTC
All use subject to https://about.jstor.org/terms

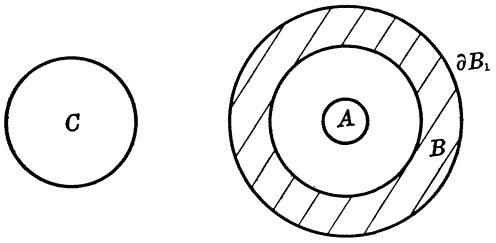

FIGURE II.1

Then

(II.15) $$e_A e_B e_C = e_A e_C.$$

(iv) *Let A, B, and C be closed sets in $\mathbf{R}^d$ with $\partial A \subset B$ and $C \cap (A \backslash B) = \varnothing$.*

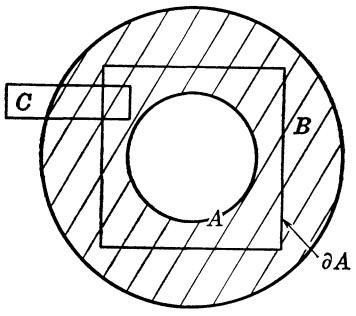

FIGURE II.2

Then

(II.16) $$e_{A \cap B} e_C = e_A e_C \ .$$

Proof.

(i) For any $f \in N$ it is sufficient to show that

(II.17) $$\operatorname{supp} e_A e_B f \subset \partial A \cup (A \cap B)$$

for then $e_{\partial A \cup (A \cap B)} e_A e_B = e_A e_B$ and (II.12) follows since

(II.18) $$e_C e_A = e_A e_C = e_C \quad \text{if} \quad C \subset A \ .$$

Now $\operatorname{supp} e_A e_B f$ is clearly contained in A so that (II.17) is equivalent to proving that $\int \overline{e_A e_B f(x)} g(x) dx = 0$ for all $g \in C_0^\infty$ with $\operatorname{supp} g \subset A \backslash (\partial A \cup (A \cap B)) = (A \backslash B)^{\text{int}}$. But

$$\int \overline{e_A e_B f} g dx = \langle e_A e_B f, (-\Delta + m^2) g \rangle_N = \langle e_B f, e_A (-\Delta + m^2) g \rangle_N$$

$$= \langle e_B f, (-\Delta + m^2) g \rangle_N = \int \overline{e_B f} g dx = 0$$

This content downloaded from 100.33.74.107 on Sat, 28 Feb 2026 03:57:10 UTC
All use subject to https://about.jstor.org/terms

where $e_A(-\Delta + m^2)g = (-\Delta + m^2)g$ since $(-\Delta + m^2)$ is a local operator (i.e., differential rather than pseudo-differential).

(ii) By (II.18) and (II.13), $e_A e_B = e_A e_{A_1} e_B = e_A e_{\partial A_1} e_B = e_{\partial A_1} e_B$.

(iii) By part (ii), $e_B e_C = e_{\partial B_1} e_C$. Hence by (II.13) and (II.18), $e_A e_B e_C = e_A e_{B_1} e_C = e_A e_C$.

(iv) By (II.18) and (II.12), $e_{A \cap B} e_C = e_{A \cap B} e_A e_C = e_{A \cap B} e_{\partial A \cup (A \cap C)} e_C$. But by hypothesis, $\partial A \cup (A \cap C) \subset A \cap B$ so that $e_{A \cap B} e_C = e_{\partial A \cup (A \cap C)} e_C = e_A e_C$, again by (II.12). □

Remark. One important case of (II.15), namely

$$e_r e_s e_t = e_r e_t$$

if $r < s < t$ also follows directly from part (iii) of Proposition II.1.

Notation. We now second quantize and let $\mathcal{F}$ be the Fock space $\Gamma(F)$ and $\mathfrak{N}$ the Fock space $\Gamma(N)$. We introduce the notation $J_\sigma = \Gamma(j_\sigma)$, $E_\sigma = \Gamma(e_\sigma)$, $E_\Lambda = \Gamma(e_\Lambda)$, $U_\beta = \Gamma(u_\beta)$, $U(\tau) = \Gamma(u(\tau))$, $R_t = \Gamma(r_t)$, $\mathcal{F}^{(\sigma)} = \Gamma(F^{(\sigma)})$, and $H_0 = d\Gamma(\mu)$, the free Hamiltonian on $\mathcal{F}$. We denote the vacuum in $\mathcal{F}$ by Ω_0, the vacuum in $\mathfrak{N}$ by ω_0, and the fields (II.2) by $\phi(f)$. We use the symbol $\phi(f)$ both on $\mathcal{F}$ (with $f \in F_s$) and on $\mathfrak{N}$ (with $f \in N_{s+1}$), but when confusion may arise we write $\phi_F(f)$ for the fields on $\mathcal{F}$. The field ϕ on $\mathfrak{N}$ is called the (d-dimension) free Euclidean Markov field of mass m. Then we have:

THEOREM II.4 (Nelson).

(i) *J_σ is an isometric imbedding of $\mathcal{F}$ into $\mathfrak{N}$. The range of J_σ is the subspace $\mathcal{F}^{(\sigma)}$ of $\mathfrak{N}$ concentrated at $x_d = \sigma$.*

(ii)
$$J_\sigma J_\sigma^* = E_\sigma; \quad J_\sigma = U(\sigma) J_0;$$
$$J_\tau^* J_\sigma = e^{-|\tau - \sigma| H_0}; \quad E_0 U(\tau) E_0 = J_0 e^{-|\tau| H_0} J_0^* .$$

(iii) *R_t leaves $\mathcal{F}^{(0)}$ pointwise invariant.*

(iv) *If A and B are closed sets in $\mathbf{R}^d$ with $A^{\text{int}} \cap B = \varnothing$, and if $\psi \in$ Ran E_B, then*

$$E_A \psi = E_{\partial A} \psi . \tag{II.19}$$

(v) *If B separates A and C in the sense of Fig.* II.1, *then*

$$E_A E_B E_C = E_A E_C .$$

(vi) *If A, B, and C are sets as in Fig.* II.2, *then*

$$E_{A \cap B} E_C = E_A E_C .$$

Proof. A direct transcription of the first three propositions of this section. □

This content downloaded from 100.33.74.107 on Sat, 28 Feb 2026 03:57:10 UTC
All use subject to https://about.jstor.org/terms

In terms of the Q-space for $\mathfrak{N}$, $Q \equiv Q_N$, and the associated free Gaussian measure $d\mu_0$ on Q, (II.19) has a natural probabilistic interpretation: By construction of Q-space, the measure algebra $\Sigma_{\mathbf{R}^d}$ (or Σ) on Q is the smallest σ-algebra for which all the $\phi(f)$ are measurable functions. Given a closed set $\Lambda \subset \mathbf{R}^d$ we define $\Sigma_\Lambda \subset \Sigma$ to be the smallest σ-algebra for which the functions $\{\phi(f) \mid \operatorname{supp} f \subset \Lambda\}$ are measurable. Consider a function u, measurable with respect to Σ, which is positive or absolutely integrable. The *conditional expectation* $E[u \mid \Sigma_\Lambda]$ is the unique Σ_Λ-measurable function such that

$$\int E[u \mid \Sigma_\Lambda] v d\mu_0 = \int uv d\mu_0 \tag{II.20}$$

for all positive Σ_Λ-measurable v. The existence of such a function $E[u \mid \Sigma_\Lambda]$ follows from the Radon-Nikodym Theorem [16].

If $v \in L^2(Q, d\mu_0)$ then a simple argument shows that v is Σ_Λ-measurable if and only if $v \in \operatorname{Ran} E_\Lambda$. It follows from (II.20) that

$$E[u \mid \Sigma_\Lambda] \equiv E_\Lambda u \quad \text{if} \quad u \in L^2(Q, d\mu_0) .$$

Since E_Λ is positivity preserving and takes 1 into 1 it extends by continuity to L^1 and is equal to the conditional expectation there. Henceforth we write $E_\Lambda f$ for the conditional expectation.

COROLLARY II.5 (Markov Property). *If A and B are closed sets in $\mathbf{R}^d$ with $A^{\text{int}} \cap B = \emptyset$ and if u is measurable with respect to Σ_B, then*

$$E_A u = E_{\partial A} u .$$

Remark. In one dimension with $A = (-\infty, 0]$ and $B = [0, \infty)$ this property translates into the familiar Markov relation that for questions about the future (u Σ_B-measurable), knowledge of the present ($E_{\partial A} u$) is as good as knowledge of the entire past ($E_A u$).

For later use we note the following elementary properties of the imbedding operator J_σ, considered as a map from $L^p(Q_F)$ to $L^p(Q_N)$, where Q_F is the relativistic and Q_N the Euclidean Q-space:

LEMMA II.6. *Consider the maps J_σ: $L^p(Q_F) \to L^p(Q_N)$ and J_σ^*: $L^p(Q_N) \to L^p(Q_F)$ where $1 \leqq p \leqq \infty$.*

(i) *J_σ and J_σ^* are positivity-preserving, take 1 into 1, and are contractions on each L^p.*

(ii) *J_σ and J_σ^* are strongly continuous in σ on each L^p, $p < \infty$.*

Proof.

(i) Since J_σ is the biquantization $\Gamma(j_\sigma)$ with j_σ a contraction from F to

This content downloaded from 100.33.74.107 on Sat, 28 Feb 2026 03:57:10 UTC
All use subject to https://about.jstor.org/terms

N, these facts may be regarded as a consequence of Theorem 1 of Nelson [68].

(ii) Since $J_\sigma = U(\sigma)J_0$ the continuity of J_σ and J_σ^* follows from that of $U(\sigma)$.

This completes our review of Nelson's construction of the free Markov field. In concluding, we answer the natural question concerning the connection between the free Markov field and the theory of unitary dilations of Foias-Sz.-Nagy [112]. Clearly the group $U(\sigma)$ is a dilation of the semigroup e^{-tH_0} on $\mathcal{F}$. It is however *not* the minimal dilation. Rather, $u(\sigma)$ is the minimal dilation of $e^{-t\mu}$, so that $U(\sigma)$ is the second quantization of the minimal dilation.

II.2. *Nelson's Axioms for Euclidean Markov Fields.* In this section we discuss Nelson's axiom for a Euclidean Markov field in d dimensions [67]. These axioms were essentially verified for the free field in the previous section and, as in the case of the Wightman axioms for relativistic fields, the experience with the free field provides a good deal of insight into how to formulate the general axioms:

Axiom A. There is a probability measure space (Q, Σ, μ) and a representation of the full Euclidean group $E(d)$ by measure-preserving automorphisms T_β of the measure algebra Σ. Given u, v in L^∞, $\beta \to \int u(v \circ T_\beta)d\mu$ is a measurable function on $E(d)$.

Axiom B. The translation subgroup of $E(d)$ acts ergodically, i.e., the only translation invariant measurable functions are constants.

Axiom C. For each $f \in N_{d,1}$ (the Sobolev space defined in (II.6)), there is a random variable ($\equiv$ measurable function) $\phi(f)$ on (Q, Σ). $\phi(f)$ is linear in f and real-valued if f is real-valued. If $f_n \to f$ in $N_{d,1}$, then $\phi(f_n) \to \phi(f)$ in measure.

Axiom D. (Markov Property) For any closed region $\Lambda \subset \mathbf{R}^d$ let $\Sigma_\Lambda \subset \Sigma$ be the smallest σ-algebra with respect to which the random variables $\{\phi(f) \mid \operatorname{supp} f \subset \Lambda\}$ are measurable. Let A, B be closed sets in $\mathbf{R}^d$ such that $A^{\text{int}} \cap B = \varnothing$. If $u \in L^1(Q, d\mu)$ is Σ_B-measurable, then

$$E_A u = E_{\partial A} u \,.$$

Axiom E. $\phi(f) \circ T_\beta = \phi(f \circ \beta)$.

To state the last axiom we require a theorem whose proof we defer:

THEOREM II.7 (Nelson [67]). *Let* $\mathbf{R}^s$ *be the hyperplane* $x_d = 0$ *in* $\mathbf{R}^d$ $(d = s + 1)$, *and let* $U(\tau)$ *be the unitaries on* $L^2(Q, \Sigma, d\mu)$ *induced by*

This content downloaded from 100.33.74.107 on Sat, 28 Feb 2026 03:57:10 UTC
All use subject to https://about.jstor.org/terms

translation by τ in the x_d coordinate. Let $\mathcal{H}$ be the Hilbert space of functions in $L^2(Q, \Sigma, d\mu)$ which are $\Sigma_{\mathbf{R}^s}$-measurable. Let E_0 denote the projection from L^2 to $\mathcal{H}$. Then there is a positive self-adjoint operator H on $\mathcal{H}$ with

$$E_0 U(\tau) E_0 = e^{-|\tau| H} .$$

Axiom F. Let δ_0 be the distribution $\delta(\tau)$ on $\mathbf{R}$. There are fixed k and l so that for each $f \in \mathcal{S}(\mathbf{R}^s)$, $(H+1)^{-k} \,|\, \phi(f \otimes \delta_0) \,|\, (H+1)^{-l}$ is bounded. We write $\phi(f \otimes \delta_0) = \phi_0(f)$.

Remarks 1. A theory satisfying Axioms A–F is called a (ergodic) Euclidean Markov field theory. A theory satisfying Axioms C and D is called a Markov field theory (more precisely, a Markov field over $N_{d,1}$).

2. The expectation of products of fields $\int \phi(f_1) \cdots \phi(f_n) d\mu$, $f_j \in \mathcal{S}(\mathbf{R}^d)$, can be proved to exist if the f_j have disjoint support. It can be shown [65], [108] that there are functions $S(x_1, \cdots, x_n)$ real analytic on $\mathbf{R}^{nd} \backslash \{(x_1, \cdots, x_n) \mid x_i = x_j \text{ some } i \neq j\}$ such that

$$\int \phi(f_1) \cdots \phi(f_n) d\mu = \int S(x_1, \cdots, x_n) f(x_1) \cdots f(x_n) dx_1 \cdots dx_n .$$

These are called the *Schwinger functions.*

3. A rather different set of axioms in terms of the Euclidean Schwinger functions has recently been proposed by Osterwalder and Schrader [74] (see the note at the beginning of § II).

4. It is interesting to compare the Nelson axioms with the Wightman axioms [108]. Axiom O of Wightman is the analogue of Axioms A, B, D; we discuss the analogy between the spectral condition and the Markov property below. Axiom I of Wightman corresponds to Axioms C and F, and Axiom II to Axiom E. Axiom III (Local Commutativity) is built into the general commutative framework of Markov theories.

5. The Markov property is closely connected with the spectral condition for Wightman theories. First, the Markov property is critical for the proof of Theorem II.7 which entails positivity of the energy. On a deeper level, it is the spectral condition which allows one to continue the Wightman functions from the Minkowski to the Euclidean region and it is the Markov property which allows one to continue in the other direction. There is one important distinction between the Markov and spectral properties. The spectral condition is a linear relation on individual Wightman functions, while the Markov property is a non-linear condition on the whole family of Schwinger functions, not readily expressed in terms of the Schwinger function.

This content downloaded from 100.33.74.107 on Sat, 28 Feb 2026 03:57:10 UTC
All use subject to https://about.jstor.org/terms

6. As in the Wightman theory, one usually adds a cyclicity assumption which here takes the form: Σ is the smallest σ-algebra for which each $\phi(f)$ is measurable. This can always be arranged by making Σ smaller, if necessary.

The crucial point about Nelson's axioms is that they allow one to continue analytically to get a Wightman field theory on the Hilbert space $\mathcal{H} = E_0 L^2(Q, d\mu)$:

THEOREM II.8 (Nelson's Reconstruction Theorem [67]). *Given a Euclidean Field Theory obeying Axioms* A–F, *then*

(i) *For any* $f \in \mathcal{S}(\mathbf{R}^d)$

$$\Phi(f) = \int_{-\infty}^{\infty} e^{iHt}\phi_0(f(\cdot, t))e^{-iHt}dt ,$$

defined as a quadratic form on $C^\infty(H) \subset \mathcal{H}$, *is the form of an operator on* $C^\infty(H)$.

(ii) $C^\infty(H)$ *is left invariant by* $\Phi(f)$, *so that, in particular, the vacuum for* H, Ω_0, *is contained in* $D(\Phi(f_1) \cdots \Phi(f_n))$ *for any* $f_1, \cdots, f_n \in \mathcal{S}(\mathbf{R}^d)$.

(iii) *The distributions* $f_1, \cdots, f_n \mapsto (\Omega_0, \Phi(f_1) \cdots \Phi(f_n)\Omega_0)$ *are the Wightman distributions of a theory obeying the Wightman axioms* (0, I, II, III) *of* [108].

(iv) *The analytic continuations of the Wightman functions to the Euclidean region of the forward tube are the Schwinger functions.*

Theorems II.7 and II.8 are proved in [67] (except for (i) and (ii) of Theorem II.8 which depend only on Axiom F and are proved in [66]). However, since we shall use Theorem II.7, let us sketch its proof:

Proof of Theorem II.7. By Axiom A, $U(\sigma)$ is a weakly continuous unitary group and is thus strongly continuous. Let $P_\sigma = E_0 U(\sigma) E_0$. Then P_σ is strongly continuous and $P_\sigma^* = P_{-\sigma}$ since $U(\sigma)$ is unitary. Clearly $\| P_\sigma \| = 1$. Next we claim that U_t, the unitary associated with reflection in the hyperplane $\mathbf{R}^s$, leaves $\mathcal{H}$ pointwise invariant. For by Proposition II.2(i), $R_t f = f$ for all $f \in N_d$ with $\operatorname{supp} f \in \mathbf{R}^s$. Thus $U_t \phi(f) U_t^{-1} = \phi(f)$ for any such f. Since these $\phi(f)$ generate the algebra $\Sigma_{\mathbf{R}^s}$, $U_t \chi_A U_t^{-1} = \chi_A$ for any $A \in \Sigma_{\mathbf{R}^s}$. Thus $U_t \eta 1 = \eta 1$ for any $\eta 1 \in \mathcal{H}$, or, equivalently, $U_t E_0 = E_0$. Since $U_t^{-1} U(\sigma) U_t = U(-\sigma)$ we see that

$$P_\sigma^* = E_0 U(-\sigma) E_0 = E_0 U_t^{-1} U(0) U_t E_0 = P_\sigma$$

so that P_σ is self-adjoint. Finally, let $\sigma, \tau > 0$. Then for any $u, v \in \mathcal{H}$, $(U(-\sigma)u, E_0 U(\tau) v) = (U(-\sigma)u, U(\tau)v)$ by the Markov property (Theorem

This content downloaded from 100.33.74.107 on Sat, 28 Feb 2026 03:57:10 UTC
All use subject to https://about.jstor.org/terms

II.4(v)). Thus $P_\sigma P_\tau = P_{\sigma+\tau}$. It follows that $P_\sigma = e^{-|\sigma|H}$ for some self-adjoint operator $H \geqq 0$. □

One approach to building up Markov field theories is to perturb a given Markov field, like the free Markov field, in a suitable way so that the Markov property is preserved. Following Nelson [66] we define:

Definition. Let (ϕ, Q, Σ, μ) be a Markov field theory. A *multiplicative functional* on (Q, Σ, μ) is a random variable G such that for every finite open cover $\{A_j\}_{j=1}^n$ of $\mathbf{R}^d$ there exist $G_1, \cdots, G_n$ satisfying:

(i) G_j is Σ_{A_j}-measurable;

(ii) $G_j > 0$ a.e. and $G_j \in L^1(Q, d\mu)$ for all j;

(iii) $G = \prod_j G_j$.

If $\int G d\mu = 1$ we say that G is normalized.

THEOREM II.9 (announced in Nelson [66]). *If G is a normalized multiplicative functional, define the measure $d\nu = G d\mu$. Then (ϕ, Q, Σ, ν) is a Markov field.*

In the case where the original theory is the free theory of § II.1 ($\mu = \mu_0$), a proof of Theorem II.9 can be based on Theorem II.4(vi). Formally, a multiplicative functional for the free field should be of the form

$$G = \exp\left(-\int H_I(x) d^d x\right)$$

where $H_I(x)$ is some local density, for instance, a Wick polynomial in the free field. However, it is not possible to take $H_I(x)$ translation invariant because, by ergodicity, the only translation invariant multiplicative functional is a constant. (This is the Euclidean version of Haag's Theorem.) At this point we leave the general theory and turn to the construction of the cutoff $P(\phi)_2$ Markov theory where $H_I(x)$ is a spatially cutoff polynomial in the field.

II.3. *The Spatially Cutoff $P(\phi)_2$ Markov Theory.* The natural choice for the density $H_I(x)$ is a polynomial in the field. Throughout this paper, the polynomials $P(X)$ that we consider will be *semibounded*, even if we neglect to say so. Moreover, to avoid ultraviolet renormalization questions, we shall restrict ourselves to $d = s + 1 = 2$ dimensions when dealing with the interacting theory.

Definition. Let $a^*(k)$ be the Euclidean creation operator-valued distribution defined by

This content downloaded from 100.33.74.107 on Sat, 28 Feb 2026 03:57:10 UTC
All use subject to https://about.jstor.org/terms

$$\int a^*(k)f(k)d^2k = A^*(\mu\check{f}) \tag{II.21}$$

where A^* is defined in (II.1), $\mu = (-\Delta + m^2)^{1/2}$, and $\check{f}$ is the inverse Fourier transform of f.

In terms of $a^*(k)$ and its adjoint distribution $a(k)$ the Euclidean field (II.2) is given by the expression

$$\phi(x) = (2\pi)^{-1}\int e^{-ik\cdot x}[a^*(k) + a(-k)]\mu(k)^{-1}d^2k ,$$

where $\mu(k) = (k^2 + m^2)^{1/2}$. We find it convenient to use the operators $a(f)$ and $a^*(g)$ which for real $\check{f}(x)$ and $\check{g}(x)$ satisfy the commutation relations

$$[a(f), a^*(g)] = \int \check{f}(x)\check{g}(x)d^2x ,$$

compared to the A^*'s which satisfy

$$[A(f), A^*(g)] = \langle f, g\rangle_N .$$

Wick powers are defined by

$$:\phi^n(x): = (2\pi)^{-n}\int e^{-ix\cdot(k_1+\cdots+k_n)}\sum_{j=0}^{n}\binom{n}{j}a^*(k_1)\cdots a^*(k_j)$$
$$\cdot a(-k_{j+1})\cdots a(-k_n)\prod_i \mu(k_i)^{-1}dk_i ,$$

as a quadratic form on finite particle vectors with smooth components.

As a direct analogue of the results for Wick polynomials over the one-dimensional Fock space $\mathcal{F} = \Gamma(F_1)$, we have the following theorem for the Q-space functions

$$U^{(n)}(g) = \left(\int g(x):\phi^n(x): d^2x\right)w_0$$

and $e^{-U(g)}$, where $U(g) = \sum_{r=0}^{2m} a_r U^{(r)}(g)$ is the Q-space function generated by the polynomial $P(X) = \sum_{r=0}^{2m} a_r X^r$, $a_{2m} > 0$:

THEOREM II.10. *Assume that for some $\varepsilon > 0$, g belongs to the Sobolev space $\mathcal{H}_{-1+\varepsilon}(\mathbf{R}^2)$; i.e.,*

$$\int |\hat{g}(k)|^2(k^2 + 1)^{-1+\varepsilon}d^2k < \infty . \tag{II.22}$$

(i) *$U^{(n)}(g)$ is a function in $\bigcap_{p<\infty} L^p(Q, d\mu_0)$, and if $p \geqq 2$,*

$$\| U^{(n)}(g)\|_p \leqq (p-1)^{n/2}\| U^{(n)}(g)\|_2 . \tag{II.23}$$

(ii) *If g has support in some set $A \subset \mathbf{R}^2$ which is either open or closed, then $U^{(n)}(g)$ is Σ_A-measurable.*

(iii) *If in addition $g \in L^1(\mathbf{R}^2)$ and $g \geqq 0$, then*

This content downloaded from 100.33.74.107 on Sat, 28 Feb 2026 03:57:10 UTC
All use subject to https://about.jstor.org/terms

$$e^{-U(g)} \in \bigcap_{p<\infty} L^p(Q, d\mu_0) .$$

(iv) *For fixed m and g as in* (iii), $F(a_0, \cdots, a_{2m}) = e^{-U(g)}$ *is analytic on* $\mathbf{C}_+^{2m+1} = \{z \in \mathbf{C}^{2m+1} \mid \operatorname{Re} z_{2m} > 0\}$ *in each* L^p *with* $p < \infty$.

Remarks 1. We shall generally identify $U(g)$ with $\int g(x){:}P(\phi(x)){:}\, d^2x$; i.e., we omit the ω_0.

2. Since this theorem is closely related to the results for Wick polynomials on the one-dimensional Fock space $\mathcal{F}$ (see, for instance § 2 of [32] or § 3 of [106]), we shall be content with a sketch of the proof. Roughly speaking, the estimates are the same because the extra dimension is compensated for by the extra power of k in the denominator, i.e., $d^1k/\mu(k) \sim d^2k/\mu(k)^2$.

3. The conditions on g are not optimal. Actually condition (II.22) is just a shade off the exact condition which involves logarithms (cf. Lemma A.1 of [43]). Note that (II.22) is satisfied if, for instance, $g \in L^q(\mathbf{R}^2)$ for $1 < q \leqq 2$ [43], or if g has the form $g(x_1, x_2) = f(x_1)\delta(x_2 - \sigma)$ where $f \in \mathcal{H}_{-\lambda}(\mathbf{R}^1)$ with $\lambda < 1/2$.

The regularity condition in (iii), i.e., $g \in \mathcal{H}_{-1+\varepsilon} \cap L^1$, is far from optimal. In § III we shall see that

$$\| e^{-U(g)} \|_p \leqq \exp\left(p^{-1} \int \alpha_\infty(pg(x))d^2x\right)$$

where $\alpha_\infty(\lambda)$ is the energy per unit volume for the $\lambda P(\phi)_2$ Hamiltonian theory [43]. Thus the bounds $\alpha_\infty(\lambda) \leqq c_1\lambda^2$ and $\alpha_\infty(\lambda) \leqq c_2\lambda^{1+\varepsilon}$ of [43] imply that (iii) holds under the weaker hypotheses $g \in L^2 + L^{1+\varepsilon}$ and $g \geqq 0$ (which are still not optimal).

Proof. (i), (ii). In the standard way we introduce an ultraviolet cutoff field $\phi_h(x) = \int h(x - y)\phi(y)dy$ with $h \in C_0^\infty(\mathbf{R}^2)$. Then Wick powers can be expressed in terms of ordinary powers and $U_h^{(n)}(g) = \int g(x){:}\phi_h^n(x){:}\, d^2x\omega_0$ is seen to be a function that is Σ_{A_h}-measurable; here $A_h = \{x + y \mid x \in A, y \in \operatorname{supp} h\}$. By the arithmetic-geometric mean inequality and a number estimate, one can show that (II.22) implies that, as $h \to \delta$, $U_h^{(n)}(g)$ converges in L^2 to $U^{(n)}(g)$ and that $U^{(n)}(g) \in L^2$. As in [106], the hypercontractivity of e^{-Nt}, and the fact that $U^{(n)}(g)$ represents an n-particle vector in $\mathfrak{N}$ imply that $U^{(n)}(g) \in \bigcap_{p<\infty} L^p$. The actual L^p bound (II.23) uses Nelson's "best hypercontractive bound" [68] (see Theorem III.1 below). By shrinking the support of g a little (i.e., by approximating g with g_n where $\operatorname{supp} g_n \subset (\operatorname{supp} g)^{\text{int}}$) we can deduce that $U^{(n)}(g)$ is Σ_A-measurable.

This content downloaded from 100.33.74.107 on Sat, 28 Feb 2026 03:57:10 UTC
All use subject to https://about.jstor.org/terms

(iii) That $e^{-U(g)} \in L^p$ is just Nelson's classic result [63], [32] that, while $U(g)$ may be unbounded below, it is large negative on sets of very small measure. The basic ingredients in the proof are the estimate ($p \geqq 2$)

$$\begin{aligned} \| U^{(n)}(g) - U_h^{(n)}(g) \|_p &\leqq (p-1)^{n/2} \| U^{(n)}(g) - U_h^{(n)}(g) \|_2 \\ &= O\big((p-1)^{n/2} |\operatorname{supp} h|^{(1/2)-\varepsilon}\big) , \end{aligned}$$

and the fact that the infinite Wick constant $\int d^2k/(k^2+m^2)$ is only logarithmically divergent.

(iv) By (i) and (iii), $U(g) \in \bigcap_{p<\infty} L^p$ and for each $p < \infty$, $F(a)$ is uniformly L^p-bounded for a in a compact subset of $\mathbf{C}_+^{2m+1}$. The stated analyticity thus follows from Hölder's inequality and the identity

$$e^{-zf} - e^{-wf} = \int_z^w f e^{-yf} dy . \qquad \square$$

It now follows easily that:

COROLLARY II.11. *If P is a semibounded polynomial and if $g \in L^1 \cap L^{1+\varepsilon}(\mathbf{R}^2)$, $g \geqq 0$, then* $\exp\left(-\int g(x){:}P(\phi(x)){:}\, d^2x\right)$ *is a multiplicative functional over the free Markov field.*

COROLLARY II.12. *Let P be a semibounded polynomial and let g_n be a sequence of non-negative functions in $L^1 \cap L^{1+\varepsilon}(\mathbf{R}^2)$ such that* $\sup \| g_n \|_1 < \infty$ *and $g_n \to g$ in $L^{1+\varepsilon}(\mathbf{R}^2)$. Then in each $L^p(Q, d\mu_0)$ ($p < \infty$),*

$$\exp\left(-\int g_n(x){:}P(\phi(x)){:}\, d^2x\right) \longrightarrow \exp\left(-\int g(x){:}P(\phi(x)){:}\, d^2x\right) .$$

To prove Corollary II.12 we have used

$$|e^{-x} - e^{-y}| = \left| \int_x^y e^{-s} ds \right| \leqq |x-y| \cdot |e^{-x} + e^{-y}| . \tag{II.24}$$

We have thus justified:

Definitions. Let P be a semibounded polynomial and g a non-negative function in $L^1 \cap L^{1+\varepsilon}(\mathbf{R}^2)$. The *cutoff $P(\phi)_2$ Markov field theory with cutoff g* is the theory whose field is the free Markov field but with measure

$$d\nu_g = \frac{e^{-U(g)} d\mu_0}{\int e^{-U(g)} d\mu_0} \tag{II.25}$$

where $U(g) = \int g(x){:}P(\phi(x)){:}\, d^2x \omega_0$.

The distributions

$$S_g(x_1, \cdots, x_n) = \int \phi(x_1) \cdots \phi(x_n) d\nu_g$$

This content downloaded from 100.33.74.107 on Sat, 28 Feb 2026 03:57:10 UTC
All use subject to https://about.jstor.org/terms

are called the *Schwinger functions* for the cutoff $P(\phi)_2$ Markov theory.

Of course $d\nu_g$ is not Euclidean invariant but one can attempt to construct Euclidean invariant theories by taking $g \to 1$ and proving that $d\nu_g$ converges to a new measure. In fact, one shows (see § V.4) that the moments of these measures (i.e., the Schwinger functions) converge as $g \to 1$.

We conclude this subsection by giving purely Markov proofs of the basic results for the spatially cutoff $P(\phi)_2$ Hamiltonian; namely, $H(g)$ is semibounded and essentially self-adjoint on $D(H_0) \cap D(H_I(g))$, and $E(g) = \inf \sigma(H(g))$ is a simple eigenvalue.

The Markov proof of essential self-adjointness retains the general features of the original Glimm-Jaffe-Rosen proofs [29], [80] and of the hypercontractive proofs [94], [106] but is more streamlined for the following reasons. As we shall describe in the next section, Euclidean Q-space, Q_N, can be viewed as a path space over the relativistic Q-space, Q_F. Thus the Markov proof is like Rosen's proof except that there is no need to put in box and ultraviolet cutoffs in order to reduce to a system with a finite number of degrees of freedom for which ordinary path integrals can be constructed. Moreover, the argument to obtain the Hamiltonian in the proof of Theorem II.7 eliminates the Q-space cutoffs and the Trotter product arguments of the hypercontractive proof.

First we make more explicit the identification between the fields ϕ_F on $\mathcal{F}$ and the "constant time" fields on $\mathfrak{N}$. Recall that we denote by $\mathfrak{M}$ the von Neumann algebra over $\mathfrak{N}$ generated by $\{e^{i\phi(f)} \mid f \in N,\ f \text{ real}\}$. We write $\mathfrak{M}_F$ for the von Neumann algebra over $\mathcal{F}$ generated by $\{e^{i\phi_F(f)} \mid f \in F,\ f \text{ real}\}$, and $\mathfrak{M}^{(\sigma)}$ for the von Neumann algebra over $\mathfrak{N}$ generated by $\{e^{i\phi(j_\sigma f)} \mid f \in F,\ f \text{ real}\}$. We emphasize that $V \in \mathfrak{M}_F$ means that V is bounded. The map $\phi_F(f) \mapsto \phi(j_\sigma f)$ extends to a *-isomorphism $\alpha_\sigma\colon \mathfrak{M}_F \to \mathfrak{M}^{(\sigma)}$.

LEMMA II.13. *Let $f \in F$ be real and let $V \in \mathfrak{M}_F$.*

(i)

$$\phi_F(f) = J_\sigma^* \phi(j_\sigma f) J_\sigma \tag{II.26a}$$

and

$$V = J_\sigma^* \alpha_\sigma(V) J_\sigma\,. \tag{II.26b}$$

(ii) *Let $\Lambda = \mathbf{R} \times [a, b]$ be a "time-slice" in $\mathbf{R}^2$. If $\sigma \in [a, b]$,*

$$\alpha_\sigma(V) E_\Lambda = E_\Lambda \alpha_\sigma(V) E_\Lambda\,; \tag{II.27}$$

i.e., $\alpha_\sigma(V)\operatorname{Ran} E_\Lambda \subset \operatorname{Ran} E_\Lambda$.

(iii) $E_\sigma \alpha_\sigma(V) = \alpha_\sigma(V) E_\sigma = E_\sigma \alpha_\sigma(V) E_\sigma = J_\sigma V J_\sigma^*$.

This content downloaded from 100.33.74.107 on Sat, 28 Feb 2026 03:57:10 UTC
All use subject to https://about.jstor.org/terms

Proof.

(i) It is clear from the definition (II.1) that for any single-particle operator j, $\Gamma(j)A^*(f) = A^*(jf)\Gamma(j)$. In particular,

$$J_\sigma A_F^*(f) = A^*(j_\sigma f)J_\sigma \,. \tag{II.28}$$

Recalling that $J_\sigma^* J_\sigma = I$ ($J_\sigma J_\sigma^* = E_\sigma$), we obtain, upon operating on (II.28) with J_σ^* and taking adjoints, $A_F^\#(f) = J_\sigma^* A^\#(j_\sigma f)J_\sigma$ where $A^\# = A$ or A^*. From the definition (II.2) we deduce the desired relation for the fields and, by extension, the relation (II.26b). Since $A^\#$, ϕ are unbounded the above argument requires some care with domains. All operator formulae hold when applied to finite particle vectors. Since these are analytic vectors for the fields, the relation (II.26a) extends to exponentials $e^{i\phi}$ and thus to $\mathfrak{M}$.

(ii) Ran E_Λ is generated by vectors in $\mathfrak{N}$ of the form $g_1 \otimes_s \cdots \otimes_s g_n$ where $g_i \in N$ with $\operatorname{supp} g_i \subset \Lambda$. If $\operatorname{supp} g \subset \Lambda$, it is obvious that both $A(g)$ and $A^*(g)$ take the span of such vectors into themselves, and this observation yields (II.27).

(iii) This result follows from applying J_σ and J_σ^* on the left and right in (II.26b) and using (II.27). □

Remarks 1. We usually write $\phi(f, \sigma)$ for $\phi(j_\sigma f) = \phi(f \otimes \delta_\sigma)$.

2. The relation $\phi_F(f) = J_\sigma^* \phi(f, \sigma) J_\sigma$ clearly extends to Wick polynomials as well, i.e.,

$$\int g(x){:}P\big(\phi_F(x)\big){:}\, dx = J_\sigma^* \int g(x){:}P\big(\phi(x, \sigma)\big){:}\, dx J_\sigma \,. \tag{II.29}$$

Here is a sketch of the Markov proofs of the basic results cited above for the Hamiltonian

$$H(g) = H_0 + H_I(g) = H_0 + \int g(x){:}P\big(\phi_F(x)\big){:}\, dx$$

on $\mathcal{F}$, where $g \in L^1 \cap L^{1+\varepsilon}(\mathbf{R})$:

Step 1. For any finite interval $I \subset \mathbf{R}$, let

$$F_I = \exp\left(-\int_I ds \int dx\, g(x){:}P\big(\phi(x, s)\big){:}\right) .$$

For $t > 0$ define the operator U_t on $\mathcal{F}$ by

$$U_t = J_t^* F_{(0,t)} J_0 \,. \tag{II.30}$$

By Lemma II.6(i), Theorem II.10(iii), and Hölder's inequality, we see that U_t is a bounded map from $L^p(Q_F)$ to $L^2(Q_F)$ for any $p > 2$. In fact, by

This content downloaded from 100.33.74.107 on Sat, 28 Feb 2026 03:57:10 UTC
All use subject to https://about.jstor.org/terms

Corollary III.8, U_t is bounded from L^2 to L^2 and even from L^2 to L^{p_t} where $p_t > 2$ depends on $t > 0$. At any rate $\{U_t\}$ is a family of bounded operators on $\mathcal{F}$.

Step 2. By translation invariance of the free Markov field, $U_t = J^*_{t+s}F_{(s,t+s)}J_s$; therefore

$$U_tU_s = J^*_{t+s}F_{(s,t+s)}E_sF_{(0,s)}J_0 = U_{t+s}$$

because the projection E_s can be dropped by the Markov property (Theorem II.4(v)). By reflection invariance (Theorem II.4(iii))

$$U_t = J^*_{-t}F_{(-t,0)}J_0 = J_0^*F_{(0,t)}J_t = U_t^*$$

by translation invariance. Finally, by Corollary II.12, Lemma II.6, and Hölder's inequality, we see that U_t is L^2 strongly continuous in t on vectors in L^p, $p > 2$, and therefore, by continuity, on all of L^2. Summarizing, we have established that U_t is a strongly continuous, self-adjoint semigroup. Consequently, there is a semibounded self-adjoint operator H on $\mathcal{F}$ such that $U_t = e^{-tH}$.

Step 3. To complete the proof of essential self-adjointness of $H(g)$, we demonstrate that there is a core $\mathcal{D}$ for H, contained in $D(H_0) \cap D(H_I(g))$, on which $H = H(g) \equiv H_0 + H_I(g)$. First, note that for any function $a(t) \in L^\infty(\mathbf{R}; L^\infty(Q))$,

$$e^{-\int_0^t a(s)ds} - 1 = -\int_0^t a(s)e^{-\int_0^s a(u)du}ds\ ,$$

as can be checked by differentiating with respect to t or by expanding the exponential. It follows by a limiting argument that

$$F_{(0,t)} - 1 = -\int_0^t \left(\int g(x){:}P(\phi(x, s)){:}dx\right)F_{(0,s)}ds\ ,$$

and thus from (II. 30) that

$$U_t - J_t^*J_0 = -\int_0^t J_t^*\left(\int g(x){:}P(\phi(x, s)){:}dx\right)F_{(0,s)}J_0ds\ .$$

By Theorem II.10(ii) and the Markov property we are entitled to insert projections E_s on either side of $\int g{:}\ P(\phi){:}\ dx$ to conclude, by (II.29), that

$$U_t - J_t^*J_0 = -\int_0^t J_t^*J_sH_I(g)U_sds$$

which, by Theorem II.4(ii), is just Duhamel's formula:

$$e^{-tH} - e^{-tH_0} = -\int_0^t e^{-(t-s)H_0}H_I(g)e^{-sH}ds\ . \tag{II.31}$$

This content downloaded from 100.33.74.107 on Sat, 28 Feb 2026 03:57:10 UTC
All use subject to https://about.jstor.org/terms

A priori, both sides of (II.31) are equal in L^p $(p < 2)$ when applied to a function in L^2, but, again using hypercontractivity, we obtain equality as operators on $\mathcal{F}$.

Now we appeal to an argument of Semenov [95]: Let $\mathcal{D} = e^{-H}[L^\infty(Q_F)]$. It is easy to see ([106, Lemma 2.15]) that $\mathcal{D}$ is a core for H and by Hölder's inequality that $\mathcal{D} \subset \bigcap_{p<\infty} L^p \subset D(H_I(g))$. For $\psi \in \mathcal{D}$, define

$$f(s, t) = e^{-(t-s)H_0} H_I(g) e^{-sH} \psi \ .$$

$f(s, t)$ is strongly continuous on $\{(s, t) \mid 0 \leqq s \leqq t\}$ with $f(0, 0) = H_I(g)\psi$. It follows that as $t \to 0$,

$$\frac{1}{t} \int_0^t e^{-(t-s)H_0} H_I(g) e^{-sH} \psi \longrightarrow H_I(g)\psi \ .$$

But since $\psi \in D(H)$, $t^{-1}(e^{-tH} - 1)\psi \to -H\psi$. Therefore by (II.31),

$$t^{-1}(e^{-tH_0} - 1)\psi \longrightarrow -H\psi + H_I(g)\psi$$

so that $\psi \in D(H_0)$ and $H_0\psi = (H - H_I(g))\psi$. Thus

$$H \restriction \mathcal{D} \subset H(g) \restriction D(H_0) \cap D(H_I(g))$$

and the proof is complete. By following [100] one can further prove that $H(g)$ is essentially self-adjoint on $C^\infty(H_0)$.

Step 4. As we indicated above, the semigroup $e^{-tH(g)}$ is hypercontractive; moreover by simple Markov techniques, Simon [102] has shown that $e^{-tH(g)}$ is ergodic, or, equivalently positivity improving. The hypercontractivity and positivity preserving properties of $e^{-tH(g)}$ imply the existence of an eigenvalue at $E(g) = \inf \sigma(H(g))$ by an argument of Gross [40]. It also follows by an infinite dimensional generalization of the Perron-Frobenius Theorem [30], [40] that E_g is simple. Moreover, the associated eigenvector Ω_g satisfies $(\Omega_0, \Omega_g) \neq 0$.

We have shown at the same time the following:

THEOREM II.14 (Feynman-Kac-Nelson Formula). *Under the above assumptions on P and g, we have any vectors u, v in $\mathcal{F}$ and $t > 0$:*

$$\text{(II.32)} \quad (u, e^{-t(H_0+H_I(g))}v) = \int \overline{(J_t u)} \exp\left(-\int_0^t ds \int dx g(x) {:}P(\phi(x, s)){:}\right) J_0 v d\mu_0 \ .$$

As an immediate corollary of this formula, the fact that J_σ takes Ω_0 into ω_0, and the Euclidean invariance of the free Markov field, we obtain the symmetry [66] which is the starting point of [41], [42], [43]:

THEOREM II.15 (Nelson's Symmetry). *Let $H_l = H_0 + \int_{-l/2}^{l/2} {:}P(\phi(x)){:}\, dx$. Then $(\Omega_0, e^{-tH_l}\Omega_0)$ is a symmetric function of t and l.*

This content downloaded from 100.33.74.107 on Sat, 28 Feb 2026 03:57:10 UTC
All use subject to https://about.jstor.org/terms

This completes our discussion of the arrow that points from the cutoff $P(\phi)_2$ Markov theory to the cutoff $P(\phi)_2$ Hamiltonian theory in Fig. I.1. In the next section we consider the reverse direction, obtaining a second proof of Theorem II.14.

II.4. *The Feynman-Kac-Nelson Formula: A Second Proof.* Formula (II.32) has much the structure of the usual Feynman-Kac formula [51]:

$$(u(q), e^{-t(H_0+V(q))}v(q)) = \int dQ\overline{u(q(t))}e^{-\int_0^t V(q(s))ds}v(q(0)) . \tag{II.33}$$

The passage from points q to paths $q(s)$ in (II.33) corresponds to the passage from $\phi_F(x)$ to $\phi(x, s)$ in (II. 32); and the integration dQ over paths corresponds to the integration $d\mu_0$ over Euclidean Q-space. Thus the Markov theory looks like *path space* over the Hamiltonian theory. This suggests that there should be an alternate proof of Theorem II.14 starting with the Fock space Hamiltonian and using the Trotter product formula [62]. In fact, we prove a more general result that involves the following thicket of notation:

For $i = 0, 1, \cdots, n$ let G_i be a polynomially bounded function from $\mathbf{R}^{m_i} \to \mathbf{R}$, and let $f_i^{(1)}, \cdots, f_i^{(m_i)} \in F$ be real. Denote $G_i(\phi_F(f_i^{(1)}), \cdots, \phi_F(f_i^{(m_i)}))$ by $G_i(\phi_F)$ and $G_i(\phi(f_i^{(1)}, s), \cdots, \phi(f_i^{(m_i)}, s))$ by $G_i(\phi, s)$. For $i = 1, \cdots, n$, define the Hamiltonian $H_i = H_0 + V_i$, $V_i = \int g_i(x){:}P_i(\phi_F(x)){:}\, dx$, where P_i is a semibounded polynomial and the cutoff $g_i \in L^1 \cap L^{1+\varepsilon}(\mathbf{R})$. Then:

THEOREM II.16 (General Feynman-Kac-Nelson Formula). *Let $u, v \in L^p(Q_F)$ for some $p > 2$. For $t_1 \geqq 0, \cdots, t_n \geqq 0$*

$$\begin{aligned}&(u, G_n(\phi_F)e^{-t_nH_n}G_{n-1}(\phi_F) \cdots e^{-t_1H_1}G_0(\phi_F)v)\\ &\quad= \int d\mu_0\overline{(J_{s_n}u)} \textstyle\prod_{i=0}^n G_i(\phi, s_i)e^{-U}J_0v\end{aligned} \tag{II.34}$$

where $s_m = \sum_{i=1}^m t_i$, $s_0 = 0$, and $U = \sum_{i=1}^n \int_{s_{i-1}}^{s_i} ds \int dx g_i(x){:}P_i(\phi(x, s)){:}$.

Proof. By a limiting argument, it is sufficient to prove (II.34) in the case where the V_i's and G_i's are bounded, i.e., $V_1, \cdots, V_n, G_0, \cdots, G_n \in \mathfrak{M}_F$. We denote the multiplication operator $\alpha_\sigma(V_i)$ in $\mathfrak{M}^{(\sigma)}$ by $V_i^{(\sigma)}$ (see Lemma II.13). Then we prove

$$\begin{aligned}&(u, G_ne^{-t_n(H_0+V_n)}G_{n-1} \cdots e^{-t_1(H_0+V_1)}G_0v_n)\\ &\quad= \int d\mu_0\overline{(J_{s_n}u)} \textstyle\prod_{i=0}^n G_i^{(s_i)} \exp\left(-\sum_{i=1}^n \int_{s_{i-1}}^{s_i} ds\, V_i^{(s)}\right)J_0v .\end{aligned}$$

The integrals $\int ds\, V_i^{(s)}$ make sense since $V_i^{(s)}$ is continuous in measure (see Lemma II.6). So as not to obscure a simple proof with notational compli-

This content downloaded from 100.33.74.107 on Sat, 28 Feb 2026 03:57:10 UTC
All use subject to https://about.jstor.org/terms

cations, we content ourselves with the case $n = 1$; i. e., we show

$$(u, G_1 e^{-t(H_0+V)} G_0 v) = \int d\mu_0 \overline{(J_t u)} G_1^{(t)} e^{-\int_0^t V^{(s)} ds} G_0^{(0)} J_0 v \ . \tag{II.35}$$

The relation (II.35) follows from the equation ($\delta = t/m$)

$$(u, G_1 (e^{-\delta V} e^{-\delta H_0})^m G_0 v) = \int d\mu_0 \overline{(J_t u)} G_1^{(t)} \exp\left(-\textstyle\sum_{i=1}^m \delta V^{(i\delta)}\right) G_0^{(0)} J_0 v \ , \tag{II.36}$$

for the left side of (II.36) is the Trotter product approximation to the left side of (II.35), and the right side of (II.36) clearly converges to the right side of (II.35) as $m \to \infty$.

To prove (II.36) we write the ith factor $e^{-\delta V}$ (reading from right to left) as $J_{i\delta}^* e^{-\delta V^{(i\delta)}} J_{i\delta}$ by Lemma II.13(i); and we write the ith factor $e^{-\delta H_0}$ as $J_{i\delta}^* J_{(i-1)\delta}$ by Theorem II.4(ii). Since $E_s = J_s J_s^*$, the result is

$$(e^{-\delta V} e^{-\delta H_0})^m = J_{m\delta}^* e^{-\delta V^{(m\delta)}} E_{m\delta} E_{(m-1)\delta} \cdots E_{3\delta} E_{2\delta} e^{-\delta V^{(2\delta)}} E_{2\delta} E_\delta e^{-\delta V^{(\delta)}} E_\delta J_0 \ . \tag{II:37}$$

By the Markov property we may remove all of the E's in (II.37) to obtain the desired relation (II.36). □

Remarks 1. Related results and proofs appear in [1], [19], [73], [97].

2. By using the hypercontractive bounds of the next section, one can prove the FKN formula for u, v arbitrary in L^2, provided that G_0, G_n are bounded.

As we emphasized in the Introduction, the measure (II.25) associated with the cutoff $P(\phi)_2$ Markov field looks like a Gibbs' state in classical statistical mechanics. In statistical mechanics one can often take the space cutoff to infinity in one direction by finding a suitable "transfer matrix" (see e.g., [60]). The FKN formula shows us that the semigroup $e^{-tH(g)}$, generated by the spatially cutoff $P(\phi)_2$ Hamiltonian, is the *transfer matrix* for the cutoff $P(\phi)_2$ Markov theory.

THEOREM II.17. *For* $g \in L^1 \cap L^{1+\varepsilon}(\mathbf{R})$, *let* $\hat{H}(g) = H(g) - E_g$ *be the spatially cutoff* $P(\phi)_2$ *Hamiltonian, normalized so that* $\inf \sigma(\hat{H}(g)) = 0$, *and let* Ω_g *be its unique vacuum vector, normalized so that* $\|\Omega_g\| = 1$ *and* $(\Omega_g, \Omega_0) > 0$. *Let* $d\nu_t$ *be the measure associated with the* $P(\phi)_2$ *Markov theory with cutoff* $h(x, s) = g(x)\chi_{(-t,t)}(s)$. *For any* $f_1, \cdots, f_n \in F$ *and* $t_1 < t_2 < \cdots < t_n$,

$$\begin{aligned} &\lim_{t\to\infty} \int \phi(f_n, t_n) \cdots \phi(f_1, t_1) d\nu_t \\ &\quad = \left(\Omega_g, \phi_F(f_n) e^{-(t_n - t_{n-1})\hat{H}(g)} \cdots \phi_F(f_2) e^{-(t_2 - t_1)\hat{H}(g)} \phi_F(f_1) \Omega_g\right) . \end{aligned} \tag{II.38}$$

Proof. By the FKN formula (II.34),

This content downloaded from 100.33.74.107 on Sat, 28 Feb 2026 03:57:10 UTC
All use subject to https://about.jstor.org/terms

$$\text{(II.39)} \qquad \begin{aligned} &\int \phi(f_n, t_n) \cdots \phi(f_1, t_1) d\nu_t \\ &= \frac{(\Omega_0, e^{-(t-t_n)\hat{H}(g)}\phi_F(f_n) \cdots e^{-(t_2-t_1)\hat{H}(g)}\phi_F(f_1)e^{-(t_1+t)\hat{H}(g)}\Omega_0)}{(\Omega_0, e^{-2t\hat{H}(g)}\Omega_0)}, \end{aligned}$$

where we have simply multiplied numerator and denominator by the factor e^{2tE_g}. Define $f_t(x) = e^{-tx}$ on $[0, \infty)$. Since $|f_t(x)| \leqq 1$ and $\lim_{t\to\infty} f_t(x)$ is 0 if $x > 0$ and 1 if $x = 0$, it follows from the functional calculus that $\lim_{t\to\infty} e^{-t\hat{H}(g)} = P_0$, the spectral projection of $\hat{H}(g)$ for $E = 0$. In particular, $e^{-t\hat{H}(g)}\Omega_0 \underset{L^2}{\longrightarrow} (\Omega_g, \Omega_0)\Omega_g \neq 0$ as $t \to \infty$ and so the right side of (II.39) converges to the right side of (II.38). However, it should be noted that since the fields are unbounded, some care is needed. We write the numerator of the right side of (II.39) as

$$(e^{-(t-t_n-1)\hat{H}(g)}\Omega_0, Ae^{-(t_1+t-1)\hat{H}(g)}\Omega_0)$$

where $A = e^{-\hat{H}(g)}\phi_F(f_n) \cdots e^{-(t_2-t_1)\hat{H}(g)}\phi_F(f_1)e^{-\hat{H}(g)}$. A is bounded on account of the bounds $\pm\phi(f_j) \leqq \hat{H}(g) + \text{const.}$ [33], [42], and so we may take $t \to \infty$. □

Remarks. 1. By the higher order estimates of [81], A is bounded provided that $t_1 \leqq t_2 \leqq \cdots \leqq t_n$ so that the theorem extends to this case. Alternatively one can prove this extension by invoking the L^p-convergence of $e^{-t\hat{H}(g)}\Omega_0$ for all $p < \infty$ [106, p. 173] and the fact that $e^{-tH(g)}$ is bounded on each L^p.

2. Note that it is precisely the transfer matrix mechanism of statistical mechanics that is involved here: The positive nature of $T_g = e^{-\hat{H}(g)}$ ("positivity improving") leads to the Perron-Frobenius result that the largest eigenvalue of T_g is unique and thus only the eigenvector Ω_g corresponding to this eigenvalue survives in the limit $t \to \infty$.

3. Alternatively, one can use the L^p-convergence of $e^{-t\hat{H}(g)}\Omega_0$ to prove local L^p-convergence of the measures $d\nu_t$. For example, if $G \in \mathfrak{M}^{(\sigma)}$ for a fixed σ, then, as $s, t \to \infty$,

$$\left|\int G d\nu_t - \int G d\nu_s\right| \Big/ \| G \|_p \longrightarrow 0$$

uniformly in G, for any $p < \infty$.

4. By these methods, we can completely control the infinite volume limit for one-dimensional Markov fields: For $d = 1$, the free Markov field, which we denote by $q(s)$, does not have to be smeared in $s \in \mathbf{R}$ in order to give a family of well-defined Gaussian random variables with covariance (see (II.8)),

This content downloaded from 100.33.74.107 on Sat, 28 Feb 2026 03:57:10 UTC
All use subject to https://about.jstor.org/terms

$$\int q(s)q(t)d\mu_0 = (1/2)e^{-|s-t|} . \tag{II.40a}$$

If P is a semibounded polynomial we define the $P(\phi)_1$ Markov field theory with cutoff in the interval $[-b, b]$ to be the theory with measure (as in II.25),

$$d\nu_b = \frac{e^{-\int_{-b}^{b} P(q(s))ds} d\mu_0}{\int e^{-\int_{-b}^{b} P(q(s))ds} d\mu_0} . \tag{II.40b}$$

As in Theorem II.16, the Schwinger functions can be written for $-b \leqq -a \leqq t_1 \leqq t_2 \leqq \cdots \leqq t_n \leqq a \leqq b$,

$$\begin{aligned} S_b(t_1, \cdots, t_n) &= \int q(t_1) \cdots q(t_n) d\nu_b \\ &= \frac{(\Omega_0, e^{-(b-t_n)\hat{H}} q \cdots e^{-(t_2-t_1)\hat{H}} q e^{-(t_1+b)\hat{H}} \Omega_0)_{\mathcal{F}}}{(\Omega_0, e^{-2b\hat{H}} \Omega_0)_{\mathcal{F}}} \\ &= \frac{(J_{-a} e^{-(b-a)\hat{H}} \Omega_0, q(t_n) \cdots q(t_1) e^{-\int_{-a}^{a} P(q(s))ds} J_a e^{-(b-a)\hat{H}} \Omega_0)_{\mathfrak{N}}}{e^{-2aE} (\Omega_0, e^{-2b\hat{H}} \Omega_0)_{\mathcal{F}}} \end{aligned}$$

where Ω_0 is the vacuum in the usual occupation number space $\mathcal{F}$ for the harmonic oscillator, and $\hat{H} = H - E$ where $H = H_0 + P(q)$ is the Hamiltonian for the *anharmonic oscillator* and E is its ground state energy. Thus as the cutoff $b \to \infty$ we obtain by explicit cancellation the convergence

$$S_b(t_1, \cdots, t_n) \longrightarrow \left(J_{-a}\Omega, q(t_n) \cdots q(t_1) e^{-\int_{-a}^{a} P(q(s))ds} J_a \Omega\right) \tag{II.41}$$

where Ω is the vacuum vector for H.

THEOREM II.18. *Let P be a semibounded polynomial and consider the $P(\phi)_1$ Markov field theory with cutoff in the interval $[-b, b]$ defined by* (II.40). *As $b \to \infty$, the Schwinger functions converge as in* (II.41).

Remarks 1. For $P(q) = \lambda q^4$, $\lambda > 0$ small, Symanzik has proved this result by means of Kirkwood-Salzburg integral equation methods [111].

2. We shall give an alternate proof of the convergence by means of correlation inequalities in § V.4 when $P(q) = \sum_{n=0}^{m} a_n q^{2n}$ with $a_n \geqq 0$.

II.5. *Conditioned Theories.* We begin this subsection by introducing the method of *conditioning* which provides a general mechanism for "setting certain degrees of freedom equal to zero". In particular, this method allows us to describe theories with Dirichlet boundary conditions and will prove useful in Sections IV.3 and VI.1.

We fix $s = 1$ and $m > 0$ and we write $N = N_{2,m}$. If M is a closed subspace of N we let p_M be the orthogonal projection onto M and $P_M = \Gamma(p_M)$.

This content downloaded from 100.33.74.107 on Sat, 28 Feb 2026 03:57:10 UTC
All use subject to https://about.jstor.org/terms

If M consists of vectors supported in a region $\Lambda \subset \mathbf{R}^2$, then in terms of the notation of § II.1, $P_M = E_\Lambda$.

Definition. The field $\phi_M(x)$ conditioned on M is given for any $f \in N$ by

$$\phi_M(f) = \phi(p_M f) \ . \tag{II.42}$$

One should think of ϕ_M as "that part of the field associated with the degrees of freedom in M". Corresponding to the decomposition $N = M \oplus M^\perp$ we have the decompositions $\phi = \phi_M + \phi_{M^\perp}$, and $\mathfrak{N} = \mathfrak{N}_M \otimes \mathfrak{N}_{M^\perp}$. We also obtain the decompositions of Q-space, $Q = Q_M \times Q_{M^\perp}$, and of the free measure, $d\mu_0 = d\mu_0^{(M)} \otimes d\mu_0^{(M^\perp)}$, where $(Q_M, d\mu_0^{(M)})$ is the Q-space built over the fields $\phi(f)$, $f \in M$, and similarly for $M^\perp$. In terms of conditional expectations this statement means the following: Let Σ_M be the σ-algebra generated by the fields $\phi_M(f)$, and let $u \in L^1(Q, d\mu_0)$. Then $\int u d\mu_0^{(M)} \equiv E[u \mid \Sigma_{M^\perp}]$, which is a function of the "variables in $M^\perp$", and similarly $\int u d\mu_0^{(M^\perp)} \equiv E[u \mid \Sigma_M]$. The full integral $\int u d\mu_0$ can be evaluated by

$$\int u d\mu_0 = \int \left(\int u d\mu_0^{(M)} \right) d\mu_0^{(M^\perp)} = E[E[u \mid \Sigma_{M^\perp}] \mid \Sigma_M] \ ,$$

which is a complex number since by orthogonality these are the only functions which are both Σ_M- and $\Sigma_{M^\perp}$-measurable. We define Wick powers by the usual prescription for ordering A and A^*:

$$\begin{aligned} :\phi_M^n(x): = (2\pi)^{-n} \int \sum\nolimits_j \binom{n}{j} A^*(k_1) \cdots A^*(k_j) A(-k_j) \cdots A(-k_n) \\ \cdot e_M^{-ix\cdot(k_1+\cdots+k_n)} dk \ . \end{aligned} \tag{II.43}$$

Here the "exponential" is defined for $f \in L^2(\mathbf{R}^2)$ by

$$(2\pi)^{-n} \int e_M^{-ix\cdot(k_1+\cdots+k_n)} f(x) d^2x = p_M^{\otimes n} \hat{f}(k_1 + \cdots + k_n) \tag{II.44}$$

where $\hat{f}(k_1 + \cdots + k_n)$ is regarded as an element of the n-particle subspace $\mathfrak{N}_n$ and the n-fold tensor operator product $p_M^{\otimes n} = P_M \restriction \mathfrak{N}_n$. If the reader prefers he may replace the Wick powers (II.43) by regularized Wick powers,

$$:\phi_{M,h}^n(x): = \int \sum \binom{n}{j} A^*(k_1) \cdots A(-k_n) \cdot p_M^{\otimes n}(\hat{h}(k_1) \cdots \hat{h}(k_n) e^{-ix\cdot(k_1+\cdots+k_n)}) dk \ ,$$

where $h \in C_0^\infty(\mathbf{R}^2)$, and then take the limit $h \to \delta$ afterwards. By orthogonality

$$:\phi_M^j(x)\phi_{M^\perp}^k(x): = :\phi_M^j(x): :\phi_{M^\perp}^k(x): \ ,$$

and so we note the formula

This content downloaded from 100.33.74.107 on Sat, 28 Feb 2026 03:57:10 UTC
All use subject to https://about.jstor.org/terms

$$:\phi^n(x): = \sum_{j=0}^{n} \binom{n}{j} :\phi_M^j(x): :\phi_{M^\perp}^{n-j}(x): . \tag{II.45}$$

In terms of the semibounded polynomial P and spatial cutoff g the conditioned interaction is defined by

$$U_M(g) = \left(\int :P(\phi_M(x)): g(x)dx\right)\omega_0 . \tag{II.46}$$

Definition. The $P(\phi)_2$ Markov field theory *conditioned on* M and with non-negative spatial cutoff $g \in L^1 \cap L^{1+\varepsilon}(\mathbf{R}^2)$ is the triple $\langle \phi_M, Q_M, d\nu_g^{(M)} \rangle$ where $d\nu_g^{(M)}$ is the measure on Q_M defined by

$$d\nu_g^{(M)} = \frac{e^{-U_M(g)} d\mu_0^{(M)}}{\int e^{-U_M(g)} d\mu_0^{(M)}} . \tag{II.47}$$

In particular the (smeared) Schwinger functions for this conditioned theory are given by

$$S_{M,g}(h_1, \cdots, h_n) = \int \phi_M(h_1) \cdots \phi_M(h_n) d\nu_g^{(M)}$$

where $h_j \in C_0^\infty(\mathbf{R}^2)$. Thus $d\nu_g^{(M)}$ is the measure obtained from $d\nu_g$ by writing $\phi = \phi_M + \phi_{M^\perp}$ and formally replacing $\phi_{M^\perp}$ by 0. The conditioned theory can be thought of as the theory obtained "when the degrees of freedom in $M^\perp$ are set equal to zero".

Conditioned expectations can be rewritten in terms of the full theory as follows:

LEMMA II.19. *Given a theory conditioned on M, we have in terms of the interaction $U(g)$ for the* (unconditioned) *theory,*

$$\int e^{-U_M(g)} d\mu_0^{(M)} = \int e^{-P_M U(g)} d\mu_0 \tag{II.48}$$

and

$$S_{M,g}(h_1, \cdots, h_n) = \frac{\int \phi(p_M h_1) \cdots \phi(p_M h_n) e^{-P_M U(g)} d\mu_0}{\int e^{-P_M U(g)} d\mu_0} . \tag{II.49}$$

Proof. From the definition (II.43), or by integrating (II.45) with respect to $d\mu_0^{(M^\perp)}$,

$$P_M :\phi^n(x): \omega_0 = :\phi_M^n(x): \omega_0 ,$$

so that

$$U_M(g) = P_M U(g) . \tag{II.50}$$

This content downloaded from 100.33.74.107 on Sat, 28 Feb 2026 03:57:10 UTC
All use subject to https://about.jstor.org/terms

The identities (II.48) and (II.49) follow from (II.50) and the facts that $U_M(g)$ is independent of the variables $q^{(M^\perp)}$ in $M^\perp$ and that $d\mu_0 = d\mu_0^{(M)} \otimes d\mu_0^{(M^\perp)}$. □

Since $P_M u = E[u \mid \Sigma_M]$, (II.49) can be rewritten as

$$S_{M,g}(h_1, \cdots, h_n) = \frac{\int E[\phi(h_1) \mid \Sigma_M] \cdots E[\phi(h_n) \mid \Sigma_M] e^{-E[U(g) \mid \Sigma_M]} d\mu_0}{\int e^{-E[U(g) \mid \Sigma_M]} d\mu_0} . \tag{II.51}$$

It is because of (II.51) that we use the term "conditioned theory". The following inequality is basic:

LEMMA II.20. *Let M be any subspace of N. Under the usual assumptions on $U(g)$,*

$$\int e^{-U_M(g)} d\mu_0^{(M)} \leqq \int e^{-U(g)} d\mu_0 . \tag{II.52}$$

Proof. By Jensen's inequality (otherwise known as the arithmetic-geometric mean inequality),

$$e^{-E[U(g) \mid \Sigma_M]} \leqq E[e^{-U(g)} \mid \Sigma_M] ,$$

or, equivalently,

$$e^{-U_M(g)} \leqq \int e^{-U(g)} d\mu_0^{(M^\perp)} . \tag{II.53}$$

The lemma follows upon integrating (II.53). □

COROLLARY II.21. *For any $p < \infty$,*

$$\| e^{-U_M(g)} \|_p \leqq \| e^{-U(g)} \|_p . \tag{II.54}$$

There is a natural extension of the notion of conditioning. Suppose we can realize Q as $Q_1 \times Q_2$ in such a way that $d\mu_0$ factors into $d\mu_0^{(1)} \times d\mu_0^{(2)}$. Given a random variable f on Q we can define f_1 on Q_1 by

$$f_1(q_1) = \int f(q_1, q_2) d\mu_0^{(2)}(q_2)$$

whenever $f \in L^1(Q, d\mu_0)$. In particular, Lemma II.20 and Corollary II.21 extend to such a situation which we will call *generalized conditioning*. Given two free theories, we can ask when one can be obtained from the other by generalized conditioning. The answer is simple:

PROPOSITION II.22. *Let $\mathcal{T}$ be a space of real-valued test functions on $\mathbf{R}^d$. Suppose that ϕ and ϕ_1 are Gaussian random fields indexed by $\mathcal{T}$ with means 0 and covariances $S(x, y) = \langle \phi(x)\phi(y) \rangle$ and $S_1(x, y) = \langle \phi_1(x)\phi_1(y) \rangle_1$. Then a necessary and sufficient condition that the theory (ϕ_1, S_1) may be*

This content downloaded from 100.33.74.107 on Sat, 28 Feb 2026 03:57:10 UTC
All use subject to https://about.jstor.org/terms

obtained from (ϕ, S) *by generalized conditioning is that* $S_2 = S - S_1$ *be a positive semi-definite operator on* $\mathcal{T}$.

Proof. If ϕ_1 is obtained by generalized conditioning, then by (the generalization of) Lemma II.20, $\int \exp(-\phi_1(f))d\mu_0^{(1)} \leqq \int \exp(-\phi(f))d\mu_0$. Since $\int \exp(-\phi(f))d\mu_0 = \exp(1/2\langle\phi(f)\phi(f)\rangle)$ for Gaussian random fields, the positive semi-definiteness of S_2 follows. Conversely, if S_2 is positive semi-definite, we can, by standard methods [24, p. 335], construct a Gaussian random field ϕ_2 on a space Q_2. Let $\tilde{Q} = Q_1 \times Q_2$ with measure $d\tilde{\mu}_0 = d\mu_0^{(1)} \times d\mu_0^{(2)}$. Then $\tilde{\phi}(f) = \phi_1(f) + \phi_2(f)$ is clearly a Gaussian random field with covariance S and mean 0. □

Remark. Suppose $\|f\|_S = \langle\phi(f)\phi(f)\rangle^{1/2}$ is a norm on $\mathcal{T}$ and that $\mathcal{T}$ is complete (we can always arrange this by taking a quotient and completing). Then we can find a unique positive self-adjoint operator A with $0 \leqq A \leqq 1$ so that $\langle\phi_1(f)\phi_1(f)\rangle_1 = \|Af\|_S^2$. Then $\phi_1(f)$ can be realized as $\phi(Af)$ and the interaction U_1 as $\Gamma(A)U$. We thus see that generalized conditioning extends conditioning precisely by replacing projections with arbitrary operators A with $0 \leqq A \leqq 1$.

Before turning to a class of examples, we note the following convergence theorem:

THEOREM II.23 (Conditioning Convergence Theorem). *Let* $M, M_1, M_2, \cdots$ *be subspaces of* N *with corresponding projections* $p, p_1, p_2, \cdots$ *and biquantizations* $P, P_1, \cdots$. *Suppose that* $s\text{-}\lim p_n = p$. *Let* $U = \int :Q(\phi(x)):g(x)dx\omega_0$ *in terms of the semibounded polynomial* Q *and standard space cutoff* g. *Then*

$$\lim_{n\to\infty} \int e^{-P_n U} d\mu_0 = \int e^{-PU} d\mu_0 , \tag{II.55}$$

and for any $h_1, \cdots, h_r \in C_0^\infty(\mathbf{R}^2)$,

$$\lim_{n\to\infty} \int \phi(p_n h_1) \cdots \phi(p_n h_r) e^{-P_n U} d\mu_0 = \int \phi(ph_1) \cdots \phi(ph_r) e^{-PU} d\mu_0 . \tag{II.56}$$

In particular, the Schwinger functions conditioned on M_n *converge to the Schwinger functions conditioned on* M.

Proof. Since $p_n \to p$, $\phi(p_n h_j) \to \phi(ph_j)$ in $L^2(Q, d\mu_0)$ and hence by (II.23) in all L^q with $q < \infty$. Similarly $P_n U \to PU$ in L^q-norm with $q < \infty$. By Corollary II.21 and Theorem II.10 (iii) we have $\|e^{-P_n U}\|_q \leqq \|e^{-PU}\|_q < \infty$ for each $q < \infty$. We conclude from the inequality (II.24) and Hölder's

This content downloaded from 100.33.74.107 on Sat, 28 Feb 2026 03:57:10 UTC
All use subject to https://about.jstor.org/terms

inequality that $e^{-P_n U} \to e^{-PU}$ in each L^q, $q < \infty$. (II.55) and (II.56) follow immediately. □

Remark. This theorem extends to generalized conditioning, in which case $p, p_1, p_2, \cdots$, are replaced by $a, a_1, a_2, \cdots$, with $0 \leqq a_n \leqq 1$ and $a = s\text{-}\lim a_n$. In fact, for convergence, the condition $0 \leqq a_n \leqq 1$ is not needed as long as a and all the a_n are bounded.

Example 1 (*Dirichlet Boundary Conditions*). Given an open region $\Lambda \subset \mathbf{R}^2$, there are a variety of procedures for introducing B.C. on $\partial\Lambda$ which differ from the free ones used thus far. In this paper we shall obtain Dirichlet B.C. by the following equivalent methods (see also [69]):

(i) take as covariance operator $(-\Delta_\Lambda^D + m^2)^{-1}$, where $-\Delta_\Lambda^D$ is the Laplacian with Dirichlet B.C. on $\partial\Lambda$;

(ii) condition on Λ^{ext} (see Theorem II.28);

(iii) add a boundary interaction $\lim_{\sigma\to\infty} \sigma \int_{\partial\Lambda} :\phi^2:$ (see (II.77) and (V.19));

(iv) require the boundary variable to vanish by inserting (formally) an appropriate δ function (see Theorem II.33);

(v) in the lattice approximation of § IV, add a non-local quadratic interaction on the boundary (see Theorems IV.7 and IV.10).

We begin by describing method (i) in terms of the standard theory of the Friedrichs extension (see, e.g., [64] or [77, §§ VIII.6, X.3]). We shall generally suppress subscripts Λ on Λ-dependent objects. The operator $A^D \equiv -\Delta_\Lambda^D + m^2$ on $L^2(\mathbf{R}^2, d^2x)$ is defined as the Friedrichs extension of the positive symmetric operator $(-\Delta + m^2) \restriction C_0^\infty(\Lambda)$. Let $A = [(-\Delta + m^2) \restriction C_0^\infty(\mathbf{R}^2)]^-$ denote the self-adjoint extension with free boundary conditions. The domain $D(A^D)$ is contained in the form domain $Q(-\Delta_\Lambda^D + m^2) \equiv \mathcal{H}_{+1}(\Lambda)$ which is defined as the closure of $C_0^\infty(\Lambda)$ in the norm

$$\text{(II.57)} \qquad \| f \|_{+1}^2 = \int [(\nabla f)^2 + m^2 f^2] d^2x = (f, (-\Delta + m^2) f) ;$$

here $(\cdot, \cdot)$ denotes the inner product on $L^2(\mathbf{R}^2, d^2x)$. (Note that we are working with real-valued functions.) Similarly $\mathcal{H}_{+1}(\mathbf{R}^2)$ is the closure of $C_0^\infty(\mathbf{R}^2)$ in the norm (II.57). We define $\mathcal{H}_{-1}(\mathbf{R}^2)$ as the closure of $C_0^\infty(\mathbf{R}^2)$ in the norm obtained from the inner product

$$\text{(II.58a)} \qquad \langle f, g \rangle_{-1} = (f, A^{-1} g) ,$$

and $\mathcal{H}_{-1}(\Lambda)$ as the closure of $C_0^\infty(\Lambda)$ in the norm obtained from the inner product

$$\text{(II.58b)} \qquad \langle f, g \rangle_{-1,\Lambda} = (f, (A^D)^{-1} g) .$$

This content downloaded from 100.33.74.107 on Sat, 28 Feb 2026 03:57:10 UTC
All use subject to https://about.jstor.org/terms

Note that $\mathcal{H}_{-1}(\mathbf{R}^2)$ is just the real part of N. In the scale of Hilbert spaces,

$$\mathcal{H}_{+1}(\Lambda) \subset L^2(\Lambda, d^2x) \subset \mathcal{H}_{-1}(\Lambda) ,$$

$\mathcal{H}_{\pm 1}(\Lambda)$ are dual, and A^D is just the L^2-valued restriction of the duality map $\hat{A}^D$ from $\mathcal{H}_{+1}(\Lambda)$ onto $\mathcal{H}_{-1}(\Lambda)$ given by the Riesz Representation Theorem [77]. The same remark applies if Λ, A^D, $\hat{A}^D$ are replaced by $\mathbf{R}^2$, A, $\hat{A}$ respectively. If f, $g \in \mathcal{H}_{+1}(\Lambda) \subset \mathcal{H}_{+1}(\mathbf{R}^2)$, then by the above definition $(f, \hat{A}^D g) = (f, \hat{A}g)$. Thus, if we associate an element $\hat{A}^D g$ of $\mathcal{H}_{-1}(\Lambda)$ with $\hat{A}g$ in $\mathcal{H}_{-1}(\mathbf{R}^2)$, we obtain the natural embedding

$$\mathcal{H}_{-1}(\Lambda) \subset \mathcal{H}_{-1}(\mathbf{R}^2) . \tag{II.59}$$

The connection with the theory of conditioning is provided by

LEMMA II.24. *Let p be the projection in $\mathcal{H}_{-1}(\mathbf{R}^2)$ onto the orthogonal complement of all those distributions in $\mathcal{H}_{-1}(\mathbf{R}^2)$ with support in $\Lambda' = \mathbf{R}^2 \backslash \Lambda$. For any $h \in \mathcal{H}_{-1}(\Lambda)$,*

$$(-\Delta_\Lambda^D + m^2)^{-1} h = (-\Delta + m^2)^{-1} ph . \tag{II.60}$$

Remark. In terms of our previous notation, $p = I - e_{\Lambda'}$, which is *not* the same as e_Λ.

Proof. Let $f \in \mathcal{H}_{-1}(\mathbf{R}^2)$, $g_n \in C_0^\infty(\Lambda)$, and $h_n = A^D g_n$. Then since $(I - p)f$ has support in Λ', $((I - p)f, g_n) = 0$, so that

$$(f, A^{-1}ph_n) = \langle f, ph_n \rangle_{-1} = (pf, A^{-1}h_n) = (pf, g_n) = (f, g_n) = \big(f, (A^D)^{-1}h_n\big) .$$

Thus $(A^D)^{-1}h_n = A^{-1}ph_n$ and (II.60) follows upon taking limits. □

COROLLARY II.25. *If f, $g \in \mathcal{H}_{-1}(\Lambda)$, then*

$$\langle f, g \rangle_{-1,\Lambda} = \langle pf, pg \rangle_{-1} . \tag{II.61}$$

COROLLARY II.26. *The norms $\| \cdot \|_{-1}$ and $\| \cdot \|_{-1,\Lambda}$ defined by* (II.58) *satisfy $\| f \|_{-1,\Lambda} \leqq \| f \|_{-1}$.*

By following our construction of the free Markov field in § II.1, we can construct a Gaussian random field ϕ^D over $\mathcal{H}_1(\Lambda)$ with covariance

$$\int \phi^D(f)\phi^D(g) d\mu_0^D = \langle f, g \rangle_{-1,\Lambda} . \tag{II.62}$$

Given a non-negative function $g \in L^1 \cap L^{1+\varepsilon}(\Lambda)$ and a semibounded polynomial P, we can form the interaction

$$U^D(g) = \int_\Lambda g(x) :P\big(\phi^D(x)\big): d^2x\omega_0 \tag{II.63}$$

which, by virtue of Corollary II.26, has the same L^p properties as $U(g)$ (cf. Theorem II.10). Then

This content downloaded from 100.33.74.107 on Sat, 28 Feb 2026 03:57:10 UTC
All use subject to https://about.jstor.org/terms

Definition. The full Dirichlet $P(\phi)_2$ Markov field theory with cutoff g in the region Λ is the theory with measure

$$d\nu_g^D = \frac{e^{-U^D(g)}d\mu_0^D}{\int e^{-U^D(g)}d\mu_0^D} . \tag{II.64}$$

Remark. The *full* Dirichlet theory is to be distinguished from the *half* Dirichlet theory which we define below in (II.91).

If $g = \chi_\Lambda$, the characteristic function of Λ, we write $d\nu_\Lambda^D$, U_Λ^D for $d\nu_g^D$, $U^D(g)$, and we call the theory the *Dirichlet theory in region* Λ. We denote by Σ_R^D the σ-algebra generated by the fields $\phi^D(f)$ with $\operatorname{supp} f \subset R$. Since $-\Delta_\Lambda^D$ is a local operator we obtain, as in Corollary II.5:

PROPOSITION II.27. *The Dirichlet theory in the region Λ is Markov in the sense that if R is compact in Λ and u is measurable with respect to $\Sigma_{\Lambda\setminus R}^D$, then*

$$E[u \mid \Sigma_R^D] = E[u \mid \Sigma_{\partial R}^D] .$$

The main point of this discussion is that the Dirichlet theory is a conditioned theory:

THEOREM II.28. *Let Λ be an open, bounded set in $\mathbf{R}^2$ and let M be the subspace of N orthogonal to the elements of N supported in Λ'. Then the $P(\phi)_2$ theory with cutoff g conditioned on M is identical to the full Dirichlet $P(\phi)_2$ theory with cutoff $h = g\chi_\Lambda$ in the region Λ. In particular,*

$$\int \phi(p_M f_1) \cdots \phi(p_M f_n) e^{-P_M U(g)} d\mu_0 = \int \phi^D(f_1) \cdots \phi^D(f_n) e^{-U^D(h)} d\mu_0^D ,$$

where $f_j \in \mathcal{H}_{-1}(\Lambda)$.

Proof. It is sufficient to observe that by Corollary II.25 the covariance matrices are the same for the corresponding free theories. □

There is another way of looking at Dirichlet B.C. which is very useful for comparison with other B.C. (cf. [35]). Let C be a simple closed curve in $\mathbf{R}^2$. C divides $\mathbf{R}^2$ into a bounded open region Λ and an unbounded open region $\tilde{\Lambda}$. Let B be the subspace of N with elements supported on C and let M be the subspace of N orthogonal to the elements supported in $\Lambda' = \mathbf{R}^2\setminus\Lambda$. By the Markov property, if $f \in N$ has support in Λ, then $p_{M^\perp} f = p_B f$, or $p_M f = p_{B^\perp} f$. We conclude that:

(i) If f and g have support in Λ, then

$$\langle p_{B^\perp} f, p_{B^\perp} g\rangle = \langle p_M f, p_M g\rangle .$$

(ii) If f has support in Λ and g has support in Λ', then

This content downloaded from 100.33.74.107 on Sat, 28 Feb 2026 03:57:10 UTC
All use subject to https://about.jstor.org/terms

$$\langle p_{B^\perp} f, p_{B^\perp} g\rangle = \langle p_M f, g\rangle = 0 .$$

We have thus proved:

THEOREM II.29. *Let C be a simple closed curve in $\mathbf{R}^2$ and let Λ be the bounded open region interior to C. Let B be the subspace of N supported on C, and M the subspace orthogonal to the elements supported in Λ'. Then the field theory conditioned on $B^\perp$ factors into the form $\langle \phi_{B^\perp}, Q_M \times Q_{M^\perp}, d\mu_0^{(M)} \times d\mu_0^{(M^\perp)}\rangle$, where:*

(i) *If $x \in \Lambda$, then $\phi_{B^\perp}(x)$ is a function only of the variables in Q_M.*

(ii) *The set of fields $\{\phi_{B^\perp}(x) \mid x \in \Lambda\}$ on $(Q_M, d\mu_0^{(M)})$ is identical with the set of Dirichlet fields on Λ.*

In particular, if g has support in Λ, then the expectations of products of fields in Λ for the theory conditioned on $B^\perp$ are identical to those of the full Dirichlet theory in Λ.

Example 2 (*Additional Dirichlet Conditions*). Let Λ_1 and Λ_2 be two disjoint bounded open regions with piecewise smooth boundaries. Suppose that $\partial\Lambda_1$ and $\partial\Lambda_2$ have a part D in common, and let Λ be the interior of $\Lambda_1 \cup \Lambda_2 \cup D$. Then one obtains the Dirichlet state for $\Lambda_1 \cup \Lambda_2$ from the Dirichlet state for Λ by conditioning, i.e., by setting the field equal to zero on D. Furthermore, the Dirichlet state for $\Lambda_1 \cup \Lambda_2$ factors into a product of the Dirichlet states for Λ_1 and Λ_2. By applying Lemma II.20 we obtain inequalities of the form

$$\int e^{-U^D_{\Lambda_1}} d\mu_0^{D,\Lambda_1} \int e^{-U^D_{\Lambda_2}} d\mu_0^{D,\Lambda_2} \leqq \int e^{-U^D_{\Lambda}} d\mu_0^{D,\Lambda} , \tag{II.65}$$

which will be used in § VI.1.

Example 3 (*Lattice Approximation*). The lattice approximation of § IV can be viewed as a conditioned theory in the generalized sense discussed in the remark after Theorem II.23.

Although we consider only the free and Dirichlet B.C. in detail in this paper, we wish to give a brief discussion of other B.C. when $d = 1$ (harmonic oscillator theory). The two-point correlation function for the case of free B.C. is given by the free Green's function of (II.40a),

$$G_0(x, y) = \frac{1}{2} e^{-|x-y|} \tag{II.66}$$

where we have set the mass $m = 1$. If we consider the theory on an interval $[a_1, a_2]$ we can consider the classical B.C.,

$$\frac{\partial f}{\partial n} = (1 + \sigma) f , \tag{II.67}$$

This content downloaded from 100.33.74.107 on Sat, 28 Feb 2026 03:57:10 UTC
All use subject to https://about.jstor.org/terms

where $\partial/\partial n$ is the inward normal derivative and σ is a parameter in the interval $[-1, \infty)$:

Example 4 (*Classical* B.C.; $d=1$). The Green's function corresponding to the B.C. (II.67) on the interval $[a_1, a_2]$ is given by

$$G_\sigma(x, y) = G_0(x, y) - R_\sigma(x, y) , \tag{II.68}$$

where

$$R_\sigma(x, y) = c(\sigma)A(x, y) - d(\sigma)B(x, y) ,$$

$$A(x, y) = \frac{1}{2}[e^{-|x-a_1|-|y-a_1|} + e^{-|x-a_2|-|y-a_2|}] ,$$

$$B(x, y) = \frac{1}{2}[e^{-|x-a_1|-|y-a_2|} + e^{-|x-a_2|-|y-a_1|}] ,$$

$$c(\sigma) = \frac{\sigma(2 + \sigma)}{(2 + \sigma)^2 - \lambda^2\sigma^2} ,$$

and

$$d(\sigma) = \frac{\lambda\sigma^2}{(2 + \sigma)^2 - \lambda^2\sigma^2} ,$$

with $\lambda = e^{a_1-a_2}$. In particular, we obtain free B.C. when $\sigma = 0$, Neumann B.C. when $\sigma = -1$, and Dirichlet B.C. in the limit $\sigma \to \infty$. As in the cases of free and Dirichlet B.C., we can construct the free field with the B.C. "σ" of (II.67) by taking the Green's function (II.68) as the basic covariance matrix.

What is relevant for our purposes is that the rank 2 integral operator R_σ is positive (negative) semi-definite when σ is positive (negative). This follows from the observation that R_σ is semi-definite (with the sign of $c(\sigma)$) if and only if

$$|d(\sigma)| \leqq |c(\sigma)| . \tag{II.69}$$

More generally, it is not difficult to show that

$$R_{\sigma_1} \leqq R_{\sigma_2} \text{ if } \sigma_1 \leqq \sigma_2 . \tag{II.70}$$

This is the well-known monotonicity property of classical B.C. (see e.g., [8]). We emphasize that this monotonicity (positive definiteness) is distinct from the monotonicity (pointwise positivity) discussed in the final remark of this subsection.

Thus according to Proposition II.22, the theory with B.C. "σ_2" can be obtained by conditioning from the theory with B.C. "σ_1" if $\sigma_1 \leqq \sigma_2$. In the passage from σ_1 to σ_2 two degrees of freedom are set equal to zero. As an explicit example, free B.C. can be obtained by conditioning from Neumann B.C. since (with $a_1 = 0$, $a_2 = 1$)

This content downloaded from 100.33.74.107 on Sat, 28 Feb 2026 03:57:10 UTC
All use subject to https://about.jstor.org/terms

$$G_N - G_0 = \frac{1}{2}e^{-x}e^{-y} + \frac{1}{2(e^2-1)}(e^x + e^{-x})(e^y + e^{-y})$$

is positive definite.

Example 5 (*Periodic* B.C.; $d = 1$). The free field with periodic B.C. on the interval $[a_1, a_2]$ is defined using the periodic Green's function

$$\begin{aligned} G_P(x, y) &= G_0(x, y) + \frac{1}{1-\lambda}B(x, y) \\ &= \frac{1}{2}e^{-|x-y|} + \frac{\lambda}{2(1-\lambda)}[e^{x-y} + e^{y-x}] \,. \end{aligned} \tag{II.71}$$

The difference

$$G_P - G_\sigma = c(\sigma)A - \left(d(\sigma) - \frac{1}{1-\lambda}\right)B$$

will be semi-definite by the criterion (II.69) if and only if $|d(\sigma) - 1/(1-\lambda)| \leqq |c(\sigma)|$. This inequality is satisfied only for the extreme values $\sigma = -1$ and ∞, and we conclude that periodic B.C. are not comparable to "σ" B.C. if $-1 < \sigma < \infty$ but that Dirichlet B.C. can be obtained by conditioning from periodic B.C. which can in turn be obtained from Neumann B.C. Explicitly we have on [0, 1] that the differences

$$G_N - G_P = \frac{1}{2(e^2-1)}(e^{1-x} - e^x)(e^{1-y} - e^y)$$

and

$$G_P - G_D = \frac{1}{2(e^2-1)}(e^{1-x} + e^x)(e^{1-y} + e^y)$$

are positive definite.

We can summarize the above state of affairs by the diagram:

$$\begin{tikzcd}
 & \text{Free}\ \sigma=0 \arrow[dr, "2"] & \\
\text{Neumann}\ \sigma=-1 \arrow[ur, "2"] \arrow[rr, "2"] \arrow[dr, "1"'] & & \text{Dirichlet}\ \sigma=\infty \\
 & \text{Periodic} \arrow[ur, "1"'] &
\end{tikzcd}$$

FIGURE II.3

where theory b) can be obtained from theory a) by conditioning on an n-dimensional subspace if an arrow labelled with the integer n points from theory a) to theory b).

Remarks 1. In fact, between the values $\sigma = -1$ and $\sigma = \infty$, there are a continuum of theories with B.C. (II.67) which can be obtained from

This content downloaded from 100.33.74.107 on Sat, 28 Feb 2026 03:57:10 UTC
All use subject to https://about.jstor.org/terms

one another by conditioning on a 2-dimensional subspace.

2. It is not a contradiction that B.C. "σ_1" can be obtained from B.C. "σ_2" if $\sigma_1 < \sigma_2$ in one step by adding two degrees of freedom or in several steps by adding two degrees of freedom at each step. This merely expresses the fact that a positive definite rank-two matrix can be written as a sum of positive definite rank-two matrices.

3. We point out that while $G_P - G_0$ is neither positive nor negative semi-definite, it is pointwise positive.

4. In a future paper we shall extend the conditioning relations of Fig. II.3 to dimensions $d > 1$, and use these relations in studying the question of independence of the pressure on B.C. [125].

We now describe how the above B.C. for $d = 1$ can be obtained by means of boundary terms (method (iii)). Define q as the positive closed quadratic form

$$q(g, f) = \int_{a_1}^{a_2} (g'f' + gf)dx \tag{II.72}$$

with domain $Q(q)$ consisting of absolutely continuous functions on $[a_1, a_2]$ with a derivative in $L^2[a_1, a_2]$ (see [52] or [77] for the basic theory of quadratic forms). Consider the following boundary forms

$$b(g, f) = g(a_1)f(a_1) + g(a_2)f(a_2) , \tag{II.73a}$$

$$b_\pm(g, f) = \big(g(a_2) \pm g(a_1)\big)\big(f(a_2) \pm f(a_1)\big) , \tag{II.73b}$$

$$c(g, f) = g(a_1)f(a_2) + g(a_2)f(a_1) . \tag{II.73c}$$

All of these are small form perturbations of q and so we may define the positive closed forms with domains $Q(q)$,

$$q_\sigma = q + (\sigma + 1)b , \tag{II.74a}$$

$$q_{P,\sigma} = q + (\sigma + 1)b_- . \tag{II.74b}$$

The operator $A_\sigma = -(d^2/dx^2) + 1$ with B.C. (II.67) is the unique positive self-adjoint operator associated with q_σ; i.e., $q_\sigma(g, f) = (g, A_\sigma f)$ for $g \in Q(q)$ and $f \in D(A_\sigma) \subset Q(q)$. The Dirichlet form q_∞ is defined by monotone convergence: $q_\infty = \lim_{\sigma\to\infty} q_\sigma$. Similarly we define

$$q_P = \lim_{\sigma\to\infty} q_{P,\sigma} .$$

The operator $A_P = -(d^2/dx^2) + 1$ with periodic B.C. is the operator corresponding to q_P; for the B.C. associated with $q_{P,\sigma}$ are

This content downloaded from 100.33.74.107 on Sat, 28 Feb 2026 03:57:10 UTC
All use subject to https://about.jstor.org/terms

$$\frac{\partial f}{\partial n}(a_2) = (1+\sigma)\big(f(a_2) - f(a_1)\big)\,,$$

$$-\frac{\partial f}{\partial n}(a_1) = (1+\sigma)\big(f(a_2) - f(a_1)\big)$$

which become $f(a_2) = f(a_1)$ and $(df/dx)(a_2) = (df/dx)(a_1)$ in the limit $\sigma \to \infty$. In addition we can arrange for antiperiodic B.C. by perturbing q by b_+, or we can allow different B.C. at a_1 and a_2 by using different values of σ at a_1 and a_2 in the definition (II.73a).

Note that this formulation in terms of quadratic forms explains the relations of Fig. II.3. For q_σ is obviously increasing in σ; q_P is not comparable to any q_σ except $q_{-1} \equiv q_N$ and $q_\infty \equiv q_D$, in terms of which we have

$$q_N(f, f) \leqq q_P(f, f) \leqq q_D(f, f)\,.$$

The latter inequality follows from

$$q_{P,\sigma}(f, f) = q_{2\sigma}(f, f) - (\sigma + 1)b_+(f, f)\,.$$

Note, moreover, that q_P differs from q_N and q_D by a rank-1 form (i.e., a multiple of $b_\pm$), whereas any two q_σ differ by a rank-2 form (i.e., a multiple of b).

There is a convenient representation for the operators A_σ and $A_{P,\sigma}$ defined by the forms (II.74). We write B, $B_\pm$, C for the formal operators associated with the forms (II.73); for example B has integral kernel $B(x, y) = \delta(x - a_1)\delta(y - a_1) + \delta(x - a_2)\delta(y - a_2)$. We define the generalized sum $A \dotplus B$ of two (possibly formal) operators A and B as the operator defined by the sum of the corresponding forms $a + b$, provided $a + b$ defines a unique operator. As referred to above, this will be the case if $a + b$ is a densely defined, closed, semibounded form. By $-(d^2/dx^2) + 1$ we mean the operator on $L^2[a_1, a_2]$ whose inverse has $G_0(x, y)$ as kernel. Then

LEMMA II.30. *For* $-1 \leqq \sigma < \infty$,

$$A_\sigma = \left(-\frac{d^2}{dx^2} + 1\right) \dotplus \sigma B\,, \tag{II.75a}$$

$$A_{P,\sigma} = \left(-\frac{d^2}{dx^2} + 1\right) \dotplus \sigma B_- \dot{-} C\,. \tag{II.75b}$$

Proof. The lemma follows from integration by parts and the fact that the free Green's function (II.66) satisfies the B.C. $(\partial G/\partial n) = G$: For it is sufficient to verify (II.75) as a form equation on the core $D\big(-(d^2/dx^2) + 1\big) = \operatorname{Ran} G_0$. Thus let $f, g \in \operatorname{Ran} G_0$. Then

This content downloaded from 100.33.74.107 on Sat, 28 Feb 2026 03:57:10 UTC
All use subject to https://about.jstor.org/terms

$$\begin{aligned}(g, A_\sigma f) &= q(g, f) + (\sigma + 1)b(g, f) \\ &= (g, -f'' + f) + g(a_2)f'(a_2) - g(a_1)f'(a_1) + (\sigma + 1)b(g, f) ,\end{aligned}$$

by integration by parts. But since $f \in \operatorname{Ran} G_0$, $(\partial f/\partial n) = f$, and (II.75a) follows. The proof of (II.75b) is identical. □

From the formal relation $d\mu_0(q) = \text{const.}\, e^{-1/2(q, A_0 q)} dq$, one expects that

$$\text{(II.76)} \qquad \frac{\int q(x)q(y)e^{-(1/2)t(q,q)}d\mu_0(q)}{\int e^{-(1/2)t(q,q)}d\mu_0(q)} = \left(\left(-\frac{d^2}{dx^2} + 1\right) + T\right)^{-1}(x, y) ,$$

whenever t is a "reasonable" quadratic form and T is the (possibly formal) operator associated with t. For the case at hand, where t is a finite rank form-bounded perturbation of the basic form (II.72), it is easy to verify (II.76) by explicit evaluation of the Gaussian integrals. Combining Lemma II.30 and this identity, we deduce

THEOREM II.31. *The Green's function G_σ corresponding to the* B.C. (II.67) *on* $[a_1, a_2]$ *is given by*

$$\text{(II.77)} \qquad G_\sigma(x, y) = \frac{\int q(x)q(y)e^{-(\sigma/2)(q(a_1)^2 + q(a_2)^2)}d\mu_0}{\int e^{-(\sigma/2)(q(a_1)^2 + q(a_2)^2)}d\mu_0} .$$

In particular, the Dirichlet Green's function G_D is obtained by letting $\sigma \to \infty$ in (II.77). *The periodic Green's function is given by*

$$\text{(II.78)} \quad G_P(x, y) = \lim_{\sigma\to\infty} \frac{\int q(x)q(y) \exp\left[-\frac{\sigma}{2}(q(a_1) - q(a_2))^2 + q(a_1)q(a_2)\right]d\mu_0}{\int \exp\left[-\frac{\sigma}{2}(q(a_1) - q(a_2))^2 + q(a_1)q(a_2)\right]d\mu_0} .$$

As a result of this theorem we have:

Method (iii). The one-dimensional Markov field theory with the various B.C. described above can be obtained from the theory with free B.C. by modifying the free measure with boundary terms as in (II.77), (II.78).

Remark. When the Green's functions are represented in the form (II.77) we can obtain pointwise positivity relations among them on the basis of the correlation inequalities of § V.2. In particular $G_\sigma(x, y)$ is a decreasing function of σ. This monotonicity is distinct from the monotonicity (positive-definiteness) of Fig. II.3 but the two are consistent in the case of positive test functions.

This content downloaded from 100.33.74.107 on Sat, 28 Feb 2026 03:57:10 UTC
All use subject to https://about.jstor.org/terms

II.6. *Dirichlet Boundary Conditions.* In this subsection we continue our analysis of Dirichlet B.C. First, we describe method (iv) for obtaining Dirichlet B.C. by the insertion of an appropriate "δ-function" on the boundary. Secondly, we discuss "half-Dirichlet" states which differ from full Dirichlet states in that the interaction is Wick-ordered relative to $d\mu_0$ and not $d\mu_0^D$. Thirdly, we define the Dirichlet Hamiltonian and consider its relation to the Euclidean Dirichlet theory.

Consider first the case $d = 1$. If we take the limit $\sigma \to \infty$ in (II.77) then formally we have

$$G_D(x, y) = \text{const.} \int q(x)q(y)\delta(q(a_1))\delta(q(a_2))du_0 , \tag{II.79}$$

where the constant can be explicitly evaluated as a finite function of $|a_2 - a_1|$. What (II.79) says is that the Dirichlet state can be obtained from the free theory by inserting δ-functions to set the boundary variables to zero.

A rigorous formulation of (II.79) can be based on the observation that the operator $e^{-\varepsilon H_0}$ smooths out $\delta(q:)$

Definition. For $\varepsilon > 0$, define

$$\psi_\varepsilon(q) = (1 - e^{-2\varepsilon})^{-1/2} \exp\left[-e^{-2\varepsilon}q^2/(1 - e^{-2\varepsilon})\right] . \tag{II.80}$$

Remark. On $L^2(\mathbf{R}, d\nu)$ where $d\nu(q) = \pi^{-1/2}e^{-q^2}dq$, the harmonic oscillator Hamiltonian H_0 is $(1/2)(-(d^2/dq^2) + 2q(d/dq))$, the *Hermite operator.* Formally $\psi_\varepsilon(q) = \pi^{1/2}(e^{-\varepsilon H_0}\delta)(q)$ so that (II.80) is just Mehler's formula [106].

LEMMA II.32. *Let* $\varepsilon > 0$.

(i) $\int \psi_\varepsilon(q)d\nu(q) = 1$.

(ii) $\|\psi_\varepsilon\|_\infty = (1 - e^{2\varepsilon})^{-1/2}$ *so that* $\psi_\varepsilon \in L^p(\mathbf{R}, d\nu)$ *for* $p \leqq \infty$.

(iii) *If* $\alpha > 0$, $e^{-\alpha H_0}\psi_\varepsilon = \psi_{\varepsilon+\alpha}$.

Proof. (i) and (ii) are elementary computations. That $\|\psi_\varepsilon\|_1 = 1$ is to be expected since $e^{-\varepsilon H_0}$ is L^1-norm preserving on positive functions. (iii) follows from the semigroup property for Mehler's formula. □

Remark. That $e^{-\varepsilon H_0}$ takes $\delta(q)$ into an L^∞ vector is a reflection of the fact that $e^{-\varepsilon H_0}$ fails to take L^1 into L^∞ because of bad behaviour at infinity but not at finite points.

We now consider the free Markov field for $d = 1$ with covariance (II.40a) and we let $d\mu_0^D$ be the measure for the theory with Dirichlet B.C. on $[a_1, a_2]$ as defined in (II.62). Let J_t be the isometric imbedding of $\mathcal{F} = L^2(\mathbf{R}, d\nu)$ into $L^2(Q, d\mu_0)$ given by $J_t\psi = \psi(q(t))$.

This content downloaded from 100.33.74.107 on Sat, 28 Feb 2026 03:57:10 UTC
All use subject to https://about.jstor.org/terms

THEOREM II.33. *Let u be a function measurable with respect to the variables $q(t)$ with $t \in [a_1 + \varepsilon, a_2 - \varepsilon]$ where $\varepsilon > 0$. Then the Dirichlet state can be obtained from the free state by*

$$\int u d\mu_0^D = \frac{\int (J_{a_1+\varepsilon}\psi_\varepsilon) u (J_{a_2-\varepsilon}\psi_\varepsilon) d\mu_0}{\langle \psi_\varepsilon, e^{-(a_2-a_1-2\varepsilon)H_0}\psi_\varepsilon\rangle_{\mathcal{F}}} . \tag{II.81}$$

Proof. Both sides of (II.81) represent expectations of u with respect to Gaussian processes with mean zero. Since such expectations are completely determined by the expectation of $q(s)q(t)$, it is sufficient to consider the case where $u = q(s)q(t)$ with $a_1 + \varepsilon \leqq t \leqq s \leqq a_2 - \varepsilon$; i.e., we need only prove that

$$\int q(s)q(t)d\mu_0^D = \frac{\langle \psi_\varepsilon, e^{-(a_2-\varepsilon-s)H_0} q e^{-(s-t)H_0} q e^{-(t-a_1-\varepsilon)H_0}\psi_\varepsilon\rangle}{\langle \psi_\varepsilon, e^{-(a_2-a_1-2\varepsilon)H_0}\psi_\varepsilon\rangle} , \tag{II.82}$$

where we have used Theorem II.4(ii) to rewrite the right side of (II.81). Denote the numerator and denominator of the right side of (II.82) by $N_\varepsilon(s, t)$ and D_ε. By Lemma II.32(iii), D_ε is independent of ε and $N_\varepsilon(s, t) = N_{\varepsilon'}(s, t)$ if $0 < \varepsilon' < \varepsilon$ with $s, t \in [a_1 - \varepsilon, a_2 + \varepsilon]$. Let $N(s, t)$ be the *symmetric* function defined for $s, t \in (a_1, a_2)$ by piecing together the $N_\varepsilon(s, t)$.

Clearly, (II.82) follows if we can show that for fixed t in (a_1, a_2),

$$N(s, t) \longrightarrow 0 \quad \text{as} \quad s \longrightarrow a_j ,$$

and that

$$\left(-\frac{\partial^2}{\partial s^2} + 1\right) N(s, t) = D\delta(s - t) . \tag{II.83}$$

Now, on the one hand, if $t \leqq s$,

$$|N(s, t)| \leqq \| q\psi_{a_2-s} \| \cdot \| q\psi_{t-a_1} \| \longrightarrow 0$$

as $s \to a_2$, and on the other hand, if $s \leqq t$,

$$|N(s, t)| \leqq \| q\psi_{a_2-t} \| \cdot \| q\psi_{s-a_1} \| \longrightarrow 0$$

as $s \to a_1$.

Next fix ε and $t \in [a_1 + \varepsilon, a_2 - \varepsilon]$. If we let $p = i[H_0, q] = (1/i)[(d/dq) - q]$ we see that $i[H_0, p] = -q$. Thus for $t < s$,

$$\frac{\partial}{\partial s} N(s, t) = \langle \psi_\varepsilon, e^{-(a_2-\varepsilon-s)H_0}\left(\frac{1}{i}p\right) e^{-(s-t)H_0} q e^{-(t-a_1-\varepsilon)H_0}\psi_\varepsilon\rangle , \tag{II.84}$$

and

$$\frac{\partial^2}{\partial s^2} N(s, t) = \langle \psi_\varepsilon, e^{-(a_2-\varepsilon-s)H_0} q e^{-(s-t)H_0} q e^{-(t-a_1-\varepsilon)H_0}\psi_\varepsilon\rangle .$$

This content downloaded from 100.33.74.107 on Sat, 28 Feb 2026 03:57:10 UTC
All use subject to https://about.jstor.org/terms

Thus for $s > t$, $N(s, t)$ is C^∞ in s and $-(\partial^2 N/\partial s^2) + N = 0$. A similar result holds for $s < t$. Moreover, by (II.84) and its $t > s$ analogue, we see that $(\partial N/\partial s)$ has a discontinuity at $s = t$ of magnitude

$$\left\langle \psi_\varepsilon, e^{-(a_2-\varepsilon-t)H_0}\left[\frac{1}{i}p, q\right]e^{-(t-a_1-\varepsilon)H_0}\psi_\varepsilon\right\rangle = -D\,.$$

This establishes (II.83) and the theorem. □

Remark. Since both sides of (II.82) can be explicitly computed, the left side as a Green's function and the right by Mehler's formula, (II.82) can also be proved by straightforward but tedious calculation.

For $d \geqq 2$ a similar analysis yielding explicit formulae is possible for rectangular regions. For general regions we have the following result (we give the proof for $\mathbf{R}^2$, but the same result holds for $\mathbf{R}^d$):

THEOREM II.34. *Let $\Lambda_1 \subset \Lambda$ be bounded open regions in $\mathbf{R}^2$ with* dist $(\Lambda_1, \partial\Lambda) > 0$. *Let Q_{Λ_1} be the Q-space associated to the fields in Λ_1. Let $d\mu_0^{(\Lambda_1)}$ be the restriction of the free measure to Q_{Λ_1}* (obtained by integrating out the coordinates orthogonal to Q_{Λ_1} as in § II.5) *and let $d\mu_{D,\Lambda}^{(\Lambda_1)}$ be the restriction to Q_{Λ_1} of the free measure with Dirichlet* B.C. *on $\partial\Lambda$. Then $d\mu_0^{(\Lambda_1)}$ and $d\mu_{D,\Lambda}^{(\Lambda_1)}$ are equivalent measures; explicitly,*

$$d\mu_{D,\Lambda}^{(\Lambda_1)} = F d\mu_0^{(\Lambda_1)}$$

where $F \in L^\infty(Q_{\Lambda_1}, d\mu_0^{(\Lambda_1)})$ and $F^{-1} \in L^p(Q_{\Lambda_1}, d\mu_{D,\Lambda}^{(\Lambda_1)})$ for some $p > 1$. Moreover, F is a Gaussian in the variables concentrated on $\partial\Lambda_1$.

The proof of the theorem is based on

LEMMA II.35. *Let Λ_1 be a bounded open region and Λ_2 an open* (or closed) *region disjoint from Λ_1 with* dist $(\Lambda_1, \Lambda_2) > 0$. *Define $\alpha = e_{\Lambda_1}e_{\Lambda_2}e_{\Lambda_1}$ on N. Then*

(i) *α is trace class;*

(ii) $\|\alpha\| < 1$.

Proof. (i) By Lemma III.5B, $e_{\Lambda_2}e_{\Lambda_1}$ is Hilbert-Schmidt so that α is trace class.

(ii) This proof was suggested by E. Stein (private communication). Let $\rho \in C^\infty(\mathbf{R}^2)$ with uniformly bounded derivatives so that $\rho \equiv 1$ on Λ_1 and $\rho \equiv -1$ on Λ_2. By the standard theory of Sobolev spaces (see e.g. [78]), multiplication by ρ is a bounded operator on N. We show that

$$\|\alpha\| \leqq (\|\rho\|^2 - 1)/(\|\rho\|^2 + 1) \tag{II.84}$$

from which the lemma clearly follows. Let $f_j \in \operatorname{Ran} e_{\Lambda_j}$ with $\|f_j\| = 1$ and $\langle f_1, f_2\rangle \geqq 0$. Then

This content downloaded from 100.33.74.107 on Sat, 28 Feb 2026 03:57:10 UTC
All use subject to https://about.jstor.org/terms

$$\|f_1 + f_2\|^2 = \|\rho(f_1 - f_2)\|^2 \leqq \|\rho\|^2 \|f_1 - f_2\|^2$$

and consequently

$$2\langle f_1, f_2\rangle(1 + \|\rho\|^2) \leqq 2(\|\rho\|^2 - 1)$$

from which (II.84) follows easily. □

Proof of Theorem II.34. Let $N_1 \subset N$ be the space of distributions with support in Λ_1 and let $\Lambda_2 = \mathbf{R}^2 \backslash \Lambda$. Then for f, $g \in N_1$, the measure $d\mu_0^{(\Lambda_1)}$ is determined by the covariance

$$\int \phi(f)\phi(g) d\mu_0^{(\Lambda_1)} = \langle f, g\rangle$$

while, by Corollary II.25, the measure $d\mu_{D,\Lambda}^{(\Lambda_1)}$ is determined by

$$\int \phi(f)\phi(g) d\mu_{D,\Lambda}^{(\Lambda_1)} = \langle f, (1 - e_{\Lambda_2})g\rangle = \langle f, S^2 g\rangle$$

where $S = (1 - e_{\Lambda_1} e_{\Lambda_2} e_{\Lambda_1})^{1/2}$. By the previous lemma, S is positive, invertible and $S^2 - 1$ is trace class.

The theorem now follows from Shale's theorem [96] on the unitary implementability of symplectic or Bogoliubov transformations (see also [22], [91], [3]). We give some details. Since $\alpha = 1 - S^2$ is compact, S has a complete set of orthogonal eigenvectors in N_1. Choose such a basis $\{f_i\}$ with $\langle f_i, f_j\rangle = (1/2)\delta_{ij}$, $Sf_i = \lambda_i f_i$. Note that

$$0 < (1 - \|\alpha\|)^{1/2} \leqq \lambda_i \leqq 1 , \tag{II.85a}$$

and

$$\sum |\lambda_i^2 - 1| < \infty \tag{II.85b}$$

by Lemma II.35. By (II.85), $\prod \lambda_i^2$ converges to a nonzero value, implying that $\prod \lambda_i^{-1} < \infty$. If we realize Q_{Λ_1} as an infinite product of copies of $\mathbf{R}$ where $\phi(f_i)$ is multiplication by q_i, then

$$d\mu_0^{(\Lambda_1)} = \prod \pi^{-1/2} e^{-q_i^2} dq_i$$

and

$$d\mu_{D,\Lambda}^{(\Lambda_1)} = \prod \pi^{-1/2} \lambda_i^{-1} e^{-q_i^2/\lambda_i^2} dq_i .$$

Thus F is given by

$$F = \prod \lambda_i^{-1} e^{-(\lambda_i^{-2} - 1) q_i^2} . \tag{II.86}$$

By an argument of Segal [91], this latter product is convergent in each $L^p(Q_{\Lambda_1}, d\mu_0^{(\Lambda_1)})$, and, since $\lambda_i \leqq 1$ and $\prod \lambda_i^{-1} < \infty$, $F \in L^\infty$. By a remark of Klein [54], $F^{-1} \in L^p(Q_{\Lambda_1}, d\mu_{D,\Lambda}^{(\Lambda_1)})$ for some $p > 1$.

Finally we note that in the product (II.86) the variables $q_i = \phi(f_i)$ that

This content downloaded from 100.33.74.107 on Sat, 28 Feb 2026 03:57:10 UTC
All use subject to https://about.jstor.org/terms

enter are concentrated on $\partial\Lambda_1$, i.e., $\operatorname{supp} f_i \subset \partial\Lambda_1$. For let λ_i be an eigenvalue of S not equal to 1. Then $f_i = (1-\lambda_i^2)^{-1}\alpha f_i$. But by the Markov property

$$e_{\partial\Lambda_1}\alpha = e_{\partial\Lambda_1}e_{\Lambda_2}e_{\Lambda_1} = e_{\Lambda_1}e_{\Lambda_2}e_{\Lambda_1} = \alpha$$

so that $e_{\partial\Lambda_1}f_i = f_i$. □

We wish next to distinguish between full-Dirichlet and half-Dirichlet states. To begin with, we emphasize that there exist two distinct useful realizations of the Gaussian random field with covariance equal to the Green's function $G_\Lambda^D(x, y)$ with Dirichlet B.C. on $\partial\Lambda$ (see (II.58b)):

1. From the conditioning point of view, $\phi^D(f)$ is realized as a random variable on the free field Q-space. In this way $\phi^D(f)$ and $\phi(f)$ are different random variables (in fact, $\phi^D(f) \equiv \phi((1-e_{\Lambda'})f)$; cf. Theorem II.28) but the underlying free measure $d\mu_0$ is the same. The interaction $U_\Lambda^D = \int_\Lambda :P(\phi^D(x)): d^2x$ (cf. (II.43)–(II.46)) is expressed in terms of ϕ^D with the Wick ordering defined with respect to the free measure. This is the "natural" Wick ordering for the Gaussian random field ϕ^D; for instance,

$$:\phi^D(x)^2: = \lim_{y\to x}\left[\phi^D(x)\phi^D(y) - \int \phi^D(x)\phi^D(y)d\mu_0\right].$$

2. In the second view one regards the field variables $\phi(f)$ as fixed functions on some measure space Q; now there are two different measures $d\mu_0$ and $d\mu_\Lambda^D$ such that

$$\int \phi(f)\phi(g)d\mu_0 = \int dxdy\, f(x)G_0(x-y)g(y)\ ,$$

and

$$\int \phi(f)\phi(g)d\mu_\Lambda^D = \int dxdy\ f(x)G_\Lambda^D(x, y)g(y)\ .$$

If we restrict ourselves to test functions with support in Λ', a compact subset of Λ, then Theorem II.34 tells us that such a picture is possible and that the realization of $\phi(f)$ as a measurable function is independent of the realization of Q-space. In this view, U_Λ and U_Λ^D are distinct functions of the fields $\phi(f)$; i.e., U_Λ (resp. U_Λ^D) is defined in terms of Wick ordering with respect to $d\mu_0$ (resp. $d\mu_\Lambda^D$). We denote Wick powers with respect to $d\mu_\Lambda^D$ by $:\phi(x)^r:_{D,\Lambda}$ or, if there is no confusion by $:\phi(x)^r:_D$, or, in an abuse of notation, by $:\phi^D(x)^r:$, as in (II.63). The *full* Dirichlet state for the $P(\phi)_2$ Markov field in region Λ is then given by the measure (II.64), i.e., $e^{-U_\Lambda^D}d\mu_\Lambda^D \Big/ \int e^{-U_\Lambda^D}d\mu_\Lambda^D$.

In this subsection we wish to consider the state associated with the measure

This content downloaded from 100.33.74.107 on Sat, 28 Feb 2026 03:57:10 UTC
All use subject to https://about.jstor.org/terms

$$e^{-U_\Lambda} d\mu_\Lambda^D \Big/ \int e^{-U_\Lambda} d\mu_\Lambda^D .$$

Since the Dirichlet B.C. are imposed on the "free field measure" but not "on the Wick ordering", we shall call this state the "half-Dirichlet" state (see also [69]). At first sight, half-Dirichlet states seem very unnatural. However, the choice of U_Λ instead of U_Λ^D ensures that the interaction in region $\Lambda' \subset \Lambda$ does not change as Λ changes. (This is perhaps clearest in the lattice approximation; cf. § IV.3.) In any event, the choice of B.C. should be regarded as a convenience. The half-Dirichlet states have convenient monotonicity properties (cf. § V.4) and are thus "natural" in this sense. Of course, ultimately, one must show that a choice of B.C. is just that—i.e., when $\Lambda \to \infty$, the resulting theory is "an infinite volume $P(\phi)_2$ theory". We turn to this question in §VII.1.

As a preliminary to proving that $e^{-U_\Lambda} \in L^p(Q, d\mu_\Lambda^D)$ in spite of the Wick ordering being "wrong", we study some positivity properties of Green's functions. We first note:

LEMMA II.36. *Suppose f is continuous on a closed set $\Lambda \subset \mathbf{R}^2$ and satisfies $(-\Delta + m^2)f = 0$ on Λ^{int}.*

(i) *If $f \geqq 0$ in Λ, then f takes its maximum on $\partial\Lambda$.*

(ii) *If $f \leqq 0$ in Λ, then f takes its minimum on $\partial\Lambda$.*

Proof. In case (i) (resp. case (ii)), $\Delta f \geqq 0$ (resp. $\leqq 0$) and so f is subharmonic (super harmonic). □

We call an open region Λ *normal* if for each $y \in \Lambda$, $G_\Lambda^D(x, y) \to 0$ as $x \to \partial\Lambda$. This is true for example, if Λ is the interior of a Jordan curve. For $x \neq y$, we define

$$\delta G_\Lambda(x, y) = G_0(x - y) - G_\Lambda^D(x, y) . \tag{II.87}$$

LEMMA II.37. *Let Λ be a normal region. Then:*

(i) $\delta G_\Lambda(x) = \lim_{y \to x} \delta G_\Lambda(x, y)$ *exists if* $x \in \Lambda$.

(ii) $G_\Lambda^D(x, y) \geqq 0$ *for all* $x \neq y$.

(iii) $\delta G_\Lambda(x, y) \geqq 0$ *for all* $x \neq y$.

(iv) *For all* $x \in \Lambda$, $0 \leqq \delta G_\Lambda(x) \leqq \sup_{y \in \partial\Lambda} G_0(x - y)$.

(v) *If $\Lambda' \supset \Lambda$ is also normal, then* $\delta G_{\Lambda'}(x) \leqq \delta G_\Lambda(x)$ *for* $x \in \Lambda$.

Proof. (i) Since for each $y \in \Lambda$, $(-\Delta_x + m^2)\delta G_\Lambda = 0$ in the sense of distributions, δG_Λ is continuous as $x \to y$ by the local regularity theorem [78] so that (i) holds.

(ii) Fix $y \in \Lambda$. By (i), $\lim_{x \to y} G_\Lambda^D = \lim_{x \to y} G_0 = +\infty$ so that $G_\Lambda^D(x, y)$ is positive for x near y. Let $R = \{x \in \Lambda \mid G_\Lambda^D(x, y) < 0\}$. Since $y \notin R$, R is an

This content downloaded from 100.33.74.107 on Sat, 28 Feb 2026 03:57:10 UTC
All use subject to https://about.jstor.org/terms

open proper subset of Λ and G_Λ^D satisfies the hypotheses of Lemma II.36(ii) in R; hence $G_\Lambda^D(x, y)$ takes its minimum in R when $x \in \partial\Lambda$. But $G_\Lambda^D(x, y) = 0$ for $x \in \partial R$ so that $R = \phi$.

(iii) Similarly, since $(-\Delta + m^2)\delta G_\Lambda = 0$ and $\delta G_\Lambda \geqq 0$ for $x \in \partial\Lambda$ we see by the previous lemma that (iii) holds.

(iv) Follows from the maximum principle.

(v) Note that $\delta G_{\Lambda'} - \delta G_\Lambda = -G_{\Lambda'}^D \leqq 0$ if $x \in \partial\Lambda$. □

In Lemma V.27 we shall derive an explicit formula relating Wick powers, when the ordering is defined relative to two different masses. This formula implies that

$$:\phi^n(x): = \sum_{j=0}^{[n/2]} \left\{ \begin{matrix} n \\ j \end{matrix} \right\} (-\delta G_\Lambda(x))^j :\phi^{n-2j}(x):_{D,\Lambda} \tag{II.88a}$$

where $\left\{ \begin{matrix} n \\ j \end{matrix} \right\} = n!/(n-2j)!j!2^j$. The coefficients in (II.88a) are singular as $x \to \partial\Lambda$, but by Lemma II.37(iv) and well-known properties of the modified Bessel function [23], we see that

$$|\delta G_\Lambda(x)| \leqq \text{const.} \, |\ln(\text{dist}(x, \partial\Lambda))| \tag{II.88b}$$

for x near $\partial\Lambda$. Thus the singularities are not serious, as the following generalization of Theorem II.10 shows:

THEOREM II.38. *Consider the polynomial in the fields*

$$U(\vec{g}) = \sum_{r=0}^{2n} \left(\int g_r(x) :\phi^r(x): d^2x \right) \omega_0$$

where each $g_r \in L^{1+\varepsilon}(\mathbf{R}^2)$ (or, more generally, $g_r \in \mathcal{H}_{1+\varepsilon}(\mathbf{R}^2)$).

(i) $U(\vec{g}) \in L^p(Q, d\mu_0)$ *for all* $p < \infty$.

(ii) *Assume in addition that* $g_{2n}(x) \geqq 0$, $g_{2n} \in L^1(\mathbf{R}^2)$, *and that* $g_r = g_{2n} \cdot h_r$ *where*

$$\int g_{2n}(x) \, |h_r(x)|^{2n/(2n-r)} d^2x < \infty \, . \tag{II.89}$$

Then $e^{-U(\vec{g})} \in L^p(Q, d\mu_0)$ *for all* $p < \infty$.

(iii) *Let* $\{\vec{g}^{(m)}\}$ *be a sequence satisfying the above conditions such that for each* $r = 0, 1, \cdots, 2n$, $g_r^{(m)} \to g_r$ *in* $L^{1+\varepsilon}$, *and*

$$\sup_m \int g_{2n}^{(m)} \, |h_r^{(m)}|^{2n/(2n-r)} d^2x < \infty$$

where $h_r^{(m)} = g_r^{(m)}/g_{2n}^{(m)}$. *Then* $e^{-U(\vec{g}^{(m)})} \to e^{-U(\vec{g})}$ *in each* $L^p(Q, d\mu_0)$, *where* $p < \infty$.

(iv) *Results* (i)–(iii) *above remain valid for the Dirichlet theory on a*

This content downloaded from 100.33.74.107 on Sat, 28 Feb 2026 03:57:10 UTC
All use subject to https://about.jstor.org/terms

normal open region $\Lambda \subset \mathbf{R}^2$ *where* du_0 *is replaced by* $d\mu_\Lambda^D$ *and* $:\phi^r(x):$ *by the Dirichlet Wick powers* $:\phi^r(x):_{D,\Lambda}$, *and where we require* $\operatorname{supp} g_r \subset \bar{\Lambda}$.

Proof. (i) As in the proof of Theorem II.10(i), $U(\bar{g}) \in L^p$ if and only if the norms $\left| \int g_r(x) G_0(x-y)^r g_r(y) dx dy \right|$ are finite. The condition $g_r \in L^{1+\epsilon}(\mathbf{R}^2)$ suffices for this [43].

(ii) In the standard proof that $e^{-U(g)} \in L^p$ [32], a key ingredient is a lower bound on the ultraviolet-cutoff polynomial

$$U_\chi(g) \geqq -c \, \| \chi \|_N^{2n} \tag{II.90}$$

where the constant c depends on g but not on χ. The condition (II.89) guarantees the same estimate in this case. For the polynomial $U_\chi(x) = \sum_{r=0}^{2n} h_r(x) :\phi_\chi^r(x):$ can be rewritten in terms of ordinary powers, $U_\chi(x) = \sum_{s=0}^{2n} b_s(\vec{h}(x), \chi)\phi_\chi^s(x)$, where the coefficient b_s depends linearly on the $h_r(x)$ and is a polynomial of degree $[(2n-s)/2]$ in the Wick constant $\| \chi \|_N^2$. The elementary estimate for polynomials

$$X^{2n} + \sum_{s=0}^{2n-1} b_s X^s \geqq \text{const.} \max_s | b_s |^{2n/(2n-s)} ,$$

and (II.89) then yield the desired estimate of the form (II.90).

(iii) The proof uses the inequality (II.24).

(iv) The proof in the Dirichlet case is really a corollary of that for free B.C. For the norms on g which arise, viz., $\int | g_r(x) | G_\Lambda^D(x, y)^r | g_r(y) | dx dy$, are obviously bounded since $G_\Lambda^D \leqq G_0$ on $L^2(\Lambda)$.

We shall call a region Λ *log-normal* if it is normal and bounded, and if for any positive integer n,

$$\int_\Lambda | \ln (\operatorname{dist}(x, \partial\Lambda)) |^n d^2x < \infty .$$

Clearly any reasonable region is log-normal.

COROLLARY II.39. *Let* Λ *be a log-normal region and let* $U_\Lambda = \left(\int_\Lambda :P(\phi(x)): d^2x\right)\omega_0$ *where* P *is a semibounded polynomial. Then*

(i) $U_\Lambda \in L^p(Q, d\mu_\Lambda^D)$ *for all* $p < \infty$.

(ii) $e^{-U_\Lambda} \in L^p(Q, d\mu_\Lambda^D)$ *for all* $p < \infty$.

Proof. Immediate from (II.88) and Theorem II.38. □

We have thus justified for log-normal Λ:

Definitions. The *half-Dirichlet* $P(\phi)_2$ *Markov field theory in region* Λ is the theory with measure

This content downloaded from 100.33.74.107 on Sat, 28 Feb 2026 03:57:10 UTC
All use subject to https://about.jstor.org/terms

(II.91a) $$d\nu_\Lambda^{HD} = \frac{e^{-U_\Lambda} d\mu_\Lambda^D}{e^{-U_\Lambda} d\mu_\Lambda^D} .$$

The half-Dirichlet Schwinger functions are defined by

(II.91b) $$S_\Lambda^{HD}(x_1, \cdots, x_n) = \int \phi(x_1) \cdots \phi(x_n) d\nu_\Lambda^{HD}$$

for $x_1, \cdots, x_n \in \Lambda$.

In § VII.1 we shall need one more relation involving free and Dirichlet Wick ordering:

THEOREM II.40. *Let P be semibounded. If $\Lambda \subset \Lambda'$ where Λ is open and Λ' normal, define $U_\Lambda^{D,\Lambda'} = \int_\Lambda :P(\phi(x)):_{D,\Lambda'} d^2x$. Then as $\Lambda' \to \infty$, in the sense that* dist $(\Lambda, \partial\Lambda') \to \infty$, *we have $e^{-U_\Lambda^{D,\Lambda'}} \to e^{-U_\Lambda}$ in each $L^p(Q, d\mu_0)$, $p < \infty$.*

Proof. The convergence follows from Theorem II.38(iii). For by the inverse of (II.88a), $U_\Lambda^{D,\Lambda'} - U_\Lambda$ can be written as a sum of terms of the form $\int_\Lambda (\delta G_{\Lambda'}(x))^j :\phi^k(x): dx$ for suitable j, k. By Lemma II.37(iv), $\delta G_{\Lambda'}(x) \to 0$ exponentially as $\Lambda' \to \infty$, and the result follows. □

We conclude this section with a brief discussion of the $P(\phi)_2$ Dirichlet Hamiltonian. As always the polynomial P is semibounded. The underlying Hilbert space is $\mathcal{F}^D = \Gamma(l^2(0, \infty))$, the Fock space built over $l^2(0, \infty)$ (see § II.1). The ith creation operator $a^*(i)$ acts by tensoring in the ith basis vector e_i of l^2, i.e., if $\psi \in \mathcal{F}_n^D$, then $a^*(i)\psi = (n+1)^{1/2} e_i \otimes_s \psi$. Let $q_0, q_1, \cdots$ denote the q variables, i.e.,

$$q_n = 2^{-1/2}(a^*(n) + a(n)) .$$

For $x \in (-l/2, l/2)$, define the time-zero relativistic Dirichlet field

(II.92) $$\phi_l^D(x) = (2l)^{-1/2} \textstyle\sum_{n=0}^\infty f_n^{(l)}(x) q_n ,$$

where $f_n^{(l)}(x) = \mu(k_n)^{-1/2} \sin k_n x$ for n odd and $f_n^{(l)}(x) = \mu(k_n)^{-1/2} \cos k_n x$ for n even; here $k_n = \pi(n+1)/l$ and $\mu(k) = (k^2 + m^2)^{1/2}$.

Let $h_{0,l}^D$ be the diagonal operator on l^2 with eigenvalues $\mu(k_n)$, $n = 0, 1, \cdots$. The free Hamiltonian $H_{0,l}^D = d\Gamma(h_{0,l}^D)$ with vacuum Ω_0. We define the interacting Dirichlet Hamiltonian by

(II.93) $$H_l^D = H_{0,l}^D + H_{I,l}^D = H_{0,l}^D + \int_{-l/2}^{l/2} :P(\phi_l^D(x)): dx .$$

The corresponding Euclidean theory is the Dirichlet theory on the strip $\Lambda_l = [-l/2, l/2] \times \mathbf{R}$. Let $d\mu_l^D$ denote the corresponding Dirichlet measure. We first observe:

LEMMA II.41. *If $x, y \in [-l/2, l/2]$, then*

This content downloaded from 100.33.74.107 on Sat, 28 Feb 2026 03:57:10 UTC
All use subject to https://about.jstor.org/terms

$$(\Omega_0, \phi_l^D(x)e^{-|t-s|H_{0,l}^D}\phi_l^D(y)\Omega_0) = \int \phi(x, t)\phi(y, s)du_l^D \,. \tag{II.94}$$

Proof. We need only show that the left-hand side of (II.94) is the Dirichlet Green's function for $-\Delta + m^2$ in the strip Λ_l. But by the expansion (II.92) and the relation $(\Omega_0, q_j q_k \Omega_0) = (1/2)\delta_{jk}$, the left side is

$$\frac{1}{4l}\sum_{n=0}^{\infty} f_n^{(l)}(x) f_n^{(l)}(y) e^{-|t-s|\mu(k_n)} \,.$$

It is a standard calculation to check that this is the Green's function $G_{\Lambda_l}^D$. □

As in the case of free B.C. we can write a Feyman-Kac-Nelson formula relating the relativistic and Euclidean theories. We let J_t^D be the imbedding of $\mathcal{F}^D$ as the "time" t subspace of $L^2(Q, d\mu_l^D)$.

THEOREM II.42 (Dirichlet FKN Formula). *For $u, v \in \mathcal{F}^D$ and $t > 0$,*

$$(u, e^{-tH_l^D}v) = \int \overline{(J_t u)} \exp\left(-\int_0^t ds \int_{-l/2}^{l/2} dx :P(\phi^D(x, s)):\right) J_0 v d\mu_l^D \,.$$

We close with the warning that the states employed by Glimm-Spencer [35]* to decouple regions are neither Dirichlet nor half-Dirichlet states. Given a region Λ, they consider the Gaussian process with covariance

$$\begin{aligned} \langle\phi(x)\phi(y)\rangle_{GS} &= G_0(x-y) && \text{if } x, y \in \Lambda \text{ or } x, y \in \Lambda' \\ &= 0 && \text{if } x \in \Lambda, y \in \Lambda' \text{ or } x \in \Lambda', y \in \Lambda \end{aligned}$$

where $\Lambda' = \mathbf{R}^2/\Lambda$. In particular $: :_{GS}$ is the same as ordinary Wick ordering when applied to purely local objects like $P(\phi(x))$. The GS B.C. is more closely related to free B.C. than Dirichlet B.C. In fact, if A is Σ_Λ-measurable and $\Lambda \subset \tilde{\Lambda}$, then

$$\frac{\langle Ae^{-U_{\tilde{\Lambda}}}\rangle_{GS}}{\langle e^{-U_{\tilde{\Lambda}}}\rangle_{GS}} = \frac{\langle Ae^{-U_\Lambda}\rangle_0}{\langle e^{-U_\Lambda}\rangle_0} \,.$$

III. L^p-Estimates

In contrast to the situation in classical statistical mechanics, the free Markov measure is not a product measure with respect to the decomposition of space into disjoint regions; i.e., random variables associated with disjoint regions are not independent. This is clear from the basic covariance relation

$$\int \phi(f)\phi(g)d\mu_0 = \int f(x)S(x-y)g(y)dx\,dy$$

where S is defined in (II.7). Since S is strictly positive and $\int \phi(f)d\mu_0 = 0$, no two $\phi(f)$, $\phi(g)$ are independent if $f, g \geqq 0$. Nevertheless since $S(x)$ goes

* However, in [122] half Divichlet states *are* used.

This content downloaded from 100.33.74.107 on Sat, 28 Feb 2026 03:57:10 UTC
All use subject to https://about.jstor.org/terms

exponentially to zero as $|x| \to \infty$, distant regions are "nearly independent". Our basic goal in this section is to express this idea in terms of estimates which enable us to deal with the complications caused by non-independence.

In their study of the infinite volume limit [31], Glimm and Jaffe relied critically on the exponential decoupling of distant regions, a fact they made precise in various ways. In §III.1 we shall see that this exponential decoupling has an elegant formulation in the commutative world of Euclidean fields. The idea is simple to describe: If u and v are independent random variables (=measurable functions), then $\|uv\|_1 = \|u\|_1 \|v\|_1$; for general random variables one can do no better than $\|uv\|_1 \leqq \|u\|_2 \|v\|_2$. Distant regions are decoupled in the sense that, if u is Σ_{Λ_1}-measurable and v is Σ_{Λ_2}-measurable, then $\|uv\|_1 \leqq \|u\|_p \|v\|_q$ where p and q may be taken exponentially close to 1 as dist (Λ_1, Λ_2) goes to infinity. One consequence of this decoupling is that the projection onto a distant region is asymptotically constant; i.e. if $u \geqq 0$ is Σ_{Λ_1}-measurable and Λ_2 is a region disjoint from Λ_1, then the conditional expectation $E_{\Lambda_2}u$ is nearly constant in the sense that $\|E_{\Lambda_2}u\|_2/\|E_{\Lambda_2}u\|_1$ approaches 1 exponentially as dist (Λ_1, Λ_2) goes to infinity.

Our proofs of these estimates rely on the basic hypercontractivity of second-quantized operators which has already played such an important role in constructive quantum field theory. For this reason we consider the above properties of the measure $d\mu_0$ to comprise its "hypercontractive nature". We state here Nelson's best possible hypercontractive estimate as we shall use it:

THEOREM III.1 (Nelson [68]). *Let $\mathcal{H}$ and $\mathcal{K}$ be real Hilbert spaces and let A be a contraction from $\mathcal{H}$ to $\mathcal{K}$. Let $1 \leqq p \leqq q \leqq \infty$. Then a necessary and sufficient condition for $\Gamma(A)$ to be a contraction from $L^p(Q_{\mathcal{H}})$ to $L^q(Q_{\mathcal{K}})$ is that*

$$\|A\|^2 \leqq (p-1)/(q-1) . \tag{III.1}$$

(Although Nelson proves the necessity of (III.1) only when $A = cI$, the proof for general A is similar. For instance if (III.1) is not satisfied, one can explicitly compute that $\|\Gamma(A)e^{\alpha\phi(f)}\Omega_0\|_q/\|e^{\alpha\phi(f)}\Omega_0\|_p$ is unbounded for large α and f with $\|Af\|/\|f\| \approx \|A\|$, where such an f is guaranteed by the spectral theorem if A is self-adjoint. If A is not self-adjoint we obtain the same conclusion from the identity $\Gamma(A^*A) = \Gamma(A^*)\Gamma(A)$. It is worth pointing out that $\Gamma(A)$ either is a contraction or is unbounded.)

In § III.2 we describe a technique for dealing with products of functions associated with nearby disjoint regions ("sandwich" and "checkerboard" lemmas). Finally in § III.3 we discuss the connection between the

This content downloaded from 100.33.74.107 on Sat, 28 Feb 2026 03:57:10 UTC
All use subject to https://about.jstor.org/terms

hypercontractive estimates of § III.1 and the mass gap for the free field. Since we discuss the hypercontractivity of the *free* measure, we temporarily suspend our proviso that space-time is two-dimensional and we let d denote the number of space-time dimensions.

The L^p-estimates of this section are fundamental to many of the results of this paper. We have already used hypercontractivity in establishing the Feynman-Kac-Nelson formula of § II. The estimates of § III.2 help us to control the thermodynamic limit in § VI. As we conjectured in the Introduction, we believe that local L^p-estimates ought to lead to local L^p-convergence of the cutoff measures (II.25) (see Theorem II.17, Remark 2); however our techniques are not developed to the point of displaying the cancellations between numerator and denominator which must occur.

III.1 *Hypercontractive Estimates.* Consider the semigroup e^{-tH_0}, $t \geqq 0$, generated by the free Hamiltonian H_0 with mass $m > 0$. According to Theorem III.1 and Proposition II.1(iii), $e^{-tH_0} = \Gamma(j_t^* j_0)$ is a contraction from $L^p(Q_F)$ to $L^q(Q_F)$ provided $\| e^{-t\mu} \|^2 \leqq (p-1)/(q-1)$, i.e., if $e^{-2mt} \leqq (p-1)/(q-1)$. This is the familiar hypercontractivity of e^{-tH_0} stated in the sharpest possible form. Similarly, $E_t E_0 = \Gamma(j_t j_t^* j_0 j_0^*)$ is a contraction from $L^p(Q_N)$ to $L^q(Q_N)$ if (III.1) is satisfied. Now suppose that $t > 0$ and that $\Lambda_1 \subset \{(x_1, \cdots, x_d) \mid x_d \geqq t\}$ and $\Lambda_2 \subset \{x_d \leqq 0\}$. By Theorem II.4(v)

$$E_{\Lambda_1} E_{\Lambda_2} = E_{\Lambda_1}(E_t E_0) E_{\Lambda_2} ,$$

so that by Euclidean covariance we have:

PROPOSITION III.2. *Let Λ_1 and Λ_2 be regions in $\mathbf{R}^d$ separated by parallel hyperplanes a distance r apart* (as in Fig. III.1). *If u_j is Σ_{Λ_j}-measurable, then*

$$\| u_1 u_2 \|_1 \leqq \| u_1 \|_{p_1} \| u_2 \|_{p_2} \tag{III.2}$$

provided

$$(p_1 - 1)(p_2 - 1) \geqq e^{-2mr} . \tag{III.3}$$

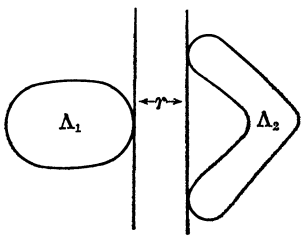

FIGURE III.1

This content downloaded from 100.33.74.107 on Sat, 28 Feb 2026 03:57:10 UTC
All use subject to https://about.jstor.org/terms

Remarks 1. The proposition is an improvement on Hölder's inequality which requires $(p_1 - 1)(p_2 - 1) \geqq 1$.

2. As discussed above, the inequality (III.2) with p_1 and p_2 close to 1 is an expression of the "near"-independence of random variables in the two regions. Thus we speak of the "exponential decoupling" of distant regions.

We wish to strengthen Proposition III.2 so that the right side of (III.3) decreases exponentially with the actual distance between the regions. We shall prove:

THEOREM III.3. *Let* Λ_1 *and* Λ_2 *be regions in* $\mathbf{R}^d$ *with* $\operatorname{dist}(\Lambda_1, \Lambda_2) = r \geqq 1$. *There is a function* $e(r) = 0(r^{d-1}e^{2mr})$ *such that, if* u_j *is* Σ_{Λ_j}-*measurable, then* (III.2) *holds provided*

$$(p_1 - 1)(p_2 - 1) \geqq e(r) \,. \tag{III.4}$$

Remarks. 1. Equivalently, we can formulate the theorem by stating that the product of projections $E_{\Lambda_2}E_{\Lambda_1}$ is a contraction from L^{p_1} to $L^{p_2'}$.

2. Since the usual L^p inequalities (Minkowski, Hölder) and the basic hypercontractivity theorem remain valid for conditional expectations, this estimate and the others of this section hold in terms of conditional expectations. Thus, given a σ-algebra Σ_A generated by a subspace A of N, we have, under the hypotheses of the theorem,

$$E[|u_1||u_2| \mid \Sigma_A] \leqq E[|u_1|^{p_1} \mid \Sigma_A]^{1/p_1} E[|u_2|^{p_2} \mid \Sigma_A]^{1/p_2}$$

almost everywhere.

3. We have restricted ourselves to the case of large separation between the regions because it is for this case that we use the theorem (see § VI). However by techniques of E. Stein (private communication) it is possible to prove the theorem for small r with

$$e(r) \leqq 1 - \text{const.}\, r$$

as $r \to 0$ (see the proof of Lemma II.35).

4. The r-dependence of the decrease function $e(r)$ is undoubtedly not the best possible. For instance, the factor r^{d-1} can probably be eliminated. On the basis of Proposition III.2 it is tempting to conjecture that $e(r) = e^{-2mr}$ is possible. This is true for convex regions but false for general regions as the following example (generalizing a suggestion of Nelson's) shows:

Example. Let $\Lambda_1 \subset \mathbf{R}^2$ consist of the n lines $x_2 = 0$, $x_2 = 2r$, $\cdots$, $x_n =$

This content downloaded from 100.33.74.107 on Sat, 28 Feb 2026 03:57:10 UTC
All use subject to https://about.jstor.org/terms

$2(n-1)r$, and let Λ_2 consist of the n lines $x_1 = r, \cdots, x_n = (2n-1)r$. In terms of the function $f \in F$ to be determined below, we define $u_1 = \sum_{i=0}^{n-1} f_{2i}$ and $u_2 = \sum_{i=1}^{n} f_{2i-1}$ where f_i is shorthand for the translate $j_{ir}f$ of $j_0 f$. Clearly $u_i \in N$ is Σ_{Λ_i}-measurable for $i = 1, 2$. A simple calculation based on Proposition II.1(iii) yields

$$\langle u_1, u_2\rangle_N = \sum_{i=0}^{n-1} (2n-2i-1)\langle f, e^{-(2i+1)r\mu} f\rangle_F$$

and

$$\begin{aligned}\langle u_1, u_1\rangle_N &= \langle u_2, u_2\rangle_N \\ &= n\langle f, f\rangle_F + 2\sum_{i=1}^{n-1} (n-i)\langle f, e^{-2ir\mu} f\rangle_F .\end{aligned}$$

We choose f to be concentrated near the maximum of the self-adjoint operator $e^{-\mu}$, with $\langle f, f\rangle = 1$ so that $\langle f, e^{-a\mu} f\rangle \cong e^{-am}$. Then $\langle u_1, u_2\rangle \gtrsim (2n-1)e^{-rm}$ and $\langle u_1, u_1\rangle = \langle u_2, u_2\rangle \cong n + 0(e^{-2rm})$. Consequently for large n and r we have

$$\langle u_1, u_2\rangle / \| u_1 \| \cdot \| u_2 \| \cong 2e^{-mr}$$

and we conclude that $\| e_{\Lambda_1} e_{\Lambda_2} \| \geqq 2e^{-mr}$. Since the one-particle condition (III.1) is necessary for hypercontractivity we see that for general regions we cannot hope to do better than $e(r) = 4e^{-2mr}$ in Theorem III.3. However, as we point out before Lemma III.5B, we *can* take $e(r) = \text{const.}\ e^{-2mr}$ if one of the regions is bounded, where the constant depends linearly on the volume of the bounded region.

5. For regions of special shape one can often do better than e^{-2mr} at infinity. For example, if Λ_1 and Λ_2 are concentric spheres of radius r_1, r_2, one can compute $\| e_{\Lambda_1} e_{\Lambda_2} \|$ explicitly in terms of Bessel functions: for $d = 2$ and r_1 fixed, one finds $0((\log r_2)^{-1} e^{-mr_2})$ behaviour as $r_2 \to \infty$.

6. If $m = 0$ there is no hypercontractivity between planar regions. But if $d > 2$ there can be hypercontractivity for some regions; e.g., if $d = 3$ and Λ_1, Λ_2 are concentric spheres of radius r_1, r_2, then $\| e_{\Lambda_1} e_{\Lambda_2} \| = \min(r_1, r_2)/\max(r_1, r_2)$.

As in the case of Proposition III.2, Theorem III.3 follows from Theorem III.1 and the following single particle result:

LEMMA III.4. *Suppose $f_1(x)$ and $f_2(x)$ in N_d have support in regions Λ_1 and Λ_2 separated by a distance r. If $r \geqq 1$ there is a constant c independent of r, Λ_1 and Λ_2 such that*

$$|\langle f_1, f_2\rangle| \leqq c r^{(d-1)/2} e^{-mr} \|f_1\| \cdot \|f_2\| . \tag{III.5}$$

Remarks. 1. Estimates like (III.5) have been established for $d = 1$ by Simon [99] and Osterwalder-Schrader [72].

This content downloaded from 100.33.74.107 on Sat, 28 Feb 2026 03:57:10 UTC
All use subject to https://about.jstor.org/terms

2. On the basis of the above example we expect that (III.5) holds with the replacement of $cr^{(d-1)/2}$ by 2.

3. For small r, $(|\langle f_1, f_2\rangle|)/(\|f_1\|\cdot\|f_2\|) \leqq 1 - \text{const.}\, r$.

Proof. Let $\Lambda^{(a)} = \{x \mid \operatorname{dist}(x, \Lambda) \leqq a\}$. For $j = 1, 2$, choose $\zeta_j \in C^\infty(\mathbf{R}^d)$ to satisfy $\zeta_j = 1$ on Λ_j, $\operatorname{supp} \zeta_j \subset \Lambda_j^{(1/3)}$, and $\|D^\alpha \zeta_j\|_\infty$ bounded independently of Λ_1, Λ_2 where D^α is any derivative of order α. For instance, take $\zeta_j = \zeta * \eta_j$ where $\zeta \in C_0^\infty$ is nonnegative with $\int \zeta = 1$ and $\operatorname{supp} \zeta \subset \{x \mid |x| < 1/9\}$, and where η_j is continuous with $\eta_j = 1$ on $\Lambda_j^{(1/9)}$, $\eta_j = 0$ off $\Lambda_j^{(2/9)}$, and $\|\eta_j\|_\infty \leqq 1$. We regard ζ_j as a multiplication operator. Defining $g_j = \mu^{-1} f_j$, we have $\mu^{-1}\zeta_j \mu g_j = g_j$ so that

$$\frac{\langle f_1, f_2\rangle}{\|f_1\|\cdot\|f_2\|} = \frac{(g_1, Ag_2)}{\|g_1\|_{L^2}\cdot\|g_2\|_{L^2}}$$

where $A = \mu\zeta_1\mu^{-2}\zeta_2\mu$, and the inner product and norms on the left are in N (see II.6) and those on the right are the ordinary Lebesgue ones. Therefore to prove the lemma it is sufficient to estimate the operator norm of A on $L(\mathbf{R}^d)$ by

$$\|A\| \leqq cr^{(d-1)/2} e^{-mr}\,. \tag{III.6}$$

Now the commutator

$$\begin{aligned}[\zeta, \mu^{-2}] &= \mu^{-2}[\mu^2, \zeta]\mu^{-2} = \mu^{-2}\big(-(\Delta\zeta) - 2(\nabla\zeta)\cdot\nabla\big)\mu^{-2} \\ &= \mu^{-2}\big((\Delta\zeta) - 2\nabla\cdot(\nabla\zeta)\big)\mu^{-2}\end{aligned}$$

where $(\Delta\zeta)$, $(\nabla\zeta)$ represent multiplication by $\Delta\zeta$ and $\nabla\zeta$; hence

$$\begin{aligned}A &= \mu[\zeta_1, \mu^{-2}]\zeta_2\mu = \mu^{-1}\big((\Delta\zeta_1) - 2\nabla\cdot(\nabla\zeta_1)\big)[\mu^{-2}, \zeta_2]\mu \\ &= \mu^{-1}\big((\Delta\zeta_1) - 2\nabla\cdot(\nabla\zeta_1)\big)\mu^{-2}\big((\Delta\zeta_2) + 2(\nabla\zeta_2)\cdot\nabla\big)\mu^{-1}\,.\end{aligned}$$

Since $\mu^{-1}\nabla$ is a bounded operator and the supports of ζ_1 and ζ_2 are separated by a distance $d - 1/3$, the estimate (III.6) is a consequence of the following lemma.

LEMMA III.5A. *Suppose η_1 and η_2 in $L^\infty(\mathbf{R}^d)$ have supports separated by a distance $r \geqq 1$. Then there is a constant a independent of r such that*

$$\|\eta_1\mu^{-2}\eta_2\| \leqq a\,\|\eta_1\|_\infty\cdot\|\eta_2\|_\infty r^{(d-1)/2} e^{-mr}$$

where $\|\cdot\|$ is the operator norm on L^2.

Proof. An operator A with kernel $a(x, y)$ can be estimated by

$$\|A\| \leqq \left[\sup_x \int |a(x, y)|\,dy \sup_y \int |a(x, y)|\,dx\right]^{1/2} \tag{III.7}$$

since by Schwarz' inequality

This content downloaded from 100.33.74.107 on Sat, 28 Feb 2026 03:57:10 UTC
All use subject to https://about.jstor.org/terms

$$|Af(x)|^2 \leqq \int |a(x, y)|\, dy \int |a(x, y)|\, |f(y)|^2\, dy\ .$$

Now in configuration space μ^{-2} is given by convolution with the kernel $k(x) = (2\pi)^{-d/2}(m/|x|)^{(d/2)-1}K^{(d/2)-1}(m\,|x|)$ where K_ν is the modified Bessel function [23, p. 288]. It follows that for $|x| \geqq 1$ there is a constant b such that

$$|k(x)| \leqq b\,|x|^{-(d-1)/2}e^{-m|x|}\ .$$

Thus the kernel of $\eta_1\mu^{-2}\eta_2$, $a(x, y) = \eta_1(x)k(x-y)\eta_2(y)$, can be dominated by

$$|a(x, y)| \leqq b\,\|\eta_1\|_\infty\,\|\eta_2\|_\infty\,|x-y|^{-(d-1)/2}e^{-m|x-y|}\ .$$

Therefore

$$\begin{aligned}\int |a(x, y)|\, dy &\leqq \text{const.}\ \|\eta_1\|_\infty\,\|\eta_2\|_\infty \int_{|y|\geqq r} |y|^{-(d-1)/2}e^{-m|y|}dy \\ &= \text{const.}\ \|\eta_1\|_\infty\,\|\eta_2\|_\infty \int_r^\infty t^{(d-1)/2}e^{-mt}dt \\ &\leqq \text{const.}\ \|\eta_1\|_\infty\,\|\eta_2\|_\infty r^{(d-1)/2}e^{-mr}\ ,\end{aligned}$$

and similarly for $\int |a(x, y)|\, dx$. The lemma now follows from (III.7). □

This completes the proof of Theorem III.3. In the case where one of the regions, say Λ_1, is bounded, we can similarly estimate the Hilbert-Schmidt norm,

$$\|\eta_1\mu^{-2}\eta_2\|_{HS} \leqq \text{const.}\ \|\eta_1\|_2\,\|\eta_2\|_\infty e^{-mr}\ .$$

In particular, we can choose $e(r) = \text{const.}\ e^{-2mr}$; we also obtain:

LEMMA III.5B. *Let Λ_1, $\Lambda_2 \subset \mathbf{R}^d$ have separation distance $r \geqq 1$ and suppose that Λ_1 is bounded. Then there is a constant c independent of Λ_1, Λ_2, r such that*

$$\|e_{\Lambda_1}e_{\Lambda_2}\|_{HS} \leqq c(1 + |\Lambda_1|^{1/2})e^{-mr}\ .$$

The single-particle estimate of Lemma III.4, $\|e_{\Lambda_1}e_{\Lambda_2}\|^2 \leqq e(r)$, where $r = \text{dist}\,(\Lambda_1, \Lambda_2) \geqq 1$, clearly implies that

$$\|E_{\Lambda_1}E_{\Lambda_2}v\|_2^2 \leqq e(r)\,\|v\|_2^2 \tag{III.8}$$

provided that $(\omega_0, v) = \int v d\mu_0 = 0$. This observation leads to the asymptotic constancy of the projection onto a distant region:

THEOREM III.6. *Let Λ_1 and Λ_2 be two regions in $\mathbf{R}^d$ with $r = \text{dist}\,(\Lambda_1, \Lambda_2) \geqq 1$, and let $u \geqq 0$ be Σ_{Λ_1}-measurable. Then*

$$\frac{\|E_{\Lambda_2}u\|_2^2}{\|E_{\Lambda_2}u\|_1^2} \leqq 1 + e(r)\left[\frac{\|u\|_2^2}{\|u\|_1^2} - 1\right].$$

This content downloaded from 100.33.74.107 on Sat, 28 Feb 2026 03:57:10 UTC
All use subject to https://about.jstor.org/terms

Remark. If u were constant then of course we would have $\|u\|_2/\|u\|_1 = \|E_\Lambda u\|_2/\|E_\Lambda u\|_1 = 1$. Thus the theorem expresses the fact that the projection of u onto a distant region is almost constant, with the approach to a constant being exponential.

Proof. We write $u = \|u\|_1 + v$ where $v \perp \omega_0$ since $u \geqq 0$. Since $\|E_{\Lambda_2} u\|_1 = (\omega_0, E_{\Lambda_2} u) = (\omega_0, u) = \|u\|_1$,

$$\begin{aligned}\|E_{\Lambda_2} u\|_2^2 &= \|u\|_1^2 + \|E_{\Lambda_2} v\|_2^2 \leqq \|u\|_1^2 + e(r)\|v\|_2^2 \\ &= \|u\|_1^2 + e(r)[\|u\|_2^2 - \|u\|_1^2]\end{aligned}$$

by (III.8). Dividing by $\|u\|_1^2$ yields the theorem. □

III.2 *Sandwich and Checkerboard Estimates.* As we saw in the previous section the product $E_{\Lambda_1} E_{\Lambda_2}$ is increasingly hypercontractive as dist (Λ_1, Λ_2) increases. We next extend this result to:

THEOREM III.7 ("Sandwich Estimate"). *Consider four parallel hyperplanes π_1, σ_1, σ_2, π_2 in $\mathbf{R}^d$ at distances a, l, a, and denote the region between σ_1 and σ_2 by Λ. If u is Σ_Λ-measurable and*

$$(p-1)(q'-1) \geqq e^{-2m(2a+l)} ,$$

then there is a $\beta \leqq \infty$ such that

$$\|E_{\pi_1} u E_{\pi_2}\|_{p,q} \leqq \|u\|_\beta .$$

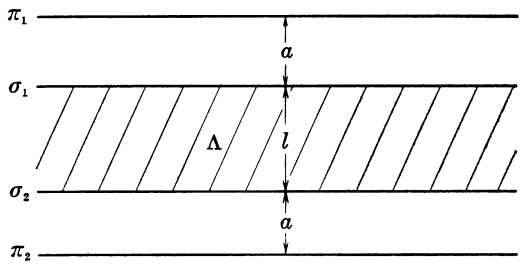

FIGURE III.2

Remark. Here $\|A\|_{p,q}$ is the norm of the operator A as a map from $L^p(Q)$ to $L^q(Q)$, and q' is the index conjugate to q; i.e., $q' - 1 = 1/(q-1)$.

Proof. By the Markov property,

$$\begin{aligned}\|E_{\pi_1} u E_{\pi_2}\|_{p,q} &= \|E_{\pi_1} E_{\sigma_1}^2 u E_{\sigma_2}^2 E_{\pi_2}\|_{p,q} \\ &\leqq \|E_{\sigma_2} E_{\pi_2}\|_{p,r} \|E_{\sigma_1} u E_{\sigma_2}\|_{r,s} \|E_{\pi_1} E_{\sigma_1}\|_{s,q} \\ &\leqq \|E_{\sigma_1} u E_{\sigma_2}\|_{r,s}\end{aligned}$$

if

$$(p-1)/(r-1) = e^{-2ma} , \quad (s-1)/(q-1) = e^{-2ma} , \tag{III.9}$$

This content downloaded from 100.33.74.107 on Sat, 28 Feb 2026 03:57:10 UTC
All use subject to https://about.jstor.org/terms

by Proposition III.2. But if v_j is Σ_{σ_1}-measurable,

$$\| E_{\sigma_1} u E_{\sigma_2} \|_{r,s} = \sup_{v_1, v_2} \frac{\| v_1 u v_2 \|_1}{\| v_1 \|_{r'} \| v_2 \|_s}$$

$$\leqq \| u \|_\beta \sup \frac{\| v_1 v_2 \|_{\beta'}}{\| v_1 \|_{r'} \| v_2 \|_s} \leqq \| u \|_\beta \qquad \text{(by Hölder)}$$

if

$$(r'/\beta' - 1)(s/\beta' - 1) = e^{-2ml} , \tag{III.10}$$

again by Proposition III.2.

Eliminating r and s from (III.9) and (III.10), and solving the resulting quadratic equation yields

$$\beta = \frac{2bc + b + c + [(b - c)^2 + 4(b + 1)(c + 1)e^{-2ml}]^{1/2}}{2(bc - e^{-2ml})} \tag{III.11}$$

where $b = (p - 1)e^{2ma}$, $c = (q' - 1)e^{2ma}$. □

As an immediate consequence we obtain the hypercontractivity of the semigroup $e^{-tH(g)}$ that we used in § II.3:

COROLLARY III.8. *The semigroup defined in* (II.30), $U_t = J_t^* F_{(0,t)} J_0$, *is bounded from* $L^p(Q_{F_1})$ *to* $L^q(Q_{F_1})$ *provided that* $(p - 1)/(q - 1) > e^{-2mt}$.

Proof. Note that $U_t = J_t^* E_t F_{(0,t)} E_0 J_0$ and that $F_{(0,t)} \in \bigcap_{p<\infty} L^p$ by Theorem II.10 (iii). □

If we isolate the norm of $e^{-tH(g)}$, $\| U_t \|_{2,2}$, we obtain:

COROLLARY III.9. *Consider the* $P(\phi)_2$ *Hamiltonian* $H(g) = H_0 + H_I(g)$ *with the standard hypotheses* (P semibounded and $g \in L^1 + L^{1+\varepsilon}$). *Then for any* $\beta > 2$,

$$\| e^{-tH(g)} \| \leqq (\Omega_0, e^{-t(H_0 + \beta H_I(g))} \Omega_0)^{1/\beta} \tag{III.12}$$

provided $t \geqq m^{-1} \ln \beta/(\beta - 2)$.

Remark. We gave a Fock space proof of this estimate in [42] using the Stein Interpolation Theorem, while in [43] we proved a stronger result (at least for some β) for general hypercontractive semigroups; namely, we showed that the bound (III.12) holds for $\beta > 1$, provided $t \geqq 4 \ln 3/m(\beta - 1)$.

Of course a sandwich theorem can also be stated for general regions in terms of the decrease function $e(r)$; for example:

THEOREM III.10. *Suppose* $\mathbf{R}^d$ *is expressed as the disjoint union* $\Lambda_1 \cup \Lambda_2 \cup \Lambda$ *where* $l = \operatorname{dist}(\Lambda_1, \Lambda_2) \geqq 1$. *If* u *is* Σ_Λ*-measurable and*

$$(p - 1)(q' - 1) \geqq e(l) ,$$

This content downloaded from 100.33.74.107 on Sat, 28 Feb 2026 03:57:10 UTC
All use subject to https://about.jstor.org/terms

then there is a $\beta \leqq \infty$ *such that*

$$\| E_{\Lambda_1} u E_{\Lambda_2} \|_{p,q} \leqq \| u \|_\beta .$$

Remark. The index β is given by formula (III.11) with the replacement $e^{-2ml} \to e(l)$.

In § VI, in our discussion of the thermodynamic limit for the entropy, we shall deal with the integrals of products of functions associated with adjacent rectangles. The following two estimates for such integrals are abstractions of methods used in [42]:

LEMMA III.11. *Consider a family of parallel hyperplanes* $\pi_1, \cdots, \pi_{3n+1}$ *with* $\operatorname{dist}(\pi_{3j-1}, \pi_{3j}) = l$, $\operatorname{dist}(\pi_{3j-2}, \pi_{3j-1}) = \operatorname{dist}(\pi_{3j}, \pi_{3j+1}) = a$, *and let* Λ_j *be the region between* π_{3j-1} *and* π_{3j} *for* $j = 1, \cdots, n$. *Then if* u_j *is* Σ_{Λ_j}-*measurable,*

$$\| u_1 u_2 \cdots u_n \|_1 \leqq \prod_{j=1}^n \| u_j \|_\beta \tag{III.13}$$

where $\beta = (e^{2ma} + 1)/(e^{2ma} - e^{-ml})$.

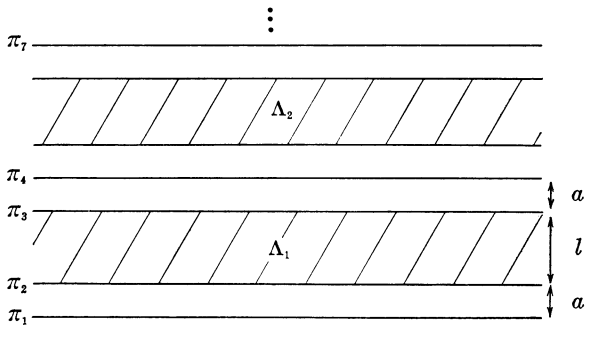

FIGURE III.3

Proof. Letting $v_j = | u_j |$, we have by the Markov property,

$$\begin{aligned} \| u_1 \cdots u_n \|_1 &= (\omega_0, v_1 \cdots v_n \omega_0) \\ &= (\omega_0, E_{\pi_1} v_1 E_{\pi_4} \cdot E_{\pi_4} v_2 E_{\pi_7} \cdots v_n E_{\pi_{3n+1}} \omega_0) \\ &\leqq \prod_{j=1}^n \| E_{\pi_{3j-2}} v_j E_{\pi_{3j+1}} \|_{2,2} . \end{aligned}$$

Thus (III.13) follows from the Sandwich Estimate, Theorem III.7. □

By induction we can extend this result to a d-dimensional array of rectangles:

THEOREM III.12 (Checkerboard Estimate). *For each* $i = 1, \cdots, d$ *let* $\{\pi_j^{(i)}\}_{j=1,\cdots 3n_i+1}$ *be a family of parallel hyperplanes with separation parameters* a_i *and* l_i *as in Lemma* III.11. *Assume that these* d *families are*

This content downloaded from 100.33.74.107 on Sat, 28 Feb 2026 03:57:10 UTC
All use subject to https://about.jstor.org/terms

orthogonal to one another and let $\{\Lambda_\alpha\}$ *be the* $n_1 \times \cdots \times n_d$ *array of hyperrectangles with sides of length* $l_1, \cdots, l_d$ *formed by these planes. Then if* u_α *is* Σ_{Λ_α}*-measurable,*

$$\| \prod_\alpha u_\alpha \|_1 \leqq \prod_\alpha \| u_\alpha \|_{\beta_1 \cdots \beta_d} \tag{III.14}$$

where $\beta_i = (e^{2ma_i} + 1)/(e^{2ma_i} - e^{-ml_i})$.

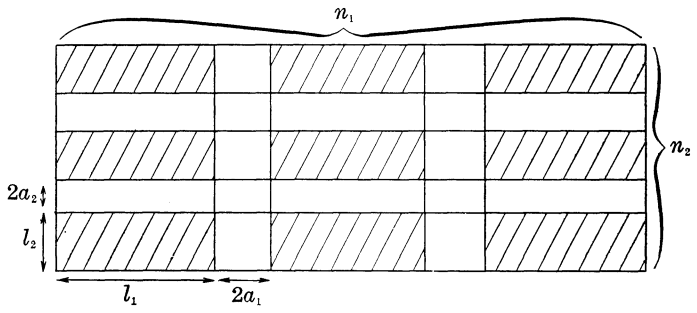

FIGURE III.4

Next we prove the L^p-estimate mentioned in Remark 3 following Theorem II.10. Actually this estimate does not directly use hypercontractivity but only the estimate [43],

$$-E(g) \leqq \int \alpha_\infty(g(x))dx \ . \tag{III.15}$$

Here $\alpha_\infty(\lambda) = -\lim_{g\to 1} E(\lambda g)/|\operatorname{supp} g|$ is the vacuum energy per unit volume for the $P(\phi)_2$ theory [41].

LEMMA III.13. *Let* $g \in L^1 \cap L^{1+\varepsilon}(\mathbf{R}^2)$, *$P$ be a semibounded polynomial, and define* $U(g) = \int :P(\phi(x)): g(x)d^2x\omega_0$. *Then for* $p < \infty$

$$\| e^{-U(g)} \|_p \leqq \exp\left(p^{-1} \int \alpha_\infty(pg(x))d^2x\right) . \tag{III.16}$$

Proof. We approximate g by nonnegative functions g_n in $L^1 \cap L^{1+\varepsilon}(\mathbf{R}^2)$ of the form

$$g_n(x) = \sum_{j=-n^2}^{n^2} h_j(x_1)\chi_{(j/n,(j+1)/n)}(x_2)$$

such that $g_n \to g$ in $L^{1+\varepsilon}$ with $\sup \| g_n \|_1 < \infty$. By Corollary II.12 it is sufficient to prove (III.16) for such g_n.

But by Theorem II.16,

$$\| e^{-U(g_n)} \|_p^p = \left(\Omega_0, \prod_{j=-n^2}^{n^2} e^{-H_j/n}\Omega_0\right)$$

where $H_j = H_0 + pH_I(h_j)$. Since $\| e^{-H_j} \| = e^{-E(ph_j)}$,

This content downloaded from 100.33.74.107 on Sat, 28 Feb 2026 03:57:10 UTC
All use subject to https://about.jstor.org/terms

$$\| e^{-U(g_n)} \|_p^p \leqq \exp\left(-\sum_j E(ph_j)/n\right) \leqq \exp\left(\sum_j \int \alpha_\infty(ph_j(x_1))dx_1/n\right)$$
$$= \exp\left(\int \alpha_\infty(pg_n(x))d^2x\right). \qquad \square$$

Remark. From the bounds $\alpha_\infty(\lambda) \leqq C_1\lambda^2$ and $\alpha_\infty(\lambda) \leqq C_2\lambda^{1+\varepsilon}$ [43], we see that the Lemma, and thus Theorem II.10, extend to the case $g \in L^2 + L^{1+\varepsilon}$, $g \geqq 0$.

We conclude this section with a note about a technical condition of Osterwalder and Schrader [72]. They isolated two properties of the ground state energy $E(g)$ of a spatially cutoff Hamiltonian $H(g)$ which would imply the convergence of $E(g)/|\operatorname{supp} g|$, the energy per unit volume. These two properties (called P and S) correspond to the monotonicity and subadditivity properties, respectively, which occur in statistical mechanics in the proof of the convergence of the entropy per unit volume (see § VI). The subadditivity property S can be stated as follows:

There is a decrease function $\rho: [2, \infty) \to \mathbf{R}^+$ with $\lim_{x\to\infty} \rho(x) = 0$ such that, for any finite set of intervals $\{I_i\}$ in $\mathbf{R}$ with $r = \min \operatorname{dist}(I_i, I_j) \geqq 2$, we have

$$\text{(S)} \qquad \sum_i E(g_i) \leqq E\left(\sum_i g_i\right) + \rho(r) \sum_i |I_i|,$$

where $0 \leqq g_i(x) \leqq 1$ is supported in I_i.

Osterwalder and Schrader succeeded in proving (S) only for the analogue of the $P(\phi)_2$ theory where H_0 is replaced by the number operator N (by methods similar to our proof of Lemma III.4). Although Guerra [41] subsequently gave a simple proof of the convergence of the energy per unit volume for $P(\phi)_2$ that avoided properties (P) and (S), we wish to point

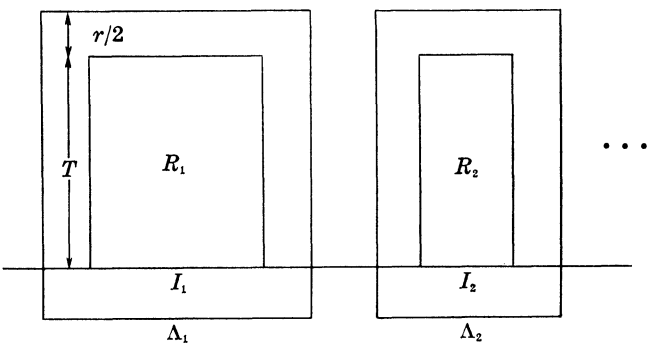

FIGURE III.4

This content downloaded from 100.33.74.107 on Sat, 28 Feb 2026 03:57:10 UTC
All use subject to https://about.jstor.org/terms

out here that one can proceed to this result by proving (S) by means of the above estimates: Thus consider a set of intervals $\{I_i\}$ with $r = \min \operatorname{dist}(I_i, I_j) \geqq 2$. Define R_i to be the rectangle with base I_i and height T, and Λ_i to be the rectangle formed by putting a border of width $r/2$ around R_i.

Let $g = \Sigma g_i$ and χ_T be the characteristic function of the interval $[0, T]$. By Feynman-Kac-Nelson,

$$-E(g) = \lim_{T\to\infty} T^{-1} \ln \| e^{-U(g\chi_T)} \|_1 . \tag{III.17}$$

But by the argument of Lemma III.11

$$\| e^{-U(g\chi_T)} \|_1 \leqq \prod_i \| e^{-U(g_i\chi_T)} \|_p \tag{III.18}$$

where $p \equiv p(r) = (e^{mr} + 1)/(e^{mr} - 1)$ is a decreasing function of r.

Since $\ln \|f\|_{1/a}$ is convex in $a \in [0, 1]$ [17, p. 524],

$$\ln \| f \|_p \leqq \frac{q-p}{p(q-1)} \ln \| f \|_1 + \frac{q(p-1)}{p(q-1)} \ln \| f \|_q \tag{III.19}$$

for $1 \leqq p \leqq q$. Choosing $q = p(2)$, we deduce from (III.18) and (III.19) that

$$\ln \| e^{-U(g\chi_T)} \|_1 \leqq \alpha(r) \sum_i \ln \| e^{-U(g_i\chi_T)} \|_1 + \text{const.}\, e^{-mr} \sum_i \ln \| e^{-U(g_i\chi_T)} \|_{p(2)}$$

where $\alpha(r) = (q-p)/p(q-1) < 1$. Therefore by (III.17) and Lemma III.13,

$$-E(g) \leqq -\alpha(r) \sum_i E(g_i) + \text{const.}\, e^{-mr} \sum_i |I_i| ,$$

which is a stronger result than (S).

III.3. *Hypercontractivity and the Mass Gap.* In this subsection we wish to point out that hypercontractivity of the measure (as proved for the free measure in § III.1) implies a mass gap in the theory:

THEOREM III.14. *Let* (ϕ, Q, Σ, μ) *be a Euclidean Markov field theory satisfying Nelson's axioms of* § II.2. *Suppose that* μ *is hypercontractive with respect to hyperplanes*; i.e., *if* u_1 *and* u_2 *are supported in regions* Λ_1 *and* Λ_2 *separated by parallel hyperplanes a distance* r *apart, then* $\| u_1 u_2 \|_1 \leqq \| u_1 \|_{p_1} \| u_2 \|_{p_2}$ *provided* $(p_1 - 1)(p_2 - 1) \geqq e^{-2m_1 r}$ *for some constant* $m_1 > 0$. *Then the Hamiltonian* H (cf. Theorem II.7) *has a spectral gap* ΔE *above its vacuum energy satisfying* $\Delta E \geqq m_1$

Remarks 1. By $\| u \|_p$ we mean, of course, $\left[\int |u|^p \, d\mu\right]^{1/p}$.

2. It is sufficient to assume only a little bit of hypercontractivity; namely, for some r_0, p_1, p_2 with $(p_1 - 1)(p_2 - 1) < 1$, we have $\| u_1 u_2 \|_1 \leqq \| u_1 \|_{p_1} \| u_2 \|_{p_2}$ whenever supp u_1 and supp u_2 are separated by hyperplanes a distance r_0 apart. For it follows that $e^{-r_0 H}$ is a contraction from $L^{p_1}(Q_F)$ to $L^{p_2'}(Q_F)$ and, by convexity and the fact that e^{-tH} is a contraction on L^∞,

This content downloaded from 100.33.74.107 on Sat, 28 Feb 2026 03:57:10 UTC
All use subject to https://about.jstor.org/terms

that e^{-nr_0H} is a contraction from L^{p_1} to L^q where $q = p_1(p_2'/p_1)^n$. In this way we can recover the exponential hypercontractivity in the hypothesis of the theorem.

3. Note the special significance of hypercontractivity for *planar* regions for the existence of a mass gap (see Remark 6 after Theorem III.3).

Proof. As in Theorem II.7, let E_0 be the projection in $L^2(Q, d\mu)$ onto the "time-zero" Hilbert space $\mathcal{H}$, let $U(t)$ be the unitary operator giving translation in the "time" direction, and let $\Omega = E_0 1$ be the unique vacuum vector for H. Write $\langle u\rangle \equiv \int u d\mu$. Then the subspace $\{\Omega\}^\perp$ in $\mathcal{H}$ is spanned by vectors of the form $\psi = u - \langle u\rangle$, $u \in \operatorname{Ran} E_0$. Thus the gap

$$\begin{aligned}\Delta E &= -\sup_{\psi\perp\Omega} \lim_{t\to\infty} \frac{1}{t} \log\left[(\psi, e^{-tH}\psi)/\|\psi\|^2\right] \\ &= -\sup_{u\in \operatorname{Ran} E_0} \lim_{t\to\infty} \frac{1}{t} \log \frac{\langle \bar{u}\, U(t)u\rangle - |\langle u\rangle|^2}{\langle |u|^2\rangle - |\langle u\rangle|^2}.\end{aligned} \tag{III.20}$$

We wish to show that the ratio in (III.20) can be dominated by const. $e^{-m_1 t}$. First we remark that it is sufficient to consider real u. For if $u = v + iw$ where v and w are real, then the ratio is

$$\frac{\langle v\, U(t)v\rangle - \langle v\rangle^2 + \langle w\, U(t)w\rangle - \langle w\rangle^2}{\langle v^2\rangle - \langle v\rangle^2 + \langle w^2\rangle - \langle w\rangle^2}$$

where we have used reflection invariance (Proposition II.2(i)) to eliminate the cross term $i\langle v\, Uw\rangle - i\langle w\, Uv\rangle$. Secondly, we need only consider $u \geqq 0$ so that $\langle u\rangle = \|u\|_1$, for numerator and denominator in (III.20) are invariant under the translation $u \to u + c$. Now let $p = 1 + e^{-m_1 t}$. By hypercontractivity and translation invariance

$$\langle u\, U(t)u\rangle \leqq \|u\|_p \, \|U(t)u\|_{p'} = \|u\|_p^2 \leqq \|u\|_1^{(4-2p)/p} \, \|u\|_2^{(4(p-1)/p)}$$

by (III.19). Thus

$$\frac{\langle u\, U(t)u\rangle - \langle u\rangle^2}{\langle u^2\rangle - \langle u\rangle^2} \leqq \frac{x^{2(p-1)/p} - 1}{x - 1} \equiv f(x)$$

where $x = (\|u\|_2/\|u\|_1)^2 \geqq 1$. Now it is easy to see that the function $f(x)$ is a decreasing function of x for $x \geqq 1$ and that its maximum at $x = 1$ is $2(p-1)/p$. Therefore the ratio in (III.20) can be dominated by $2e^{-m_1 t} \times (1 + e^{-m_1 t})^{-1}$. This proves the theorem. □

Theorem III.14 suggests that it might be possible to show the existence of a mass gap by proving that the interacting measure $d\nu_g$ of (II.25) is hypercontractive, uniformly in g. This seems to be a difficult question whose appeal is diminished by the following example of Nelson's of a

This content downloaded from 100.33.74.107 on Sat, 28 Feb 2026 03:57:10 UTC
All use subject to https://about.jstor.org/terms

semigroup with a mass gap that does *not* enjoy hypercontractive properties:

Example. Consider the operator P^t defined on $L^2(M, d\mu)$, where M is a probability measure space, by

$$P^t f = e^{-mt} f + (1 - e^{-mt}) \int f d\mu .$$

It is easy to check that P^t defines a self-adjoint semigroup whose generator has spectrum $\{0, m\}$. But clearly P^t does not improve L^p properties of f.

This content downloaded from 100.33.74.107 on Sat, 28 Feb 2026 03:57:10 UTC
All use subject to https://about.jstor.org/terms