NOTES:

1. UNLESS OTHERWISE SPECIFIED, ALL CAPACITORS ARE 16V X7R 10%.
2. UNLESS OTHERWISE SPECIFIED, ALL RESISTORS ARE 1/10W 1%.
3. APPLY SILICONE CONFORMAL COATING POST-ASSEMBLY.

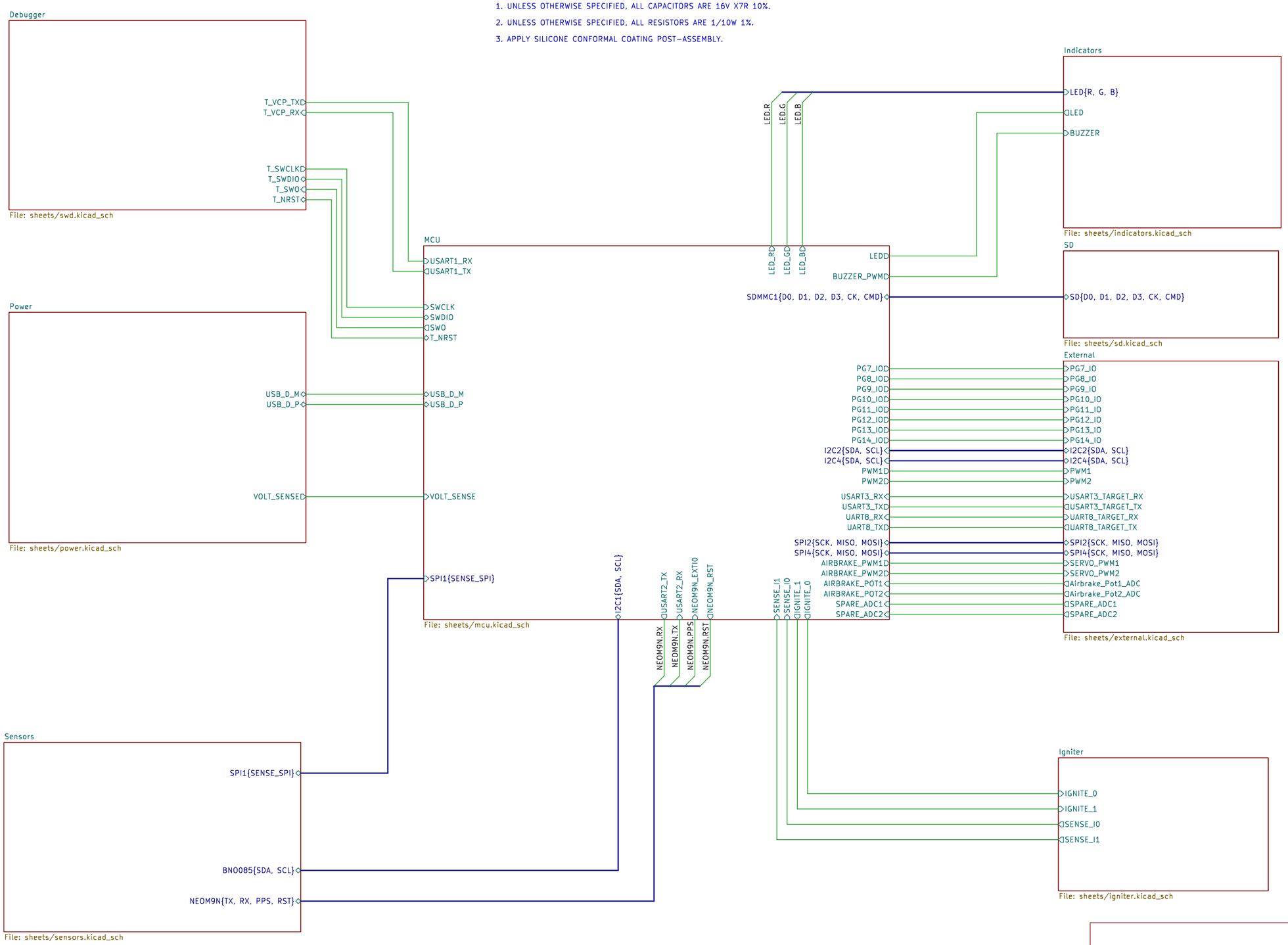

Implemented Logan's comments
By KOICHI KIMOTO
Stanford Space Initiative

Sheet: /
File: aerolotl.kicad_sch

Title: AEROLOTL NEW COLLINS FLIGHT COMPUTER

Size: A3	Date: 2026-02-27	**Rev: 2**
KiCad E.D.A. 9.0.6		Id: 1/9

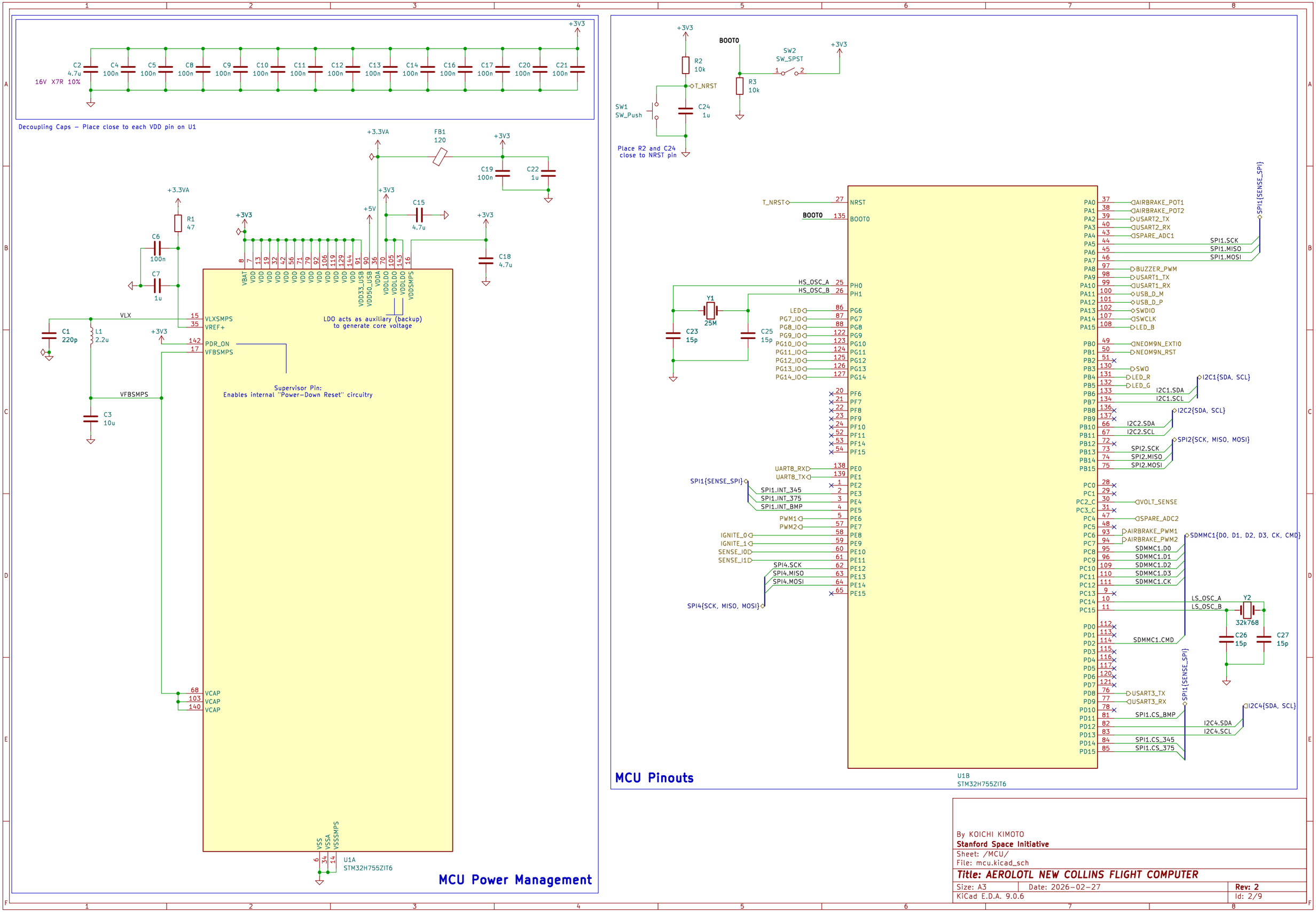

By KOICHI KIMOTO
Stanford Space Initiative
Sheet: /MCU/
File: mcu.kicad_sch

Title: AEROLOTL NEW COLLINS FLIGHT COMPUTER

Size: A3	Date: 2026-02-27	**Rev: 2**
KiCad E.D.A. 9.0.6		Id: 2/9

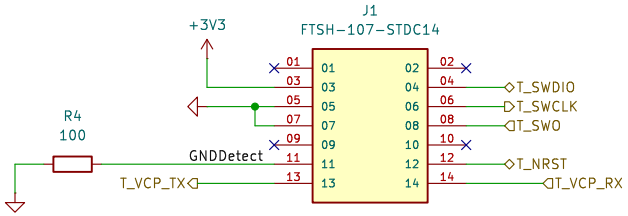

Sheet: /Debugger/
File: swd.kicad_sch

Title:

Size: USLetter	Date: 2026-02-27	**Rev: 1**
KiCad E.D.A. 9.0.6		Id: 3/9

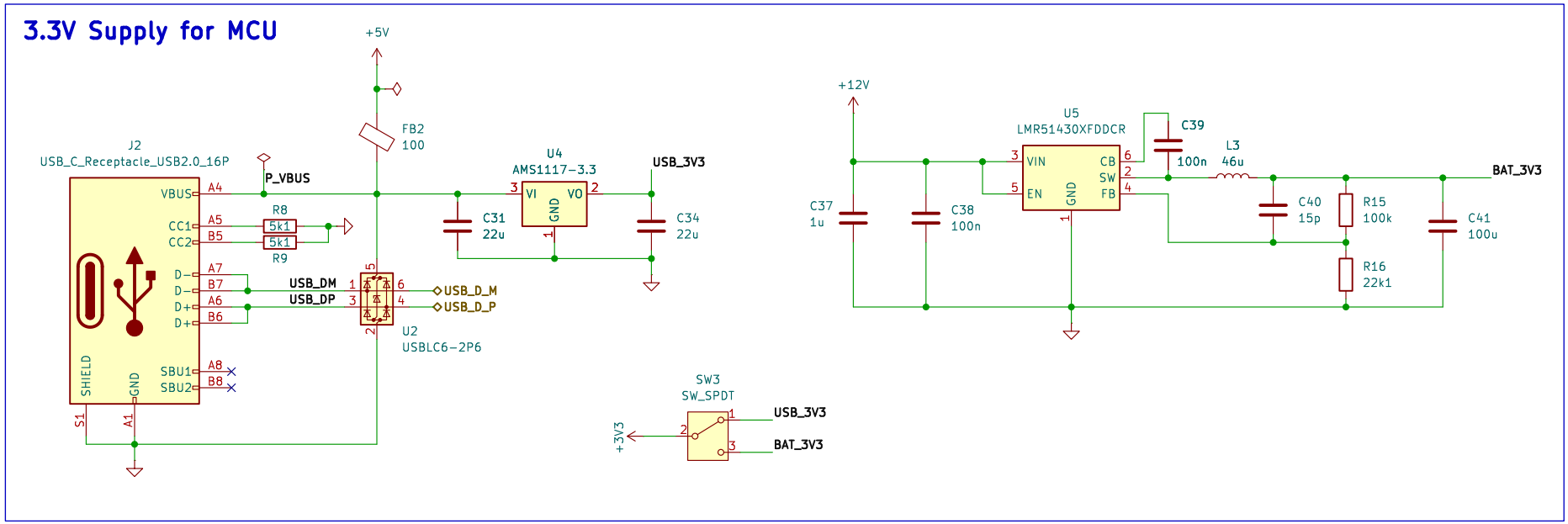

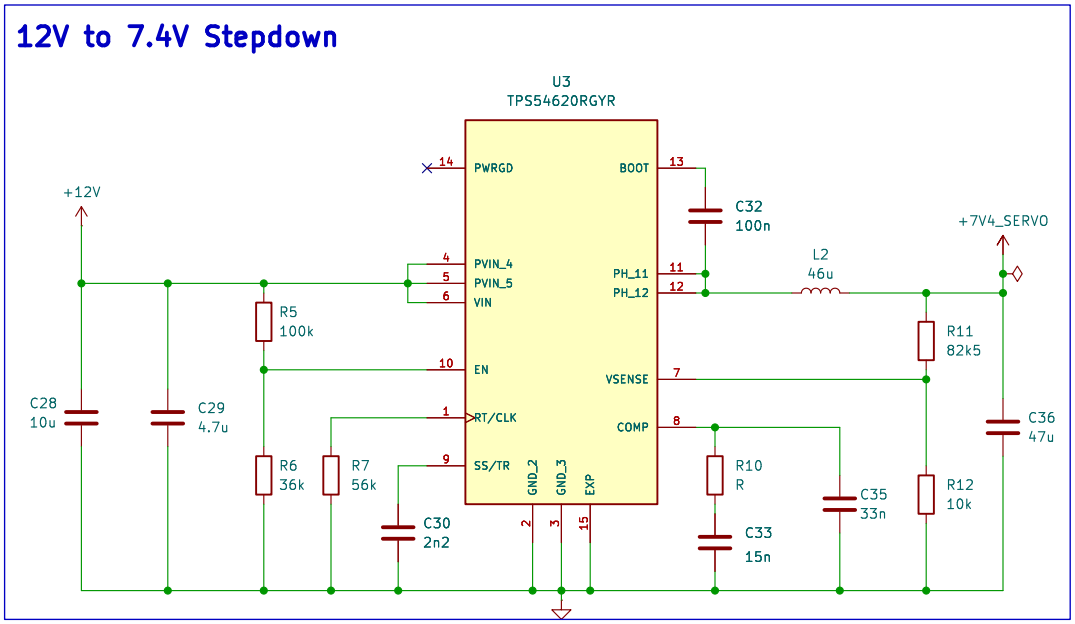

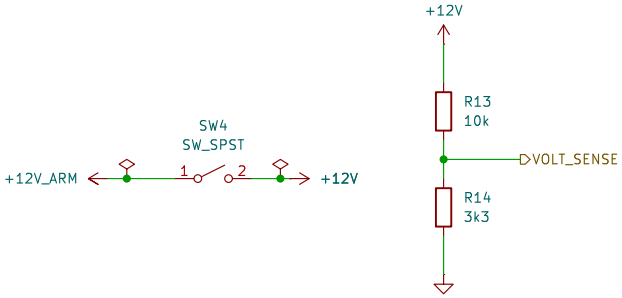

Sheet: /Power/
File: power.kicad_sch

Title:

Size: USLetter	Date: 2026−02−27	Rev: 1
KiCad E.D.A. 9.0.6		Id: 4/9

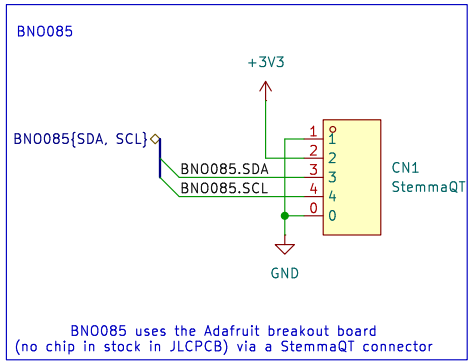

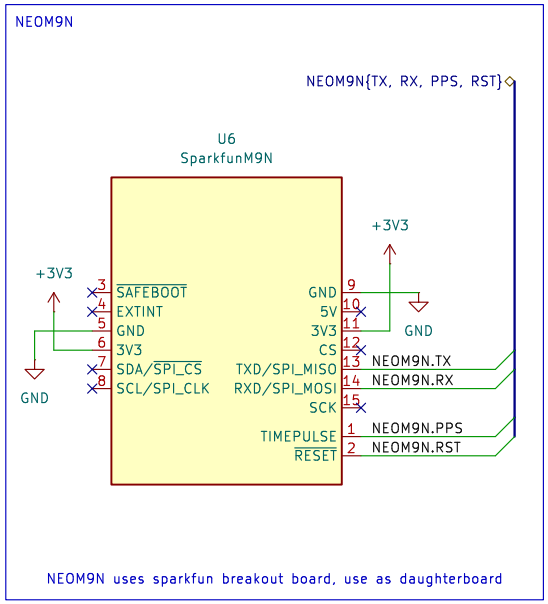

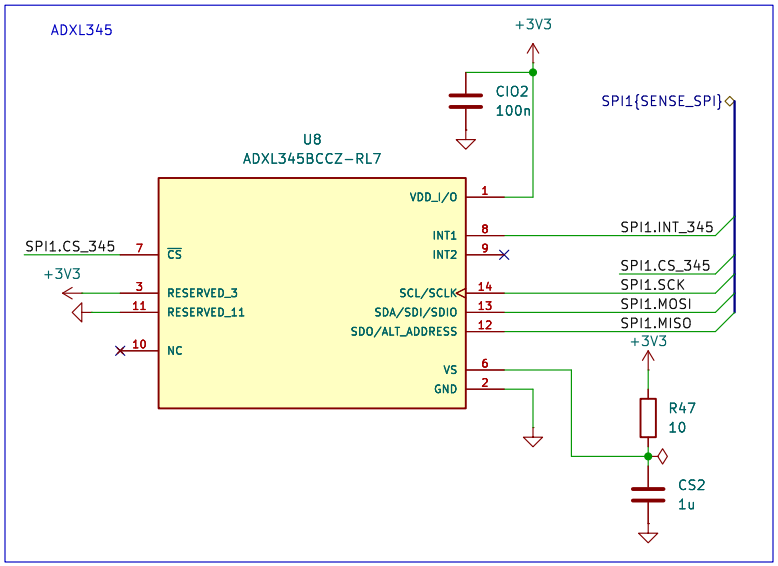

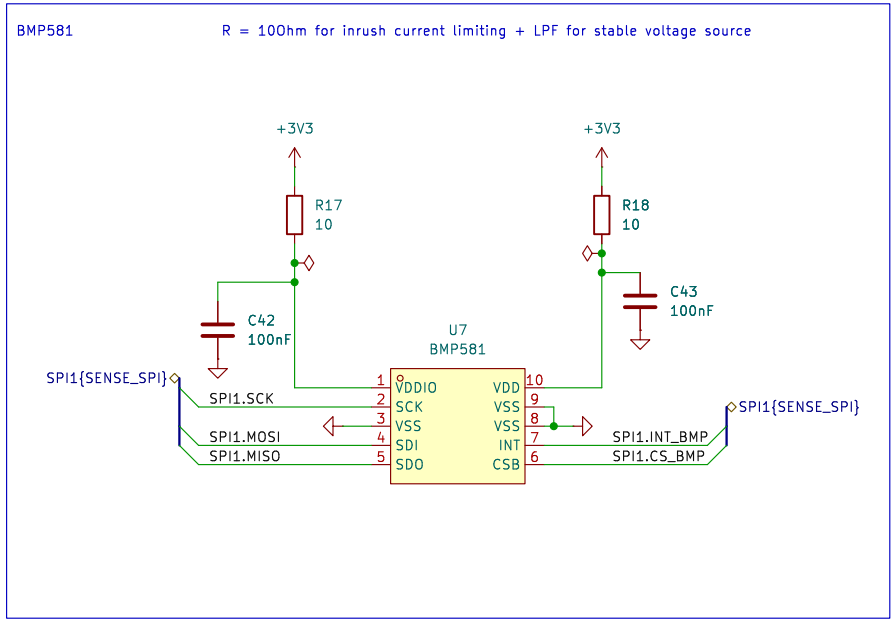

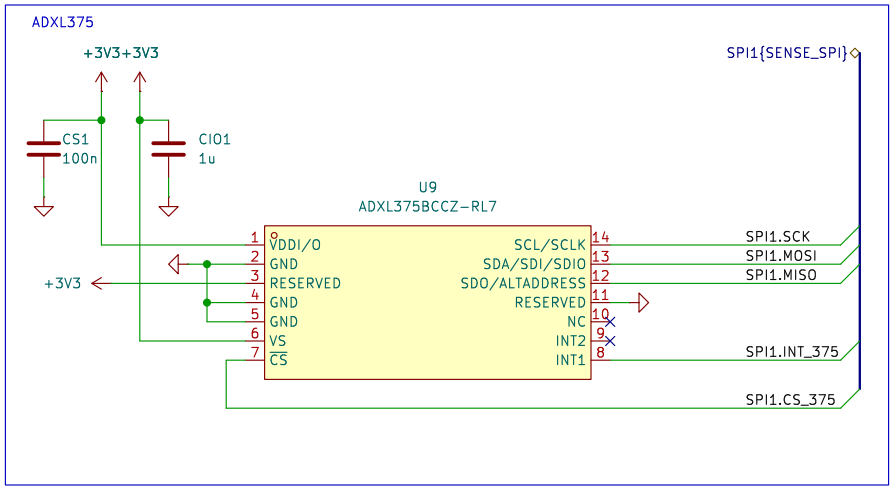

Sheet: /Sensors/
File: sensors.kicad_sch

Title:

Size: USLetter	Date: 2026-02-27	**Rev: 1**
KiCad E.D.A. 9.0.6		Id: 5/9

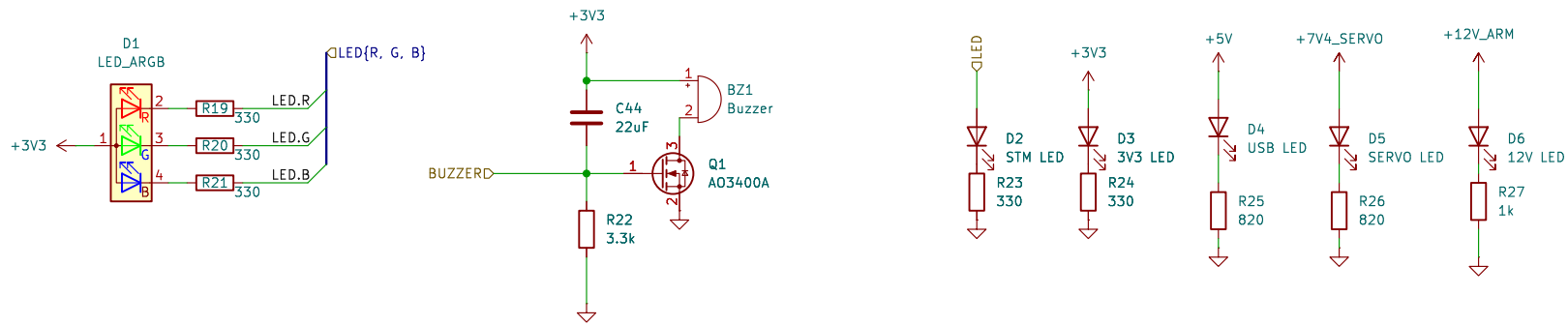

Implemented Logan's comments
By KOICHI KIMOTO
Stanford Space Initiative

Sheet: /Indicators/
File: indicators.kicad_sch

Title: AEROLOTL NEW COLLINS FLIGHT COMPUTER

Size: USLetter	Date: 2026-02-27	**Rev: 2**
KiCad E.D.A. 9.0.6		Id: 6/9

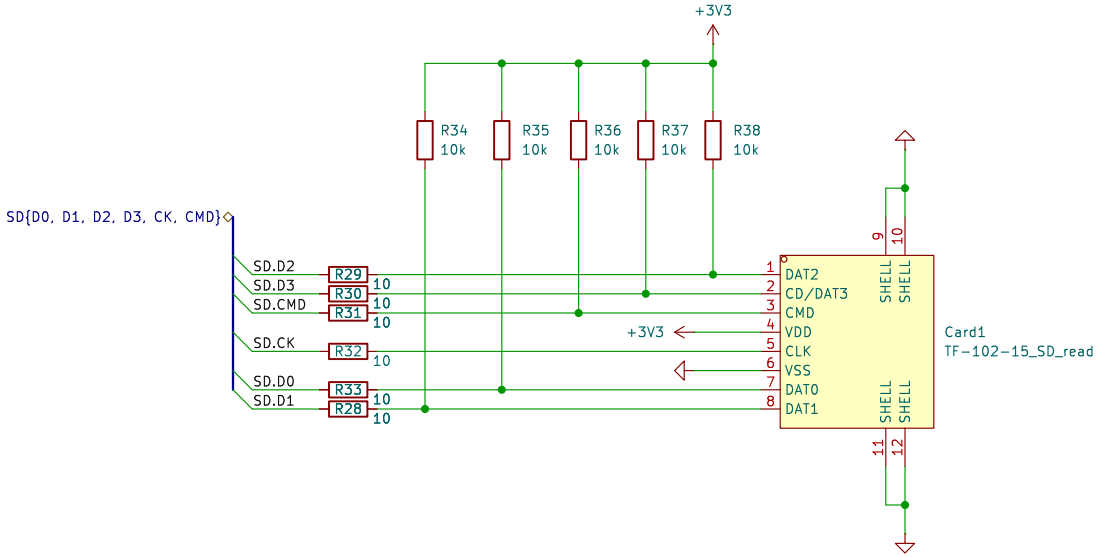

Note: make trace length short (< 2 inch from MCU to sd card reader)

Sheet: /SD/
File: sd.kicad_sch

Title:

Size: USLetter	Date: 2026-02-27	**Rev: 1**
KiCad E.D.A. 9.0.6		Id: 8/9

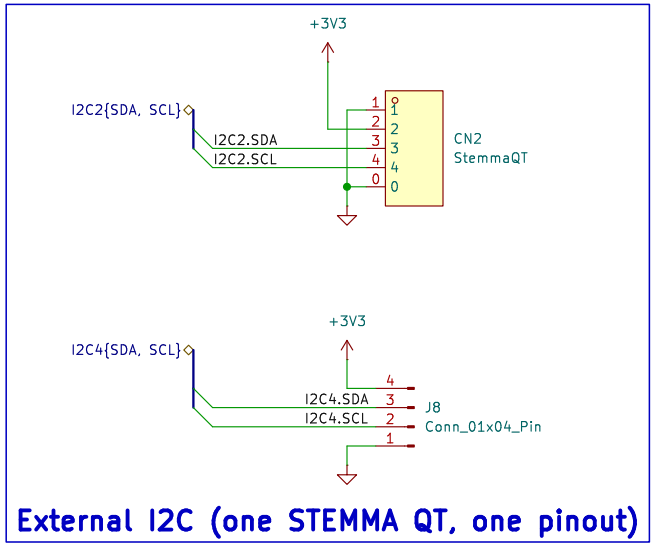

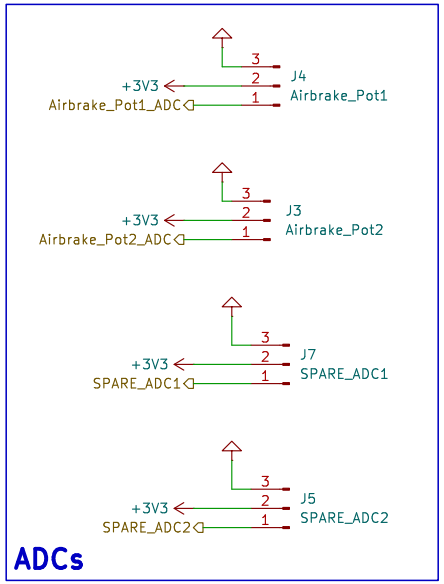

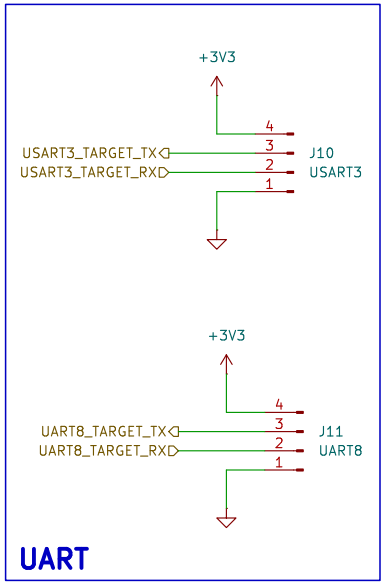

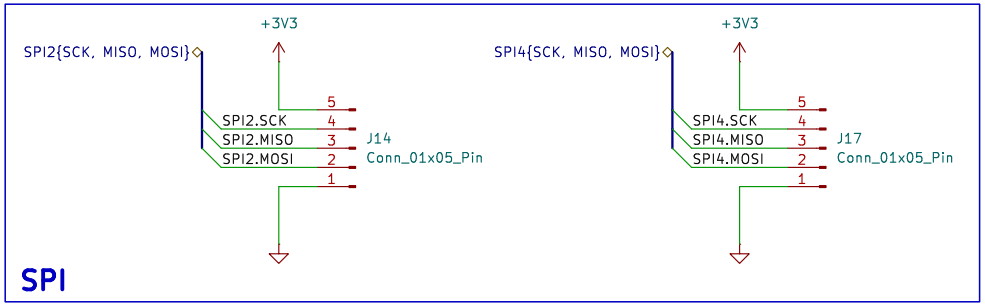

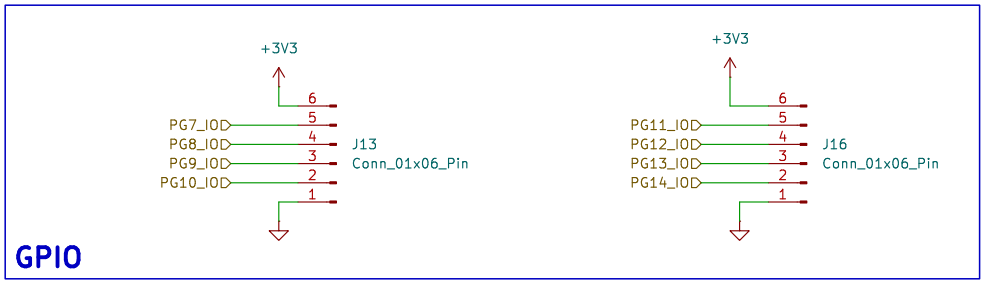

Sheet: /External/
File: external.kicad_sch

Title:

Size: USLetter	Date: 2026-02-27	Rev: 1
KiCad E.D.A. 9.0.6		Id: 9/9

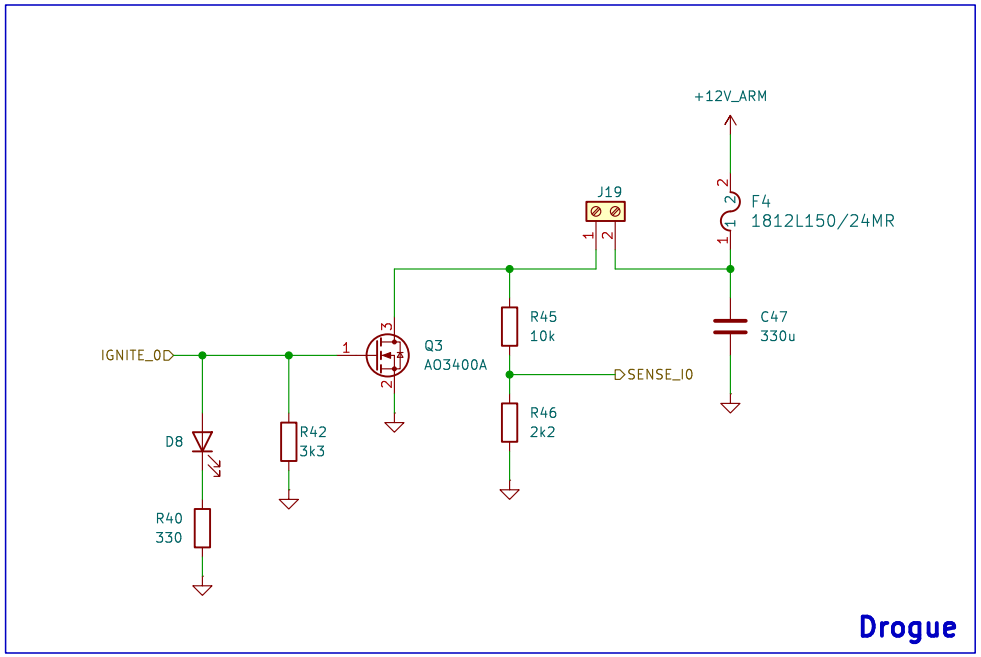

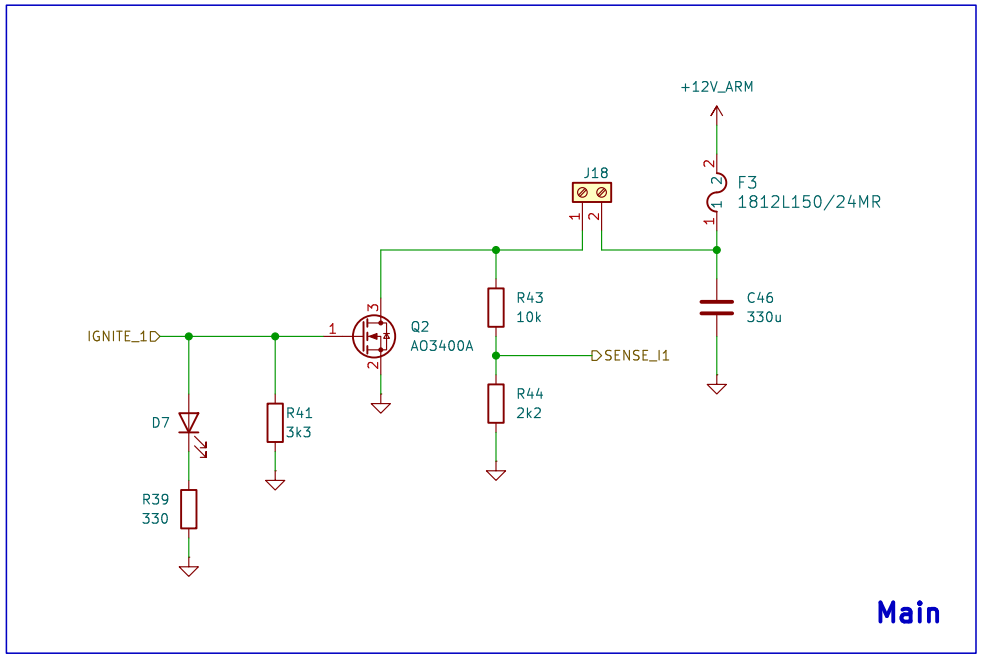

Sheet: /Igniter/
File: igniter.kicad_sch

Title:

Size: USLetter	Date: 2026-02-27	**Rev: 1**
KiCad E.D.A. 9.0.6		Id: 10/9