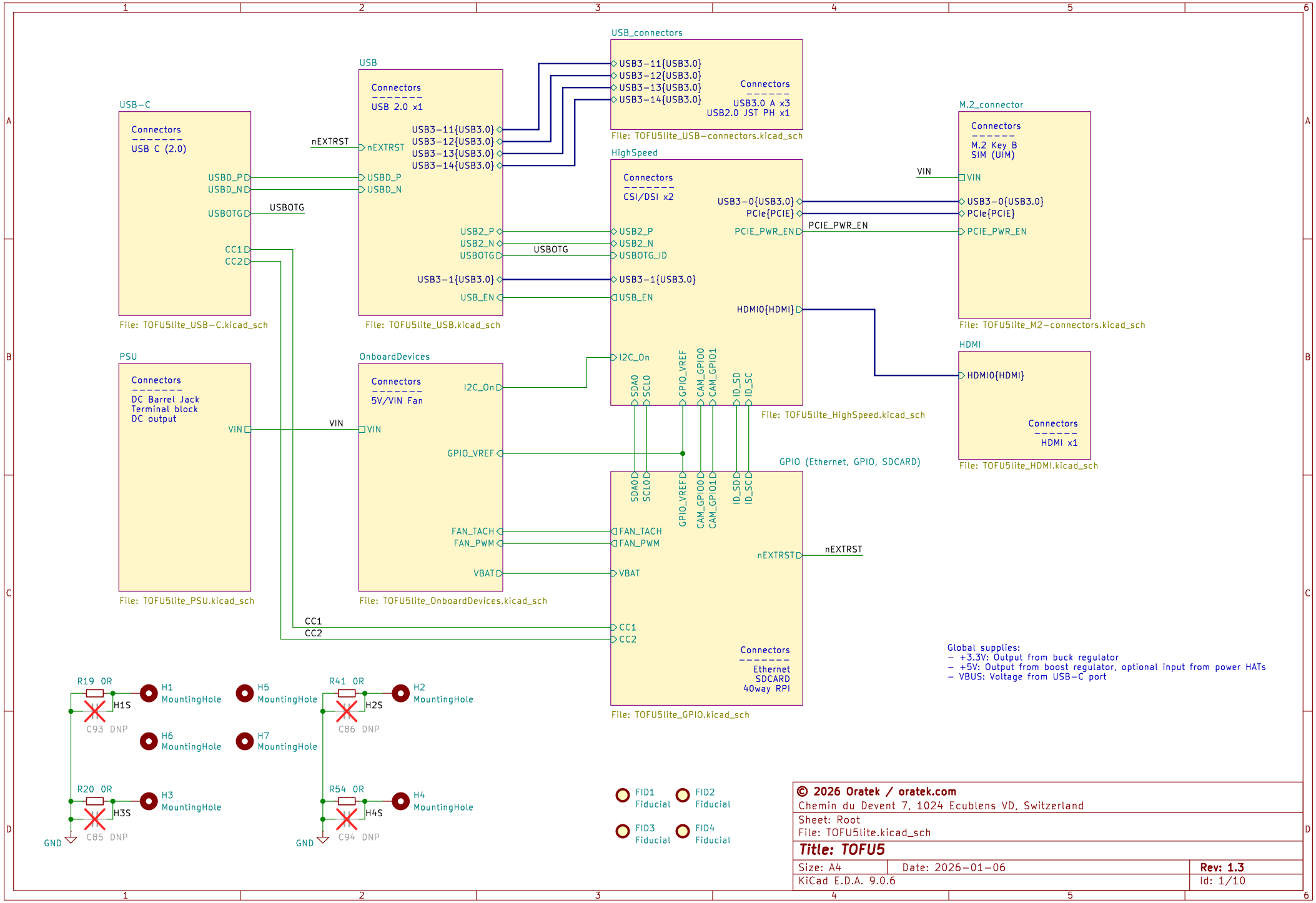
USB_connectors
USB3-11{USB3.0}
USB3-12{USB3.0}
USB3-13{USB3.0}
USB3-14{USB3.0}
Connectors
USB3.0 A x3
USB2.0 JST PH x1
File: TOFU5lite_USB-connectors.kicad_sch
USB
Connectors
USB 2.0 x1
nEXTRST
USB3-11{USB3.0}
USB3-12{USB3.0}
USB3-13{USB3.0}
USB3-14{USB3.0}
USBD_P
USBD_N
USB2_P
USB2_N
USBOTG
USB3-1{USB3.0}
USB_EN
File: TOFU5lite_USB.kicad_sch
USB-C
Connectors
USB C (2.0)
USBD_P
USBD_N
USBOTG
CC1
CC2
File: TOFU5lite_USB-C.kicad_sch
HighSpeed
Connectors
CSI/DSI x2
USB3-0{USB3.0}
PCIe{PCIE}
PCIE_PWR_EN
USB2_P
USB2_N
USBOTG_ID
USB3-1{USB3.0}
USB_EN
HDMI0{HDMI}
I2C_On
SDA0
SCL0
GPIO_VREF
CAM_GPIO0
CAM_GPIO1
ID_SD
ID_SC
File: TOFU5lite_HighSpeed.kicad_sch
M.2_connector
Connectors
M.2 Key B
SIM (UIM)
VIN
USB3-0{USB3.0}
PCIe{PCIE}
PCIE_PWR_EN
File: TOFU5lite_M2-connectors.kicad_sch
HDMI
HDMI0{HDMI}
Connectors
HDMI x1
File: TOFU5lite_HDMI.kicad_sch
PSU
Connectors
DC Barrel Jack
Terminal block
DC output
VIN
File: TOFU5lite_PSU.kicad_sch
OnboardDevices
Connectors
5V/VIN Fan
I2C_On
VIN
GPIO_VREF
FAN_TACH
FAN_PWM
VBAT
File: TOFU5lite_OnboardDevices.kicad_sch
GPIO (Ethernet, GPIO, SDCARD)
SDA0
SCL0
GPIO_VREF
CAM_GPIO0
CAM_GPIO1
ID_SD
ID_SC
FAN_TACH
FAN_PWM
nEXTRST
VBAT
CC1
CC2
Connectors
Ethernet
SDCARD
40way RPI
File: TOFU5lite_GPIO.kicad_sch
Global supplies:
- +3.3V: Output from buck regulator
- +5V: Output from boost regulator, optional input from power HATs
- VBUS: Voltage from USB-C port
R19 0R
H1S
C93 DNP
H1 MountingHole
H6 MountingHole
H5 MountingHole
H7 MountingHole
R41 0R
H2S
C86 DNP
H2 MountingHole
R20 0R
H3S
C85 DNP
H3 MountingHole
R54 0R
H4S
C94 DNP
H4 MountingHole
GND
FID1 Fiducial
FID2 Fiducial
FID3 Fiducial
FID4 Fiducial
© 2026 Oratek / oratek.com
Chemin du Devent 7, 1024 Ecublens VD, Switzerland
Sheet: Root
File: TOFU5lite.kicad_sch
Title: TOFU5
Size: A4
Date: 2026-01-06
Rev: 1.3
KiCad E.D.A. 9.0.6
Id: 1/10

USB3.0 Hub (4x)

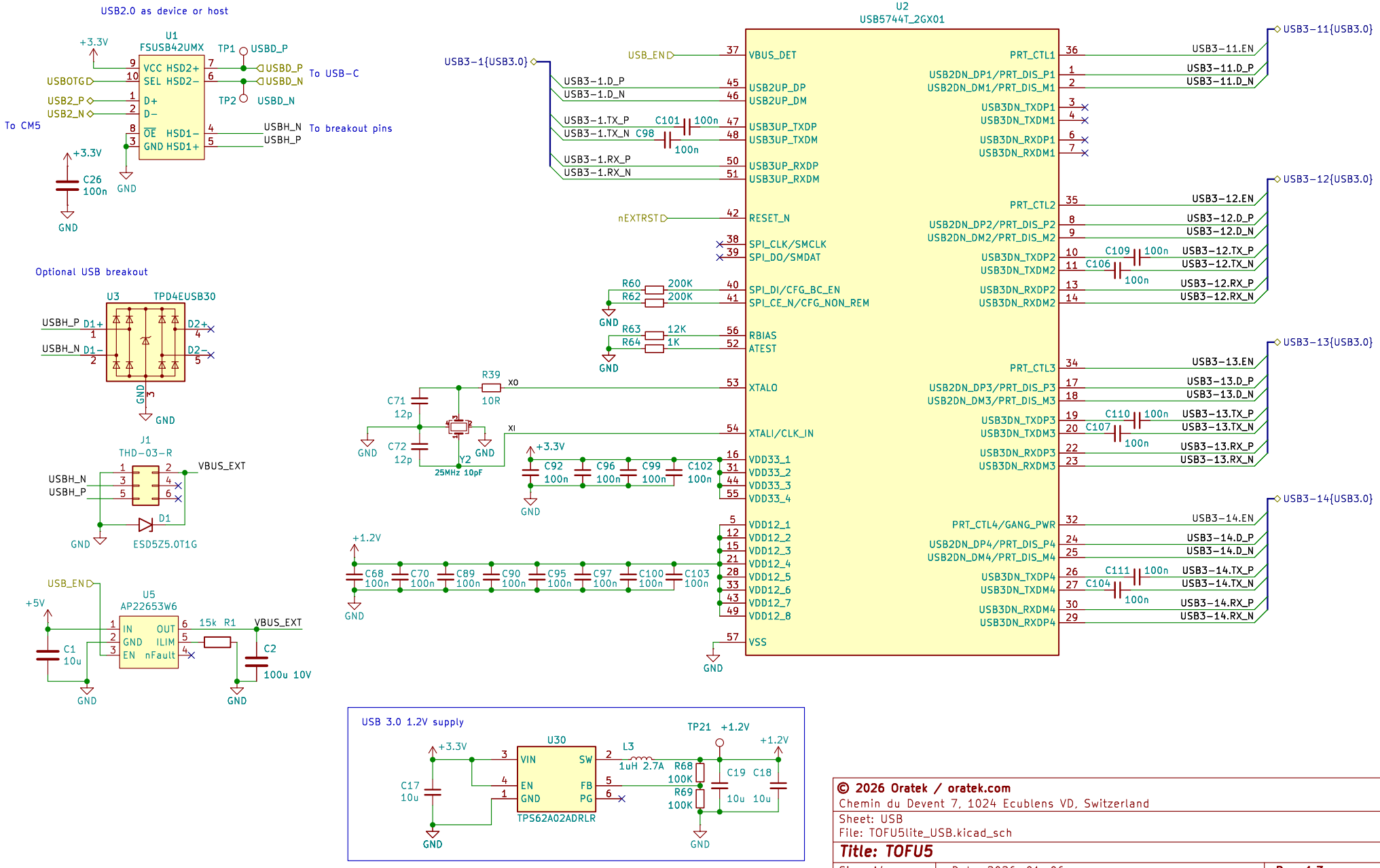

© 2026 Oratek / oratek.com
Chemin du Devent 7, 1024 Ecublens VD, Switzerland

Sheet: USB
File: TOFU5lite_USB.kicad_sch

Title: TOFU5

Size: A4	Date: 2026−01−06	Rev: 1.3
KiCad E.D.A. 9.0.6		Id: 2/10

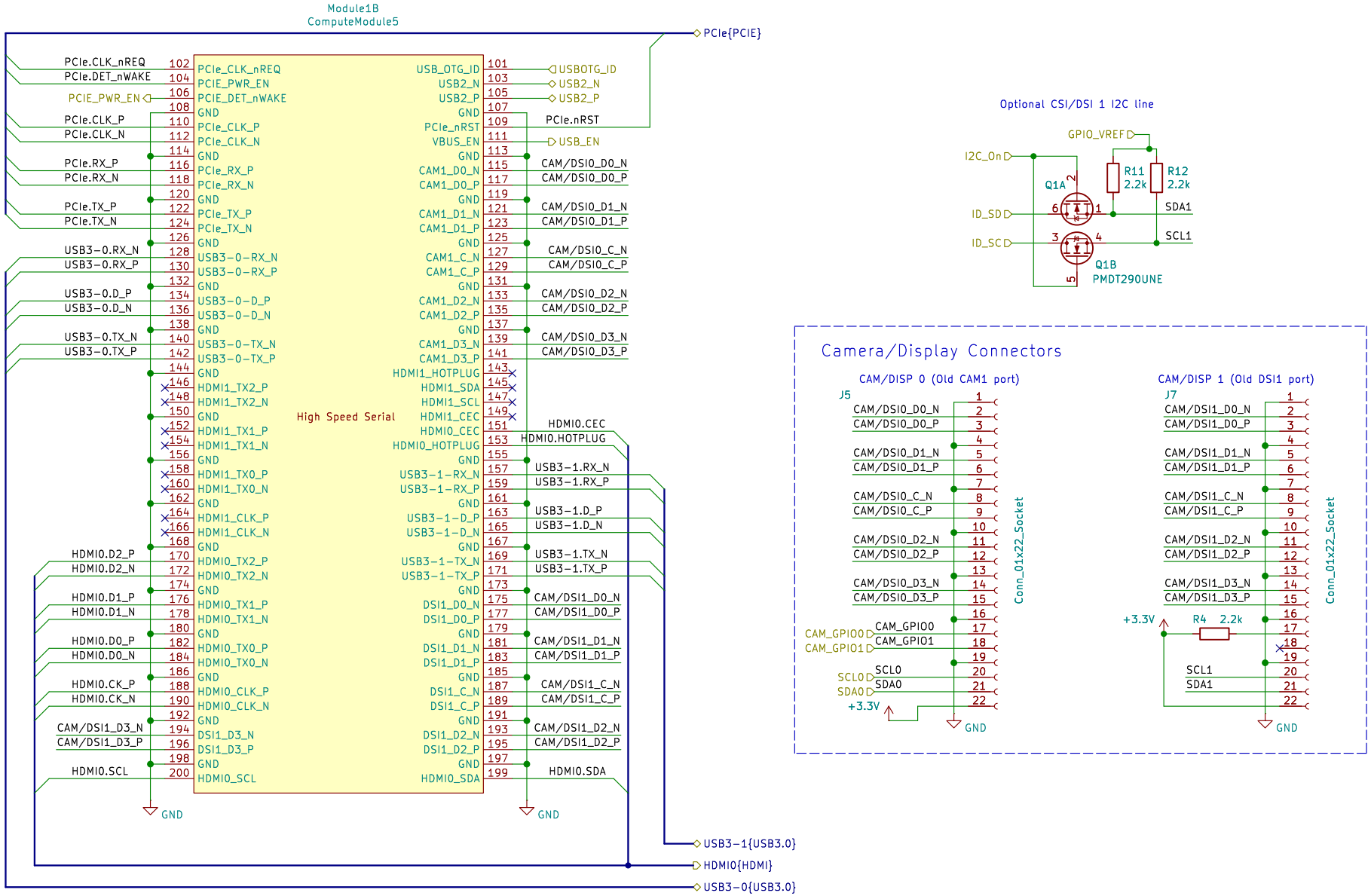

© 2026 Oratek / oratek.com
Chemin du Devent 7, 1024 Ecublens VD, Switzerland

Sheet: HighSpeed
File: TOFU5lite_HighSpeed.kicad_sch

Title: TOFU5

Size: A4	Date: 2026-01-06	Rev: 1.3
KiCad E.D.A. 9.0.6		Id: 3/10

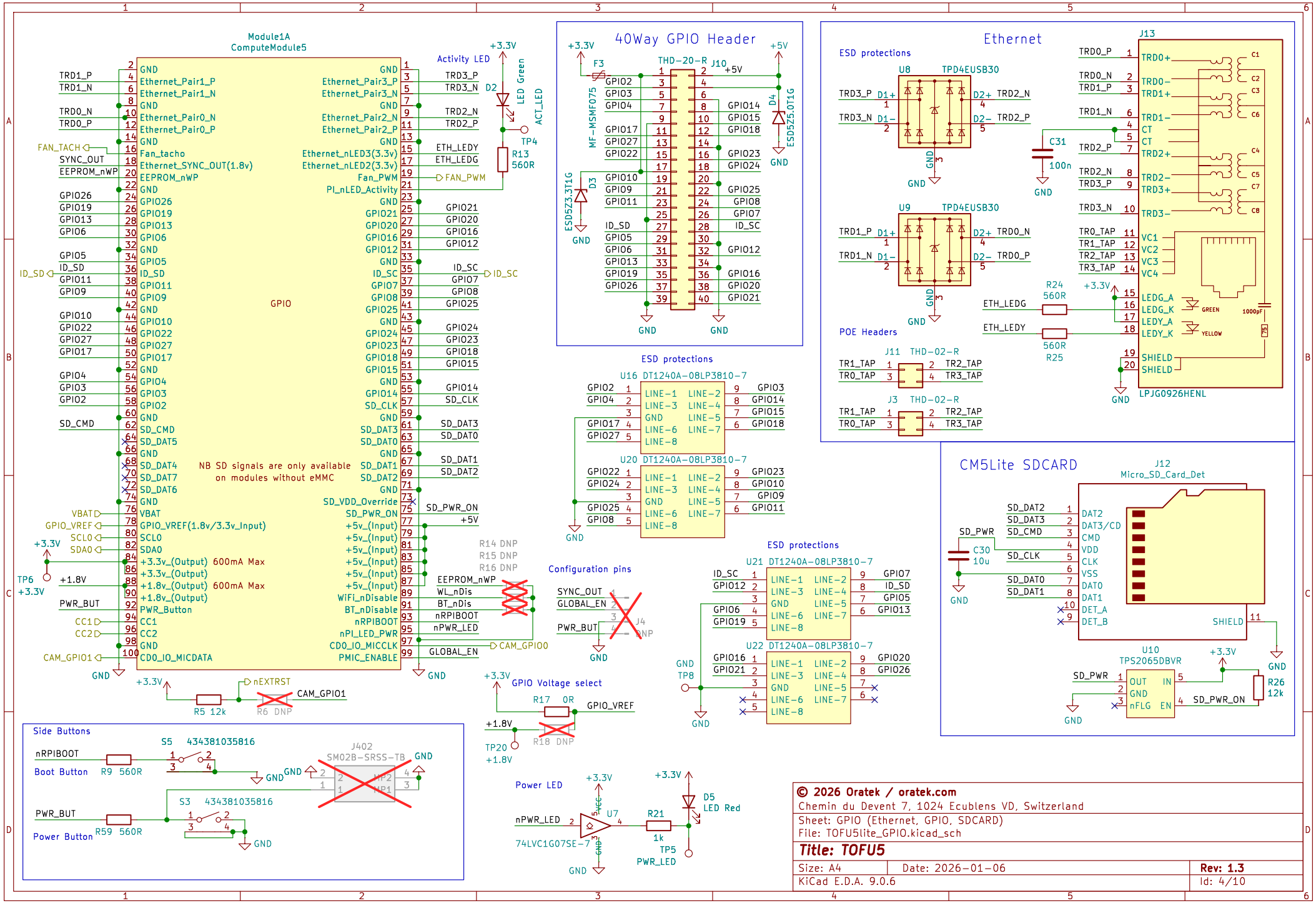

© 2026 Oratek / oratek.com
Chemin du Devent 7, 1024 Ecublens VD, Switzerland
Sheet: GPIO (Ethernet, GPIO, SDCARD)
File: TOFU5lite_GPIO.kicad_sch

Title: TOFU5

Size: A4	Date: 2026-01-06	Rev: 1.3
KiCad E.D.A. 9.0.6		Id: 4/10

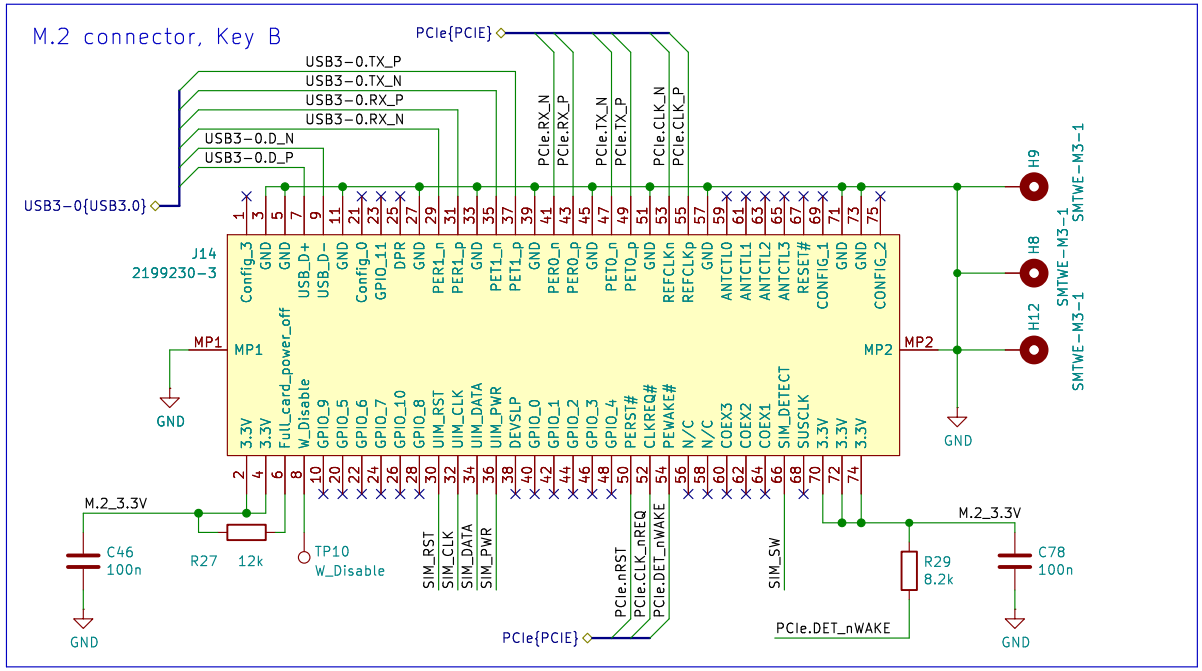

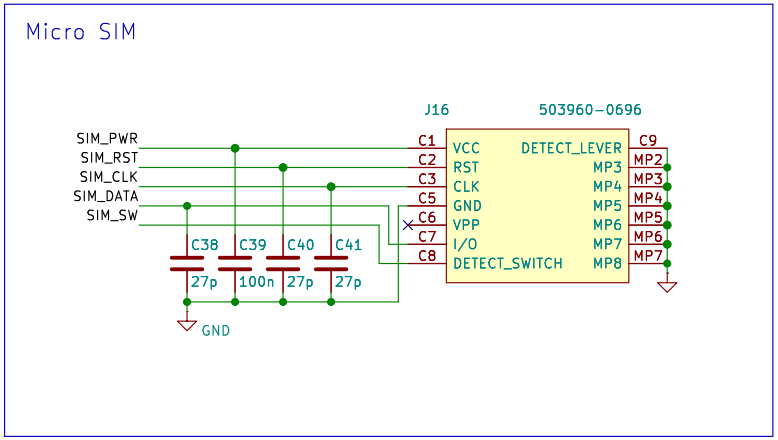

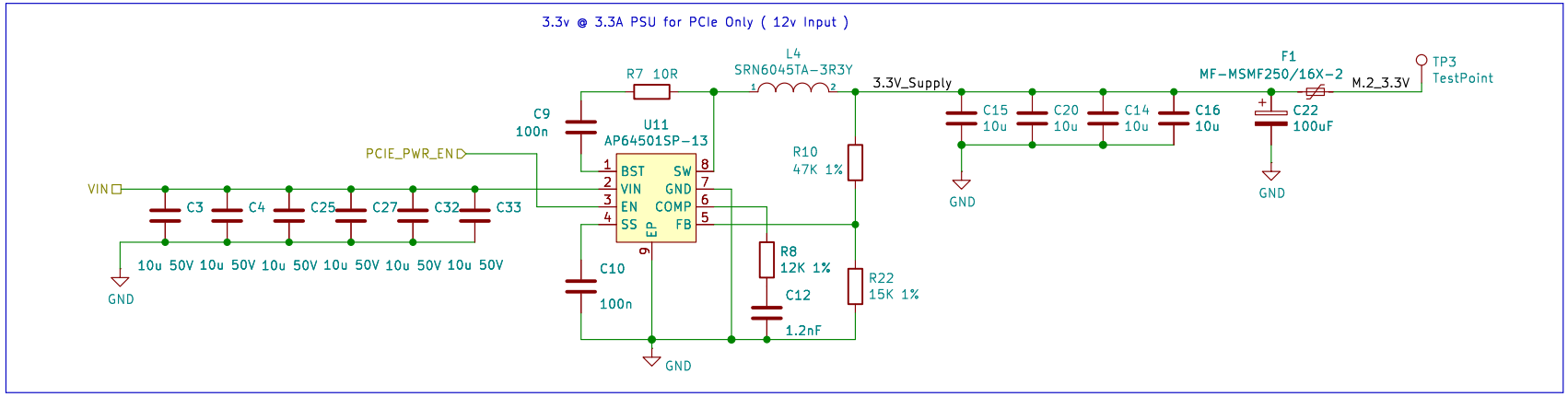

© 2026 Oratek / oratek.com
Chemin du Devent 7, 1024 Ecublens VD, Switzerland

Sheet: M.2_connector
File: TOFU5lite_M2-connectors.kicad_sch

Title: TOFU5

Size: A4	Date: 2026-01-06	Rev: 1.3
KiCad E.D.A. 9.0.6		Id: 5/10

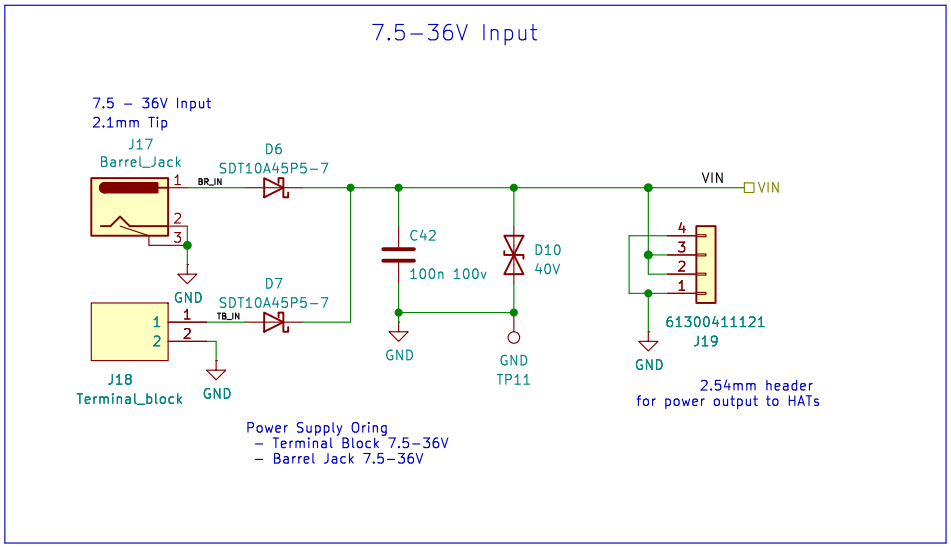

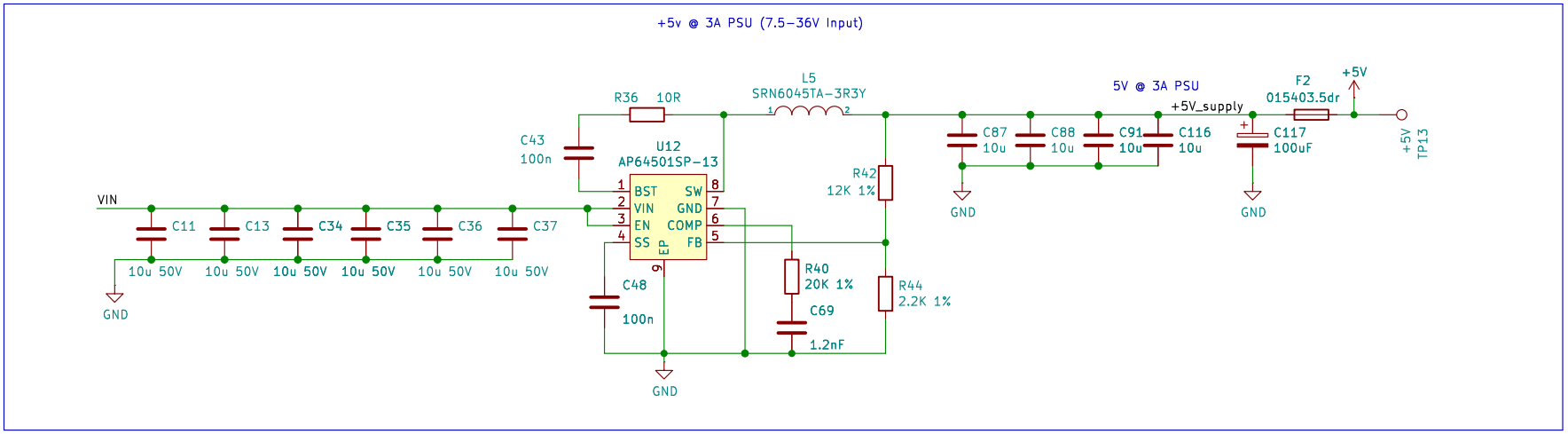

© 2026 Oratek / oratek.com
Chemin du Devent 7, 1024 Ecublens VD, Switzerland

Sheet: PSU
File: TOFU5lite_PSU.kicad_sch

Title: TOFU5

Size: A4	Date: 2026-01-06	Rev: 1.3
KiCad E.D.A. 9.0.6		Id: 6/10

RTC Battery connector

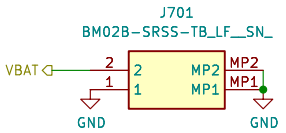

Fan connector on 5V or VIN

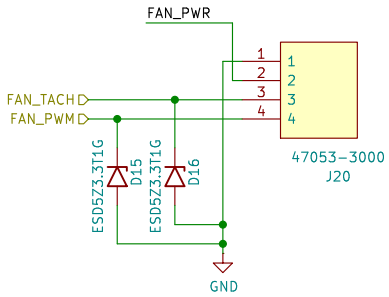

IMPORTANT: Check fan voltage with regards to Vin!

Configuration DIP switch

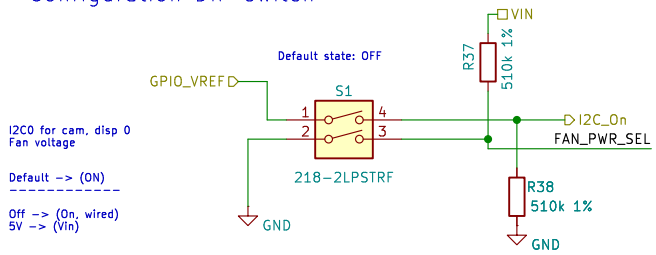

IMPORTANT: Check fan voltage before switching to Vin!

Fan Power Selection

- 5V (Default)
- Vin (Or highest voltage)

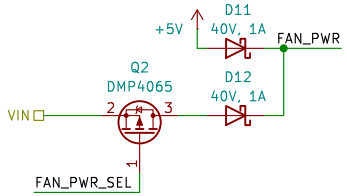

© 2026 Oratek / oratek.com
Chemin du Devent 7, 1024 Ecublens VD, Switzerland

Sheet: OnboardDevices
File: TOFU5lite_OnboardDevices.kicad_sch

Title: TOFU5

Size: A4	Date: 2026-01-06	**Rev: 1.3**
KiCad E.D.A. 9.0.6		Id: 7/10

USB-C Port

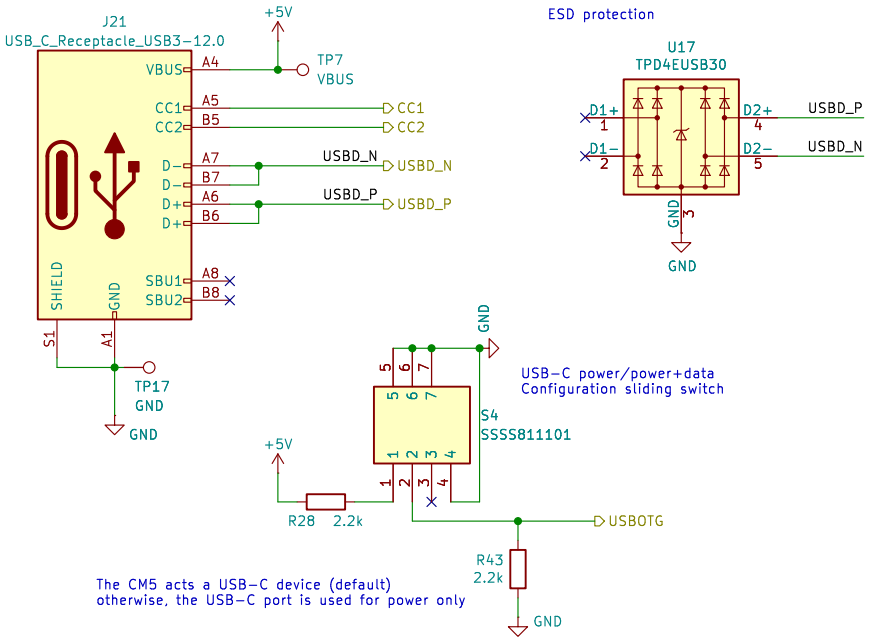

© 2026 Oratek / oratek.com
Chemin du Devent 7, 1024 Ecublens VD, Switzerland

Sheet: USB-C
File: TOFU5lite_USB-C.kicad_sch

Title: TOFU5

Size: A4	Date: 2026-01-06	Rev: 1.3
KiCad E.D.A. 9.0.6		Id: 8/10

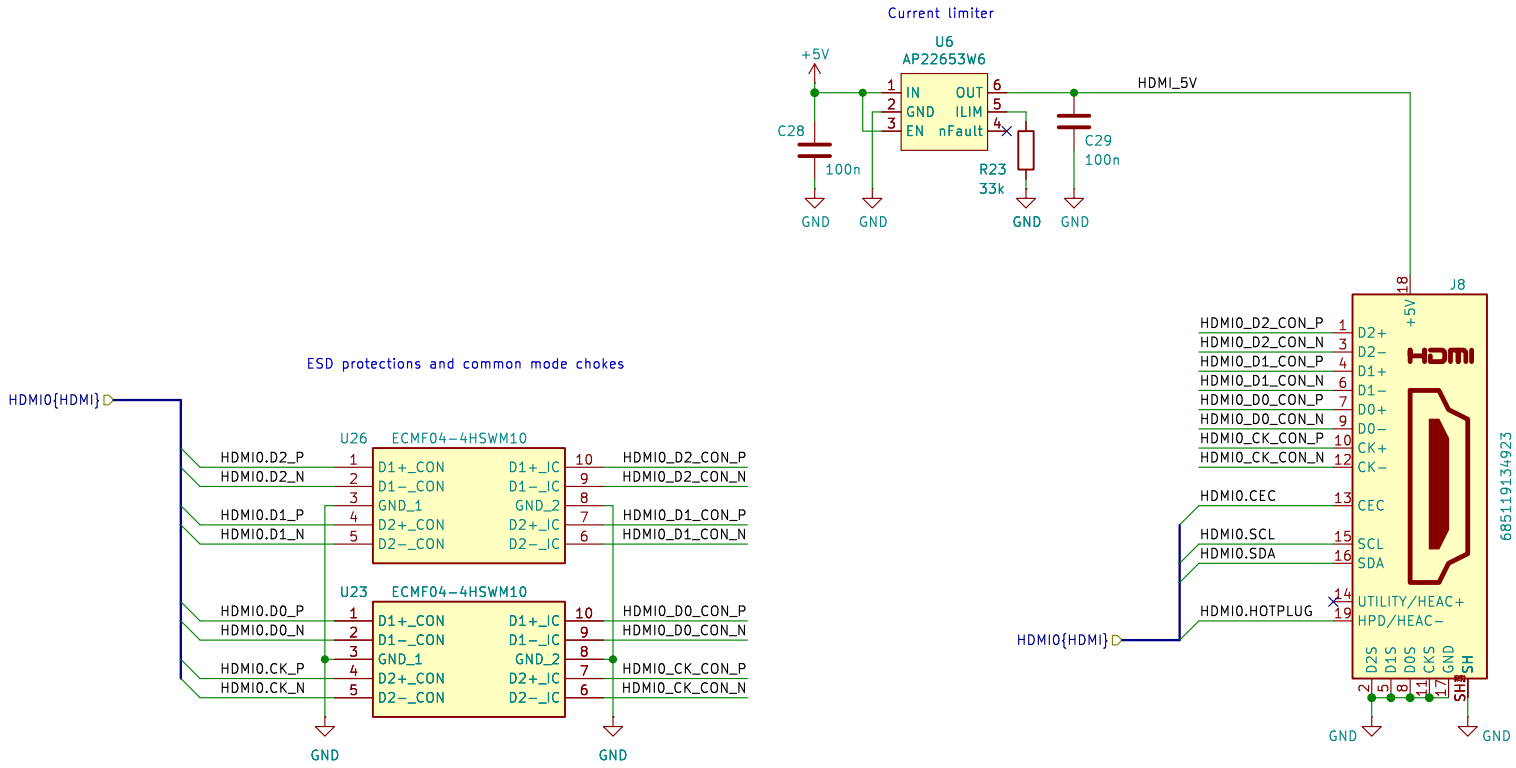

© 2026 Oratek / oratek.com
Chemin du Devent 7, 1024 Ecublens VD, Switzerland

Sheet: HDMI
File: TOFU5lite_HDMI.kicad_sch

Title: TOFU5

Size: A4	Date: 2026-01-06	Rev: 1.3
KiCad E.D.A. 9.0.6		Id: 9/10

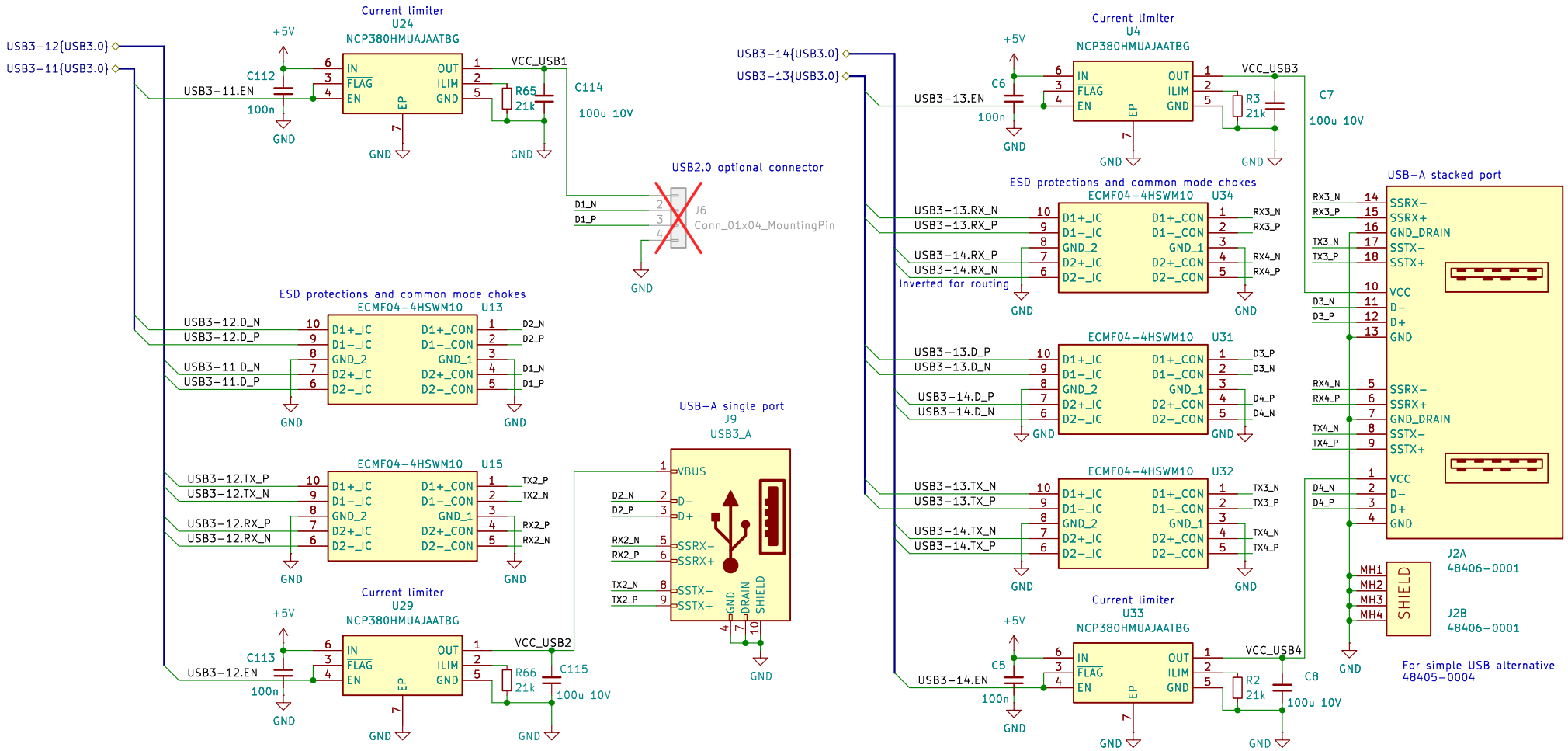

© 2026 Oratek / oratek.com
Chemin du Devent 7, 1024 Ecublens VD, Switzerland

Sheet: USB_connectors
File: TOFU5lite_USB-connectors.kicad_sch

Title: TOFU5

Size: A4	Date: 2026-01-06	Rev: 1.3
KiCad E.D.A. 9.0.6		Id: 10/10