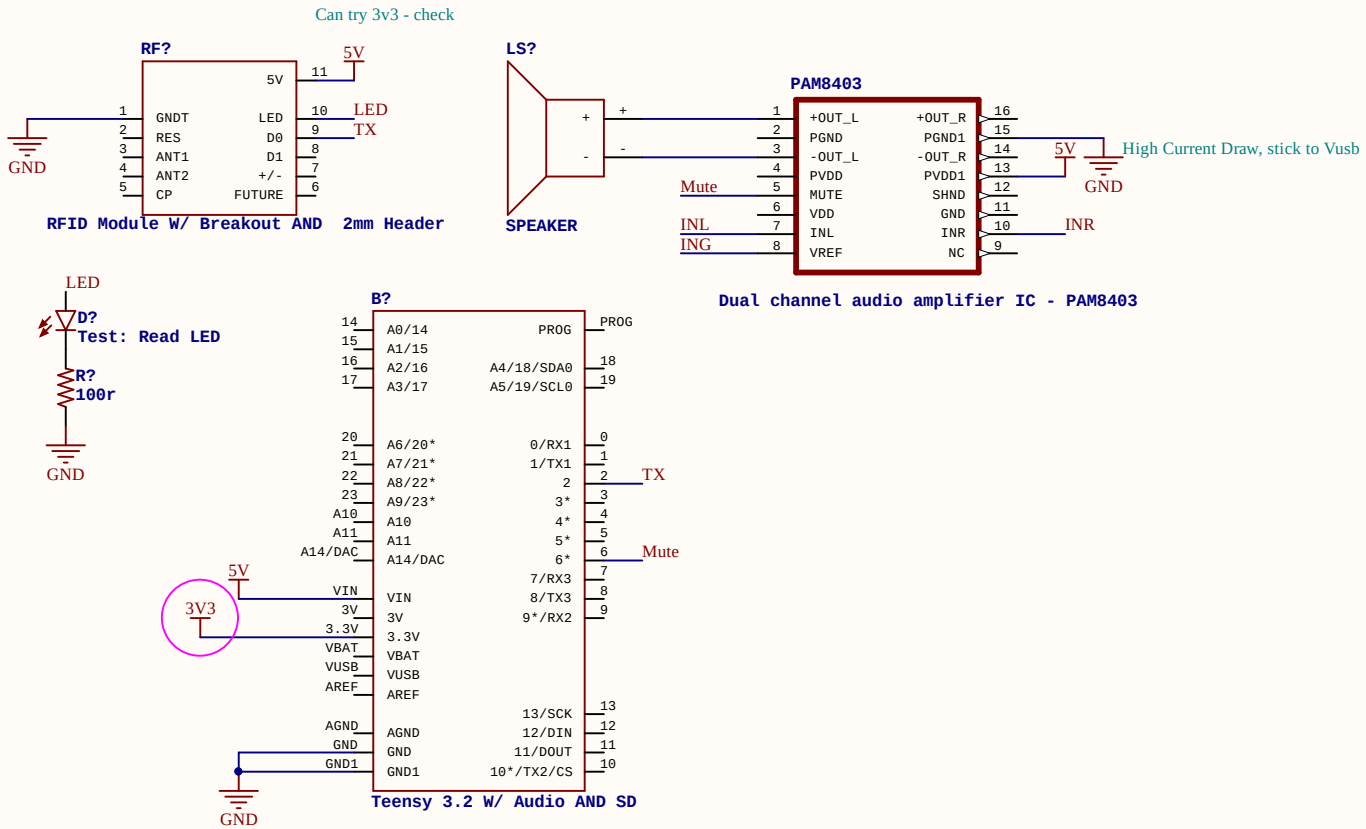

Title		
Size A4	Number	Revision
Date: 10/06/2017		Sheet of
File: D:\Stuff\..\RFID Schematic.SchDoc		Drawn By: