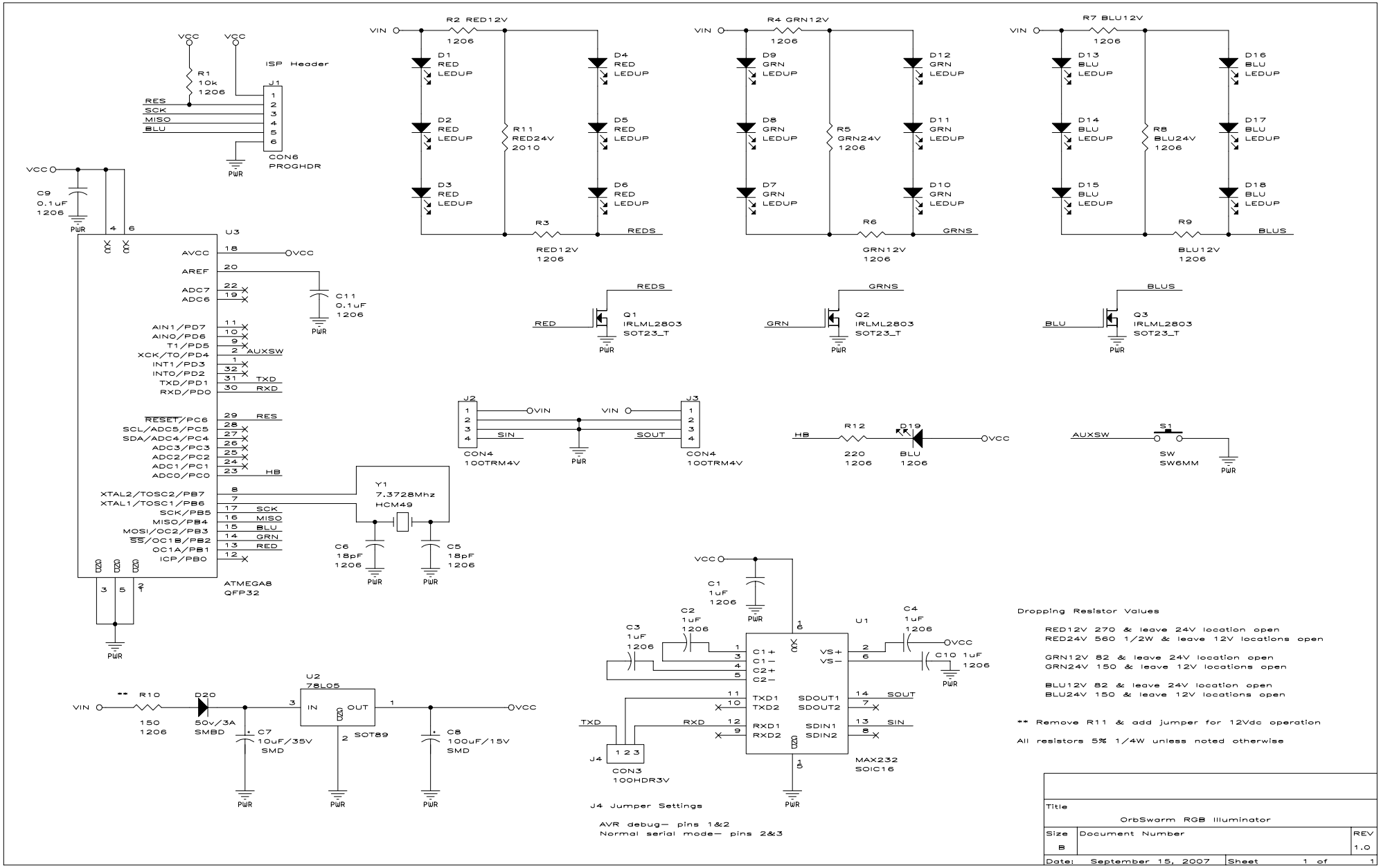
VCC
R1
10k
1206
ISP Header
J1
RES
SCK
MISO
BLU
CON6
PROGHDR
PWR
C9
0.1uF
1206
U3
AVCC
AREF
ADC7
ADC6
C11
0.1uF
1206
AIN1/PD7
AIN0/PD6
T1/PD5
XCK/T0/PD4
INT1/PD3
INT0/PD2
TXD/PD1
RXD/PD0
AUXSW
TXD
RXD
RESET/PC6
SCL/ADC5/PC5
SDA/ADC4/PC4
ADC3/PC3
ADC2/PC2
ADC1/PC1
ADC0/PC0
RES
HB
XTAL2/TOSC2/PB7
XTAL1/TOSC1/PB6
SCK/PB5
MISO/PB4
MOSI/OC2/PB3
SS/OC1B/PB2
OC1A/PB1
ICP/PB0
SCK
MISO
BLU
GRN
RED
ATMEGA8
QFP32
Y1
7.3728Mhz
HCM49
C6
18pF
1206
C5
18pF
1206
VIN
R2 RED12V
1206
D1
RED
LEDUP
D2
RED
LEDUP
D3
RED
LEDUP
D4
RED
LEDUP
D5
RED
LEDUP
D6
RED
LEDUP
R11
RED24V
2010
R3
RED12V
1206
REDS
R4 GRN12V
1206
D9
GRN
LEDUP
D8
GRN
LEDUP
D7
GRN
LEDUP
D12
GRN
LEDUP
D11
GRN
LEDUP
D10
GRN
LEDUP
R5
GRN24V
1206
R6
GRN12V
1206
GRNS
R7 BLU12V
1206
D13
BLU
LEDUP
D14
BLU
LEDUP
D15
BLU
LEDUP
D16
BLU
LEDUP
D17
BLU
LEDUP
D18
BLU
LEDUP
R8
BLU24V
1206
R9
BLU12V
1206
BLUS
Q1
IRLML2803
SOT23_T
Q2
IRLML2803
SOT23_T
Q3
IRLML2803
SOT23_T
J2
CON4
100TRM4V
SIN
J3
CON4
100TRM4V
SOUT
HB
R12
220
1206
D19
BLU
1206
AUXSW
S1
SW
SW6MM
** R10
150
1206
D20
50v/3A
SMBD
C7
10uF/35V
SMD
U2
78L05
IN
OUT
SOT89
C8
100uF/15V
SMD
C1
1uF
1206
C2
1uF
1206
C3
1uF
1206
C4
1uF
1206
U1
C1+
C1-
C2+
C2-
VS+
VS-
C10 1uF
1206
TXD1
TXD2
RXD1
RXD2
SDOUT1
SDOUT2
SDIN1
SDIN2
MAX232
SOIC16
J4
CON3
100HDR3V
TXD
RXD
J4 Jumper Settings
AVR debug— pins 1&2
Normal serial mode— pins 2&3
Dropping Resistor Values
RED12V 270 & leave 24V location open
RED24V 560 1/2W & leave 12V locations open
GRN12V 82 & leave 24V location open
GRN24V 150 & leave 12V locations open
BLU12V 82 & leave 24V location open
BLU24V 150 & leave 12V locations open
** Remove R11 & add jumper for 12Vdc operation
All resistors 5% 1/4W unless noted otherwise
Title
OrbSwarm RGB Illuminator
Size
B
Document Number
REV
1.0
Date: September 15, 2007
Sheet 1 of 1