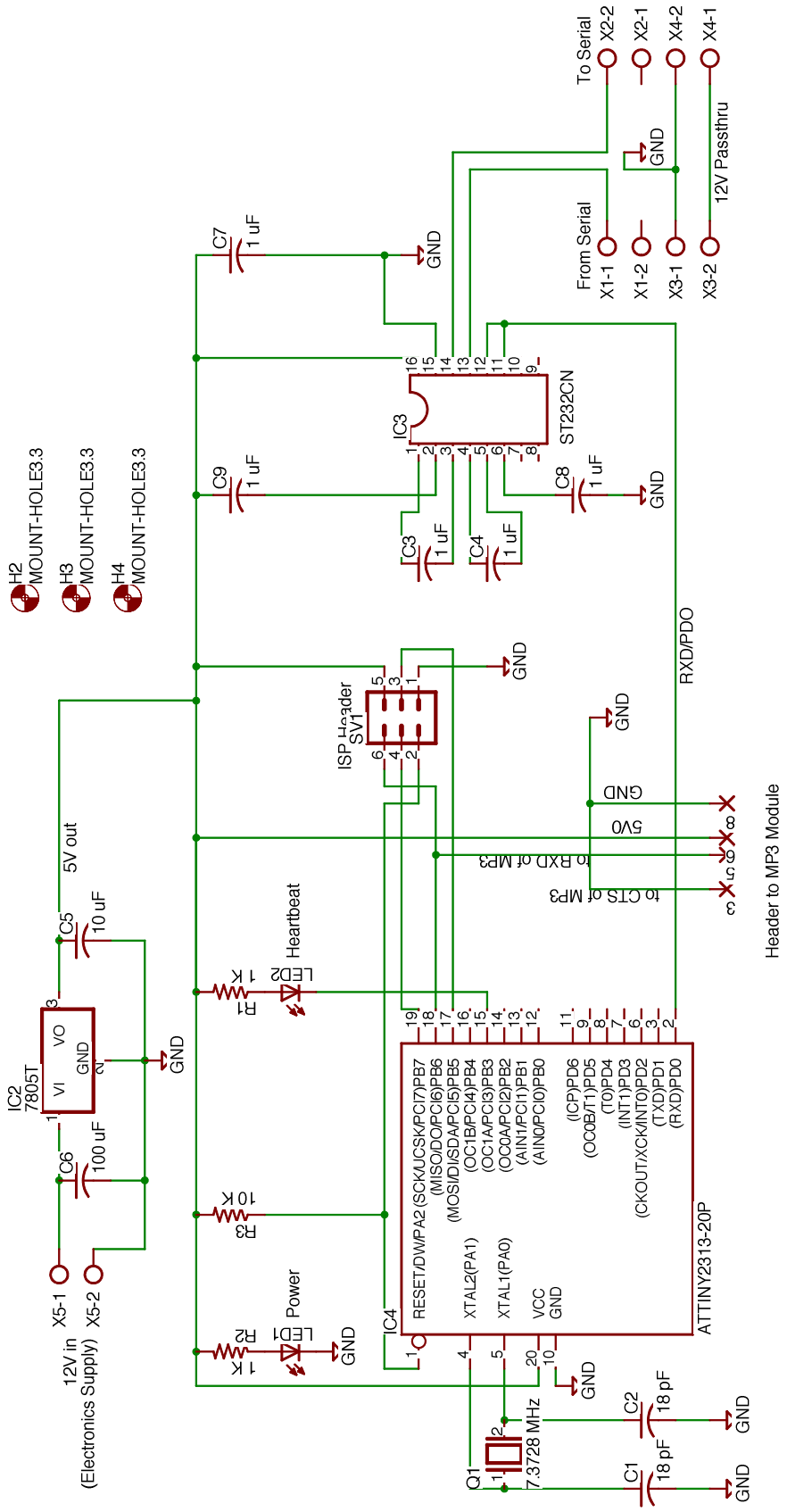
H2
MOUNT-HOLE3.3
H3
MOUNT-HOLE3.3
H4
MOUNT-HOLE3.3
IC2
7805T
VI
VO
GND
C5
10 uF
5V out
C6
100 uF
X5-1
X5-2
12V in
(Electronics Supply)
GND
R1
1 K
LED2
Heartbeat
R3
10 K
R2
1 K
LED1
Power
C7
1 uF
C9
1 uF
IC3
ST232CN
C3
1 uF
C4
1 uF
C8
1 uF
ISP Header
SV1
IC4
RESET/DW/PA2 (SCK/UCSK/PCI7)PB7
(MISO/DO/PCI6)PB6
(MOSI/DI/SDA/PCI5)PB5
(OC1B/PCI4)PB4
(OC1A/PCI3)PB3
(OC0A/PCI2)PB2
(AIN1/PCI1)PB1
(AIN0/PCI0)PB0
(ICP)PD6
(OC0B/T1)PD5
(T0)PD4
(INT1)PD3
(CKOUT/XCK/INT0)PD2
(TXD)PD1
(RXD)PD0
XTAL2(PA1)
XTAL1(PA0)
VCC
GND
ATTINY2313-20P
Q1
7.3728 MHz
C1
18 pF
C2
18 pF
To Serial
X2-2
X2-1
X4-2
X4-1
From Serial
X1-1
X1-2
X3-1
X3-2
12V Passthru
RXD/PDO
GND
5V0
to RXD of MP3
to CTS of MP3
Header to MP3 Module