**[B- (A+P)] [B+ (A-R)] [TAU8 B- (A+P)] [B+ [(A-R)] [TAU16 C-] [C+]**

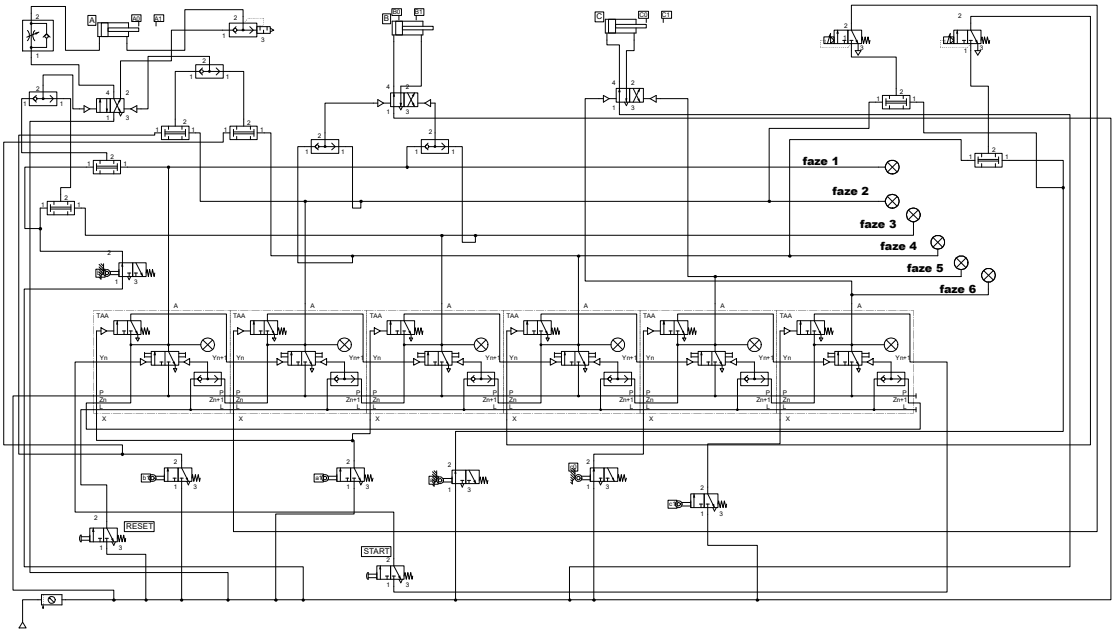


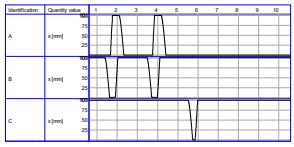


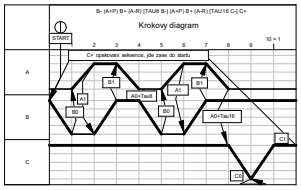


| Pos. No. | Identification | Location | Connector Labels | Target ID from | Target ID to | Description | Pos0 |
|---|---|---|---|---|---|---|---|
| 1 | A | /1.1 | | | | Double acting cylinder | |
| 2 | B | /1.1 | | | | Double acting cylinder | |
| 3 | C | /1.1 | | | | Double acting cylinder | |
| 4 | ?1 | /1.1 | | | | 3/2-way valve with pushbutton, normally closed | |
| 5 | ?15 | /1.1 | | | | 3/2-way valve with pushbutton, normally closed | |
| 6 | START | /1.1 | | | | 3/2-way valve with pushbutton, normally closed | |
| 7 | RESET | /1.1 | | | | 3/2-way valve with pushbutton, normally closed | |
| 8 | ?51 | /1.1 | | | | 3/2-way valve with pushbutton, normally closed | |
| 9 | ?55 | /1.1 | | | | 3/2-way valve with pushbutton, normally closed | |
| 10 | ?59 | /1.1 | | | | 3/2-way valve with pushbutton, normally closed | |
| 11 | ?581 | /1.1 | | | | Compressed air supply | |
| 12 | ?608 | /1.1 | | | | Air service unit, simplified representation | |
| 13 | ?60 | /1.1 | | | | 4/n Way Valve | |
| 14 | ?65 | /1.1 | | | | 4/n Way Valve | |
| 15 | ?70 | /1.1 | | | | 4/n Way Valve | |
| 16 | ?82 | /1.1 | | | | Two pressure valve | |
| 17 | ?4 | /1.1 | | | | Two pressure valve | |
| 18 | ?1494 | /1.1 | | | | Stepper module, type TAA | |
| 19 | ?16 | /1.1 | | | | Stepper module, type TAA | |
| 20 | ?27 | /1.1 | | | | Stepper module, type TAA | |
| 21 | ?42 | /1.1 | | | | Stepper module, type TAA | |
| 22 | ?90 | /1.1 | | | | Stepper module, type TAA | |
| 23 | ?1390 | /1.1 | | | | Pressure indicator | |
| 24 | ?122 | /1.1 | | | | Pressure indicator | |
| 25 | ?124 | /1.1 | | | | Pressure indicator | |
| 26 | ?126 | /1.1 | | | | Pressure indicator | |
| 27 | ?128 | /1.2 | | | | Pressure indicator | |
| 28 | ?1189 | /1.1 | | | | Pneumatic timer, normally closed | |
| 29 | ?117 | /1.2 | | | | Pneumatic timer, normally closed | |
| 30 | ?136 | /1.2 | | | | Two pressure valve | |
| 31 | ?140 | /1.1 | | | | Two pressure valve | |
| 32 | ?144 | /1.2 | | | | Pressure indicator | |
| 33 | ?1160 | /1.1 | | | | Two pressure valve | |
| 34 | ?118 | /1.1 | | | | Two pressure valve | |
| 35 | ?1147 | /1.1 | | | | Throttle check valve | |
| 36 | ?1175 | /1.1 | | | | Quick exhaust valve | 3 |
| 37 | ?150 | /1.1 | | | | 3/2-way valve with pushbutton, normally closed | |
| 38 | ?101 | /1.1 | | | | Stepper module, type TAA | |
| 39 | ?2 | /1.1 | | | | Shuttle valve | |
| 40 | ?112 | /1.1 | | | | Shuttle valve | |
| 41 | ?1168 | /1.1 | | | | Shuttle valve | |
| 42 | ?8 | /1.1 | | | | Shuttle valve | |