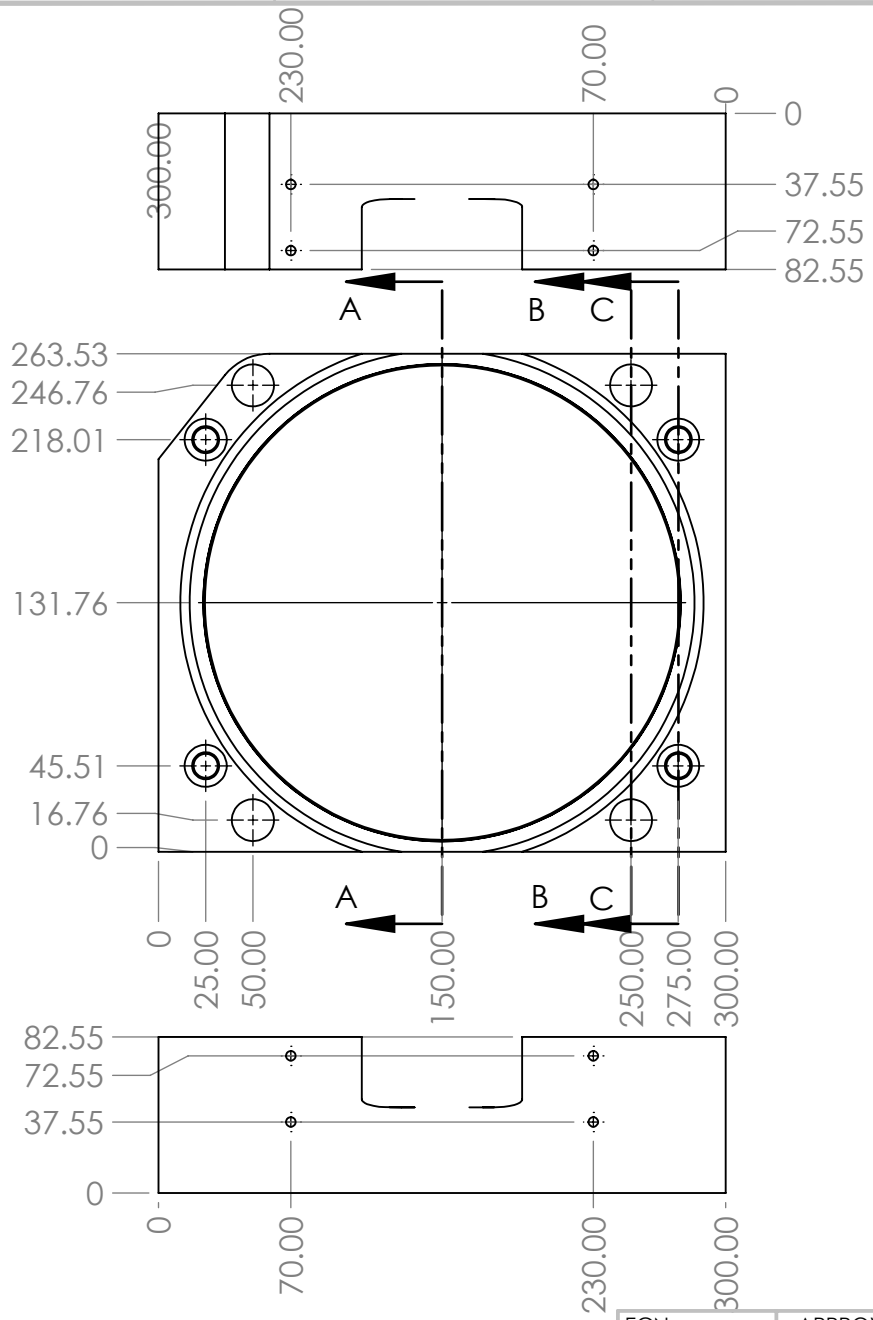

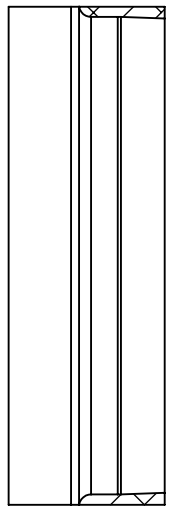

SECTION A-A
SCALE 1 : 4

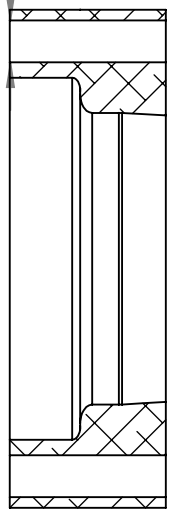

SECTION B-B
SCALE 1 : 4

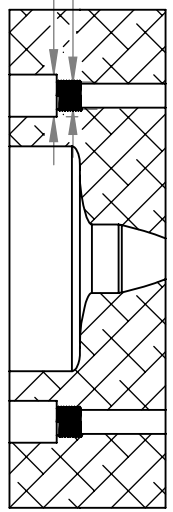

SECTION C-C
SCALE 1 : 4

FINISH:

DEBURR AND BREAK ALL SHARP EDGES

DO NOT SCALE DRAWING
UNLESS OTHERWISE SPECIFIED
DIMENSIONS ARE IN MILLIMETERS

DIMENSION	TOLERANCE
X.X	±0.1
X.XX	±0.05
ANGLE	±0.1°

GRYPHON RACING
GUELPH, ON

TITLE:
MOLD_SECTION_4

ECN:	APPROVAL	DATE	IN
DRAWN	OMM	02/09/19	
CHECKED			
CAPTAIN			

MATERIAL:
6061-T6 (SS)

WEIGHT: 4698.867

DWG NO.

REVISION

SCALE:1:5

SHEET 1 OF 2

A4

SOLIDWORKS Educational Product. For Instructional Use Only.