FRONT

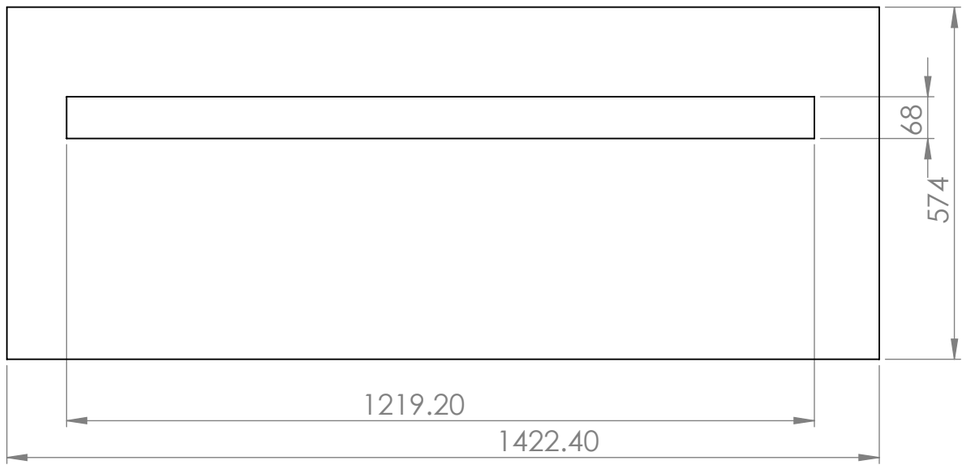

ISOMETRIC

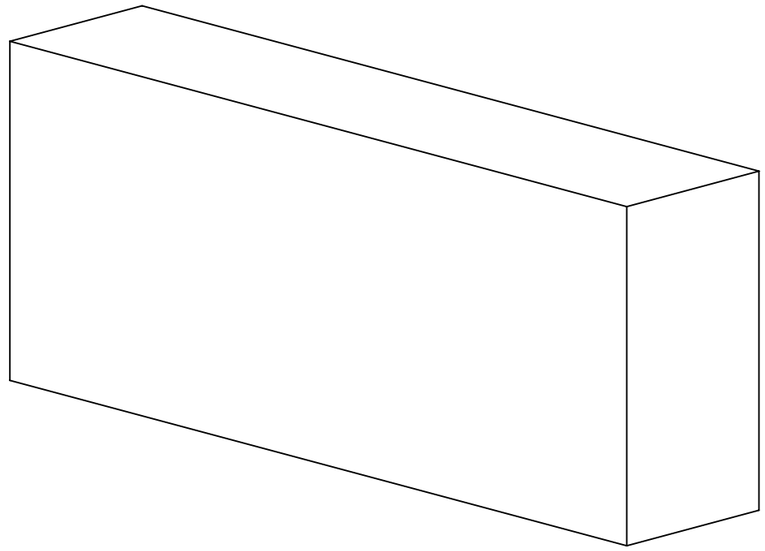

BOTTOM

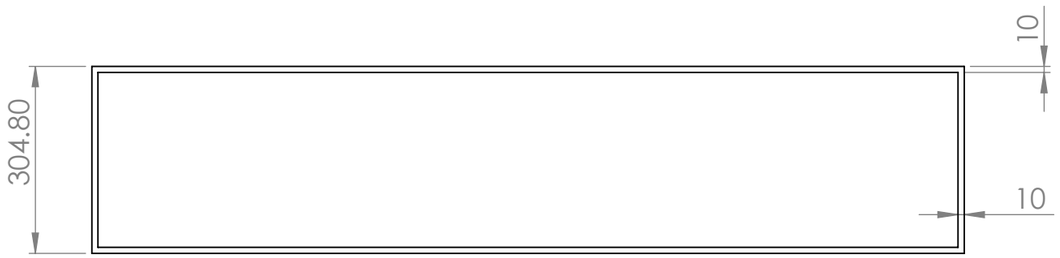

UNLESS OTHERWISE SPECIFIED: DIMENSIONS ARE IN MILLIMETERS SURFACE FINISH: TOLERANCES: LINEAR: ANGULAR:	FINISH:				DEBURR AND BREAK SHARP EDGES	DO NOT SCALE DRAWING / REVISION
	NAME	SIGNATURE	DATE			TITLE: Rear Box
DRAWN	Andrew Roberts					
CHK'D						
APPV'D						
MFG						
Q.A				MATERIAL:		DWG NO. box / A3
				WEIGHT:		SCALE:1:10 / SHEET 1 OF 1