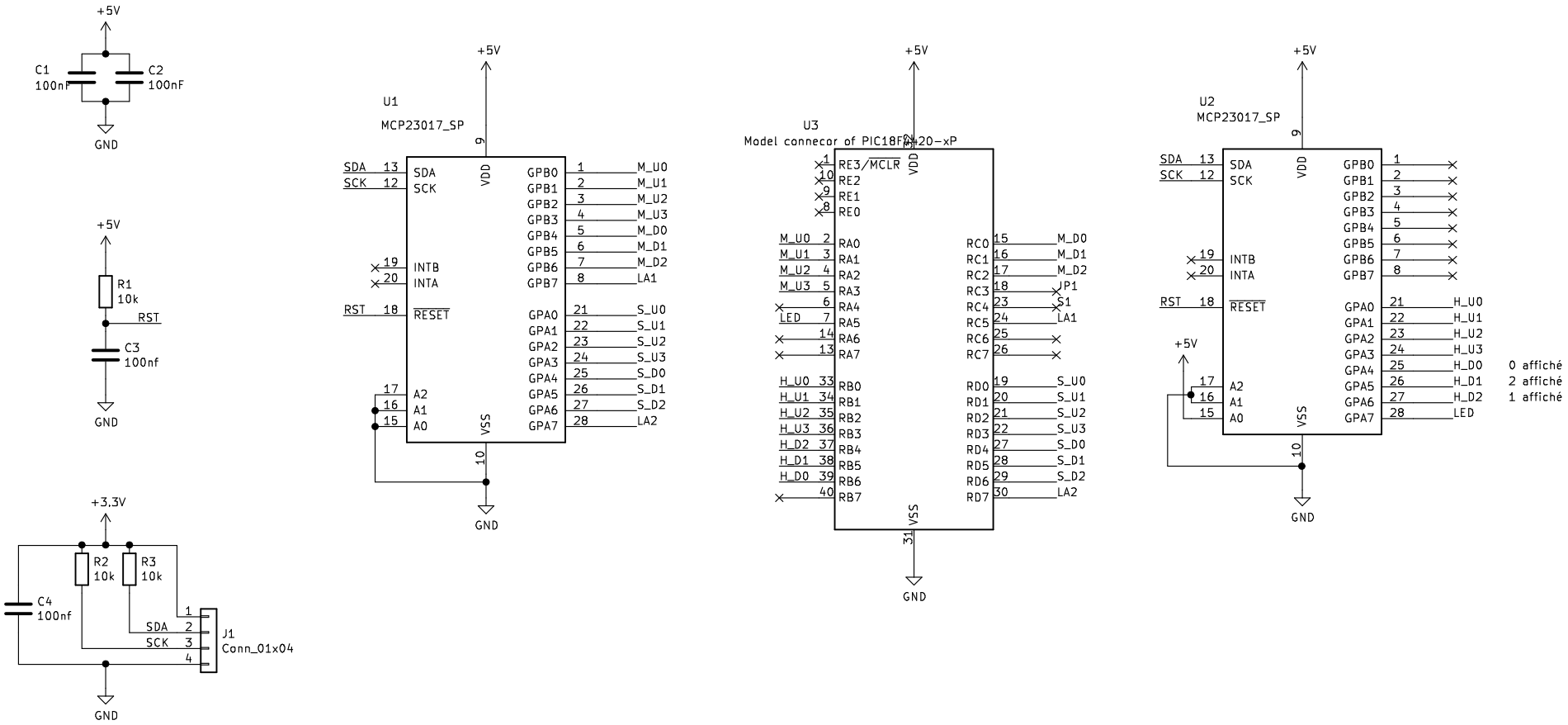

Sheet: /
File: Adaptateur_I2C.sch

Title: Adaptateur I2C to NIXIE

Size: A4	Date: 2021-09-06	**Rev: 1**
KiCad E.D.A. kicad 5.1.5+dfsg1-2build2		Id: 1/1