CSGE602055 Operating Systems
CSF2600505 Sistem Operasi
Week 02: Security, Protection, Privacy, & C-language

C. BinKadal

Sendirian Berhad

https://os.vlsm.org/Slides/os02.pdf
Always check for the latest revision!

REV414: Fri 25 Aug 2023 13:00

OS232[3]): Operating Systems Schedule 2023 - 2

Week	Topic[1])	OSC10[2])
Week 00	Overview (1), Assignment of Week 00	Ch. 1, 2
Week 01	Overview (2), Virtualization & Scripting	Ch. 1, 2, 18.
Week 02	Security, Protection, Privacy, & C-language.	Ch. 16, 17.
Week 03	File System & FUSE	Ch. 13, 14, 15.
Week 04	Addressing, Shared Lib, & Pointer	Ch. 9.
Week 05	Virtual Memory	Ch. 10.
Week 06	Concurrency: Processes & Threads	Ch. 3, 4.
Week 07	Synchronization & Deadlock	Ch. 6, 7, 8.
Week 08	Scheduling + W06/W07	Ch. 5.
Week 09	Storage, Firmware, Bootloader, & Systemd	Ch. 11.
Week 10	I/O & Programming	Ch. 12.

[1]) For schedule, see https://os.vlsm.org/#idx02

[2]) Silberschatz et. al.: **Operating System Concepts**, 10th Edition, 2018.

[3]) This information will be on **EVERY** page two (2) of this course material.

STARTING POINT — https://os.vlsm.org/

- **Text Book** — Any recent/decent OS book. Eg. (**OSC10**) Silberschatz et. al.: **Operating System Concepts**, 10th Edition, 2018. (See https://www.os-book.com/OS10/).
- **Resources** (https://os.vlsm.org/#idx03)
  - **SCELE OS232** — https://scele.cs.ui.ac.id/course/view.php?id=3614. The enrollment key is **XXX**.
  - **Download Slides and Demos from GitHub.com** — (https://github.com/os2xx/os/) os00.pdf (W00), os01.pdf (W01), os02.pdf (W02), os03.pdf (W03), os04.pdf (W04), os05.pdf (W05), os06.pdf (W06), os07.pdf (W07), os08.pdf (W08), os09.pdf (W09), os10.pdf (W10).
  - **Problems** 195.pdf (W00), 196.pdf (W01), 197.pdf (W02), 198.pdf (W03), 199.pdf (W04), 200.pdf (W05), 201.pdf (W06), 202.pdf (W07), 203.pdf (W08), 204.pdf (W09), 205.pdf (W10).
  - **LFS** — http://www.linuxfromscratch.org/lfs/view/stable/
  - **OSP4DISS** — https://osp4diss.vlsm.org/
  - **This is How Me Do It!** — https://doit.vlsm.org/
    - PS: "Me" rhymes better than "I", duh!

Agenda

1. Start
2. OS232 Schedule
3. Agenda
4. Week 02 Security & Protection
5. OSC10 (Silberschatz) Chapter 16 and 17
6. Cyber Security Introduction
7. Protection & Security Design
8. The Security Problem
9. Protection
10. Privacy
11. C Language
12. Week 02: Summary
13. The End

Week 02 Security & Protection: Topics[1]

- Overview of system security
- Cyber Security Introduction
- Policy/mechanism separation
- Security methods and devices
- Protection, access control, and authentication
- Backups
- Safety and Privacy
- Threads
- Cryptography: (Symmetric and Asymmetric) Encryption,
- C Language

[1] Source: ACM IEEE CS Curricula

Week 02 Security & Protection: Learning Outcomes[1]

- Articulate the need for protection and security in an OS (cross-reference IAS/Security Architecture and Systems Administration/Investigating Operating Systems Security for various systems). [Assessment]
- Summarize the features and limitations of an operating system used to provide protection and security [Familiarity]
- Explain the mechanisms available in an OS to control access to resources [Familiarity]
- Carry out simple system administration tasks according to a security policy, for example creating accounts, setting permissions, applying patches, and arranging for regular backups [Usage]

[1] Source: ACM IEEE CS Curricula

OSC10 (Silberschatz) Chapter 16: Security and Chapter 17: Protection

- OSC10 Chapter 16
  - The Security Problem
  - Program Threats
  - System and Network Threats
  - Cryptography as a Security Tool
  - User Authentication
  - Implementing Security Defenses
  - Firewalling to Protect Systems and Networks
  - Computer-Security Classifications
  - An Example: Windows 7
- OSC10 Chapter 17
  - Goals of Protection
  - Principles of Protection
  - Protection Rings
  - Domain of Protection
  - Access Matrix
  - Implementation of Access Matrix
  - Revocation of Access Rights
  - Role-based Access Control
  - Mandatory Access Control (MAC)
  - Capability-Based Systems
  - Other Protection Implementation Methods
  - Language-based Protection

Cyber Security Introduction

Visit:

- https://youtu.be/rcDO8km6R6c
- https://youtu.be/CivG_2UqKMg (Corporate Culture/the first 30 minutes).
  - Point of Cybersecurity
  - Good Administration
  - Zero Trust Environment
  - Succesful Security Attack
  - Potential Security Threats
  - Security Problems
  - Disaster Recovery
  - Employee Security Policy
  - Corporate Culture

Protection & Security Design

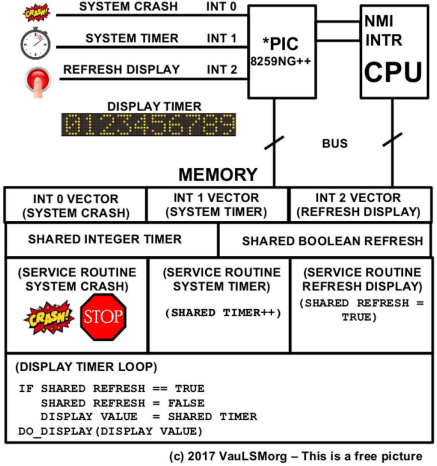

Figure: How to protect and secure this design?

The Security Problem

- **OSC10**:
  - **Security** is a measure of confidence that the integrity of a system and its data will be preserved.
  - **Protection** is the set of mechanisms that control the access of processes and users to the resources defined by a computer system.
- Secure System, Intruders, Threat, Attack.
- Security Violation Categories: Breach of (confidentiality, integrity, availability), theft of service, DOS.
- Security Violation Methods: Masquerading, Replay attack, Human-in-the-middle attack, Session hijacking, Privilege escalation.
- Security Measure Levels: Physical, Network, Operating System, Application.
- Program, System, and Network Threats
  - Social Engineering: Phishing.
  - Security Hole: Code Review.
  - Principle of least privilege.

The Security Problem (cont)

- Threats: Malware, Trojan Horse, Spyware, Ransomware, Trap (back) Door, Logic Bomb, Code-injection Attack, Overflow, Script Kiddie.
- Viruses: Virus Dropper, Virus Signature, Keystroke Logger.
- Worm, Sniffing, Spoofing, Port Scanning, DOS (Denial of Service).
- Cryptography: (Symmetric and Asymmetric) Encryption, Public/Private Key Pairs, Key Distribution, Digital Certificate.
- User Authentication:
  - Password: One Time Password, Two-Factor Authentication,
  - Biometrics.
- Implementing Security Defenses: Policy, Assesment, Prevention, Detection, Protection, Auditing.
- Linux Security
- gnupg & sha1sum

Protection

- Principle of Least Privilege
- Domain Structure and Access Matrix
- ACL: Access Control List
  - Domain = set of Access-rights (eg. **user-id**).
  - Access-right = <object-name, rights-set> (eg. object: file).

	File1	File2	File3	Printer
User1	Read		Read	
User2				Print
User3		Read	Execute	Print
User4	R/W		R/W	Print

- Access-right Plus Domain (Users) as Objects

	F1	F2	F3	Printer	U1	U2	U3	U4
U1	R		R			SW		
U2				Print			SW	SW
U3		R	EXEC	Print				
U4	R/W		R/W	Print	SW			

Copy Rights

- Start

	File1	File2	File3
User1	Exec		Write*
User2	Exec	Read*	Exec
User3	Exec		

- User3: Read access to File2 (by User2)

	File1	File2	File3
User1	Exec		Write*
User2	Exec	Read*	Exec
User3	Exec	**Read**	

- Owner Rights

	File1	File2	File3
User1	O & E		W
User2		O & R* & W*	O & R* & W
User3		W	W

Privacy (Wikipedia)

- Privacy can mean different things in different contexts; different people, cultures, and nations have different expectations about how much privacy a person is entitled to or what constitutes an invasion of privacy.
- Considering all discussions as one of these concepts
  - Right to be let alone (such as one's own home).
  - Limited access (no information collection).
  - Control over information (in the era of big data).
  - States of privacy: solitude, intimacy, anonymity, and reserve.
  - Secrecy: does not apply for any already publicly disclosed.
  - Personhood and autonomy.
  - Self-identity and personal growth.

Beginner's Guide to Internet Safety & Privacy

- The Beginner's Guide to Digital Privacy — YouTube.
- The Beginner's Guide To Online Privacy — LINK.
- The Beginner's Guide To Internet Safety and Privacy — LINK.
  - Who Are You Protecting Yourself From?
    - Governments
    - ISPs
    - (H)Crackers
    - Trackers
    - Advertisers/Malwertisers
  - Which Information Should You Keep Private?
    - Metadata
    - Personal Information
    - Passwords
    - Financial Data
    - Medical Records
    - History
    - Communication

C Language

- Reference: (Any C Language Tutorial)
- Visit https://github.com/os2xx/os/tree/master/Demos/

Week 02: Summary

- Reference: OSC10 chapter 16, 17.
- Goals of Protection
- Domain and Access Matrix
- ACL: Access Control List
- The Security Problem
- Threats: Trojan Horse, Trap Door, Overflow, Viruses, Worms, Port Scanning, DOS (Denial of Service).
- Cryptography: (Symmetric and Asymmetric) Encryption,
- User Authentication: Password, Biometrics.
- Implementing Security Defenses: Policy, Assesment, Prevention, Detection, Protection, Auditing.
- Privacy.

The End

- ☐ This is the end of the presentation.
- ☒ This is the end of the presentation.
- This is the end of the presentation.