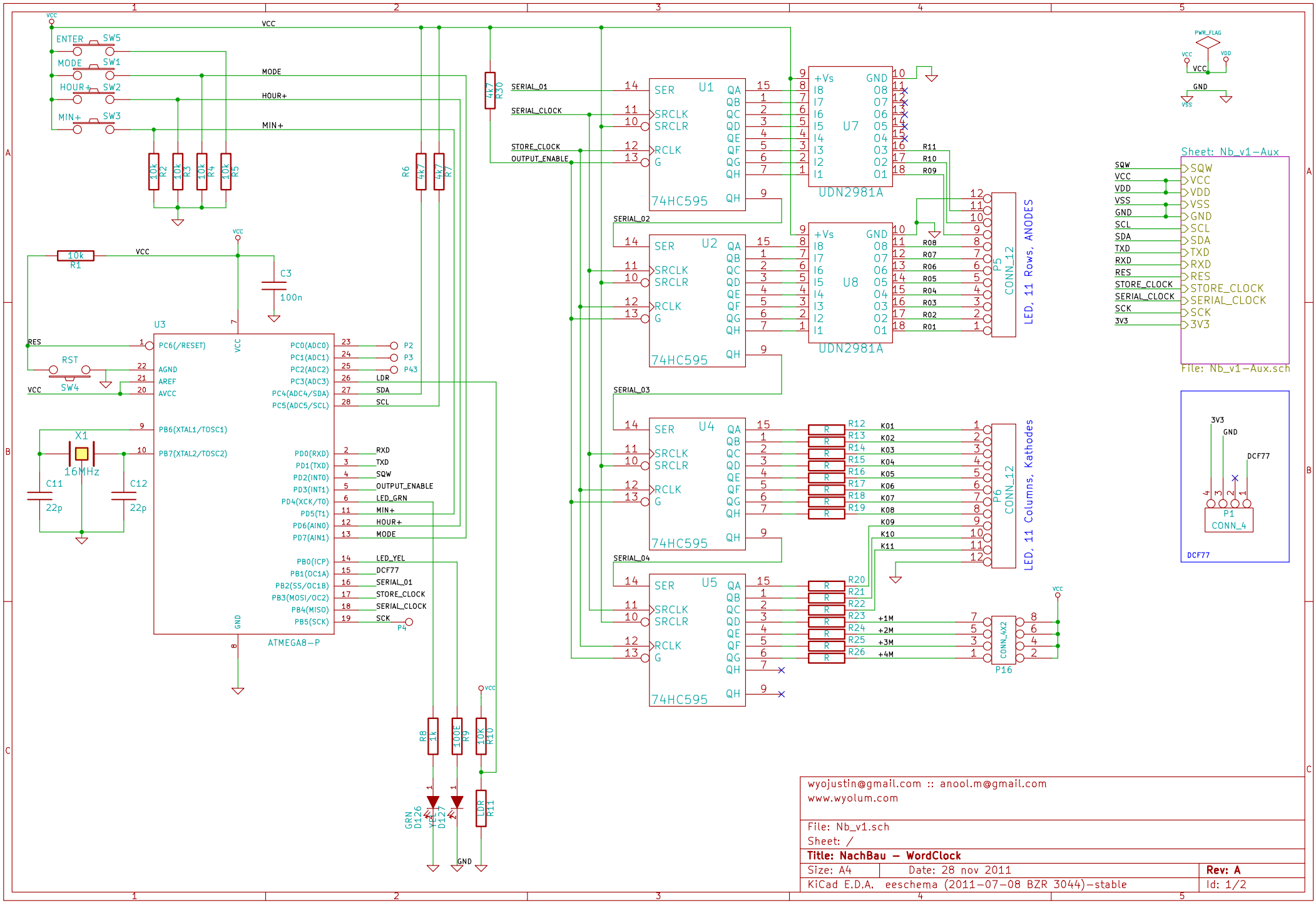

wyojustin@gmail.com :: anool.m@gmail.com
www.wyolum.com

File: Nb_v1.sch
Sheet: /

Title: NachBau – WordClock

Size: A4	Date: 28 nov 2011	**Rev: A**
KiCad E.D.A. eeschema (2011-07-08 BZR 3044)-stable		Id: 1/2

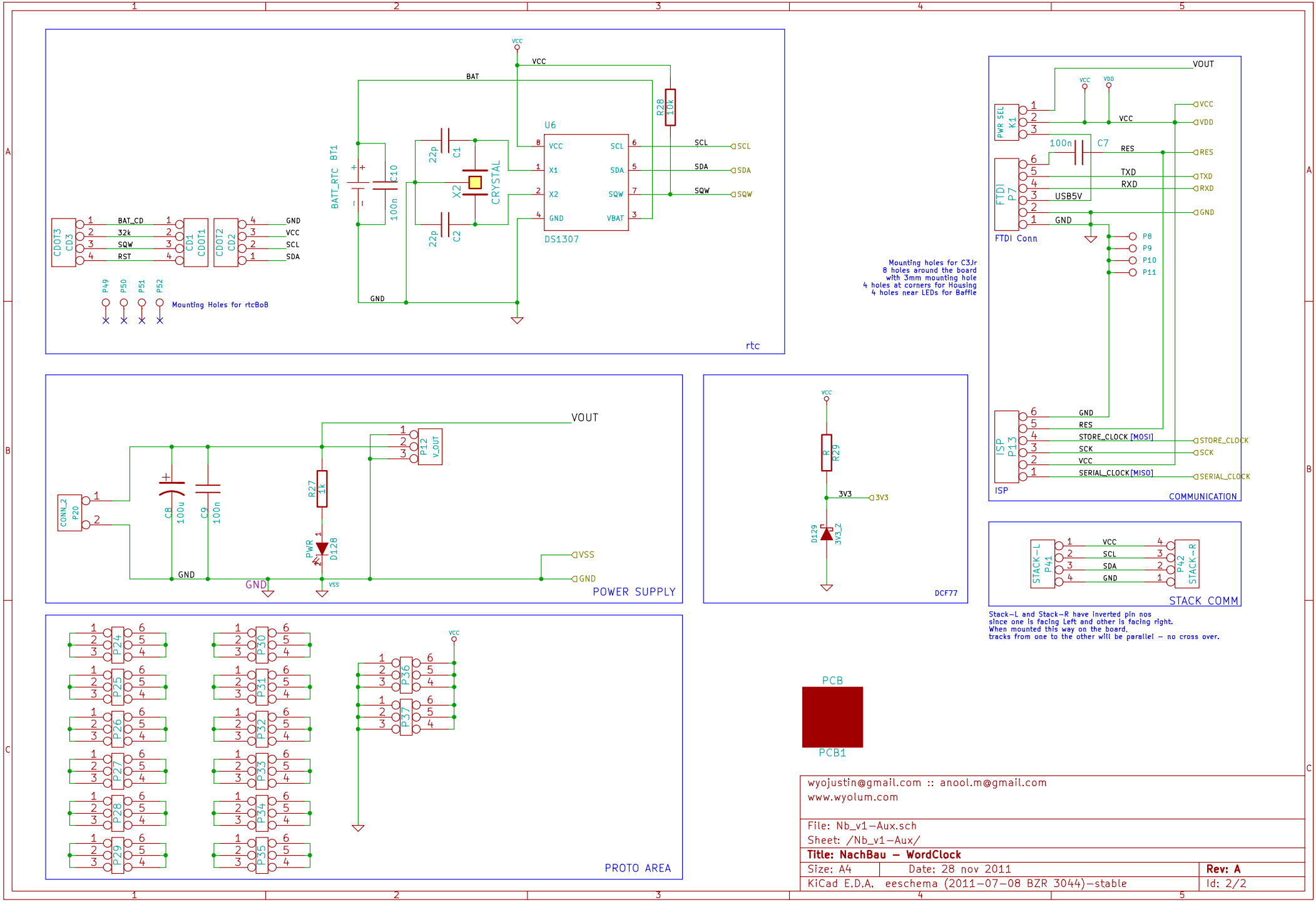

wyojustin@gmail.com :: anool.m@gmail.com
www.wyolum.com

File: Nb_v1-Aux.sch
Sheet: /Nb_v1-Aux/

Title: NachBau - WordClock

Size: A4	Date: 28 nov 2011	**Rev: A**
KiCad E.D.A. eeschema (2011-07-08 BZR 3044)-stable		Id: 2/2