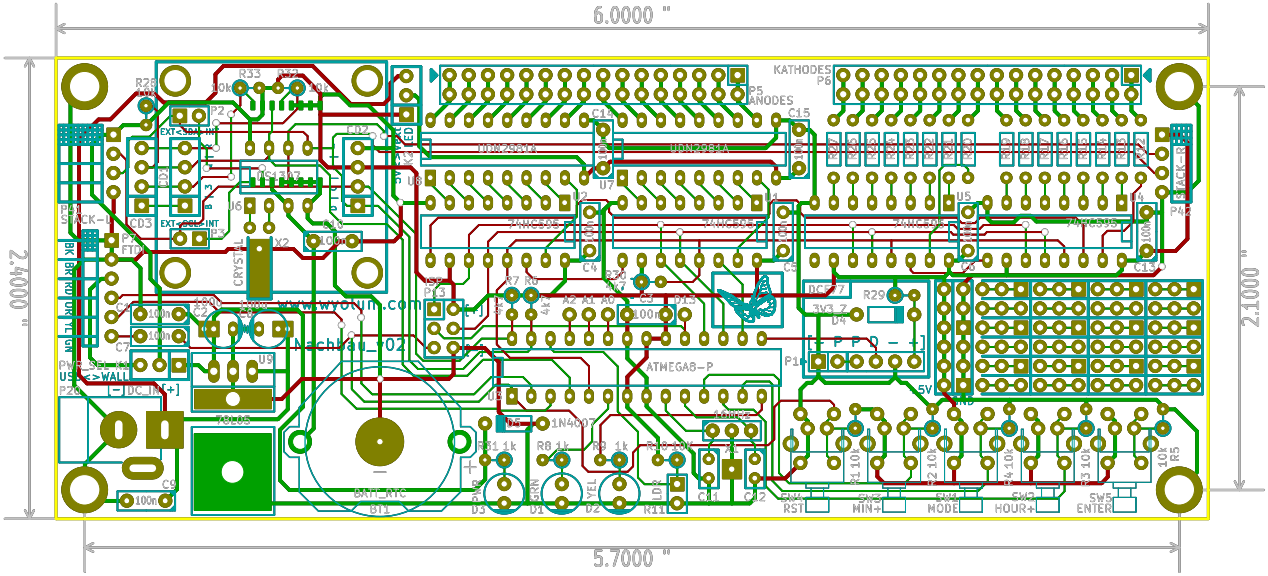
6.0000 "
2.4000 "
2.1000 "
5.7000 "
KATHODES
ANODES
74HC595
74HC165
ATMEGA8-P
CRYSTAL
BATTERY
1N4007
RST
MIN+
MODE
HOUR+
ENTER
www.wyolum.com
Nachlaw_02