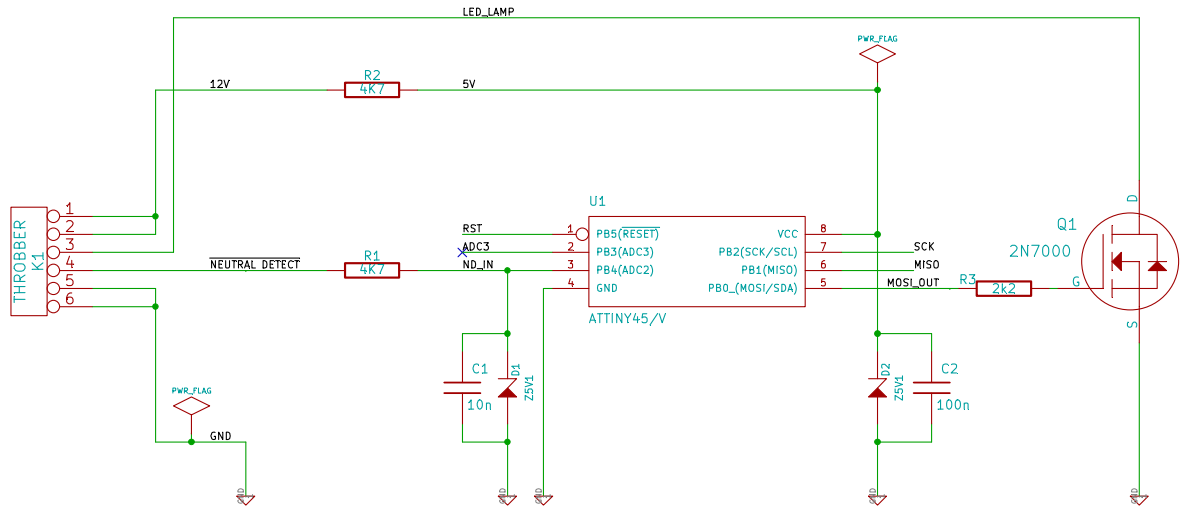

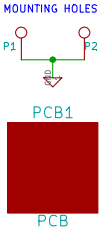

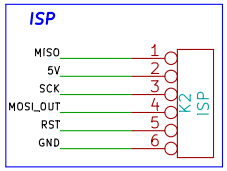

www.wyolum.com

WyoLum

File: Throbber.sch

Sheet: /

Title: Throbber – Bike Neutral Indicator

Size: A4	Date: 19 jun 2012	**Rev: A**
KiCad E.D.A. eeschema (2011-12-28 BZR 3254)-stable		Id: 1/1