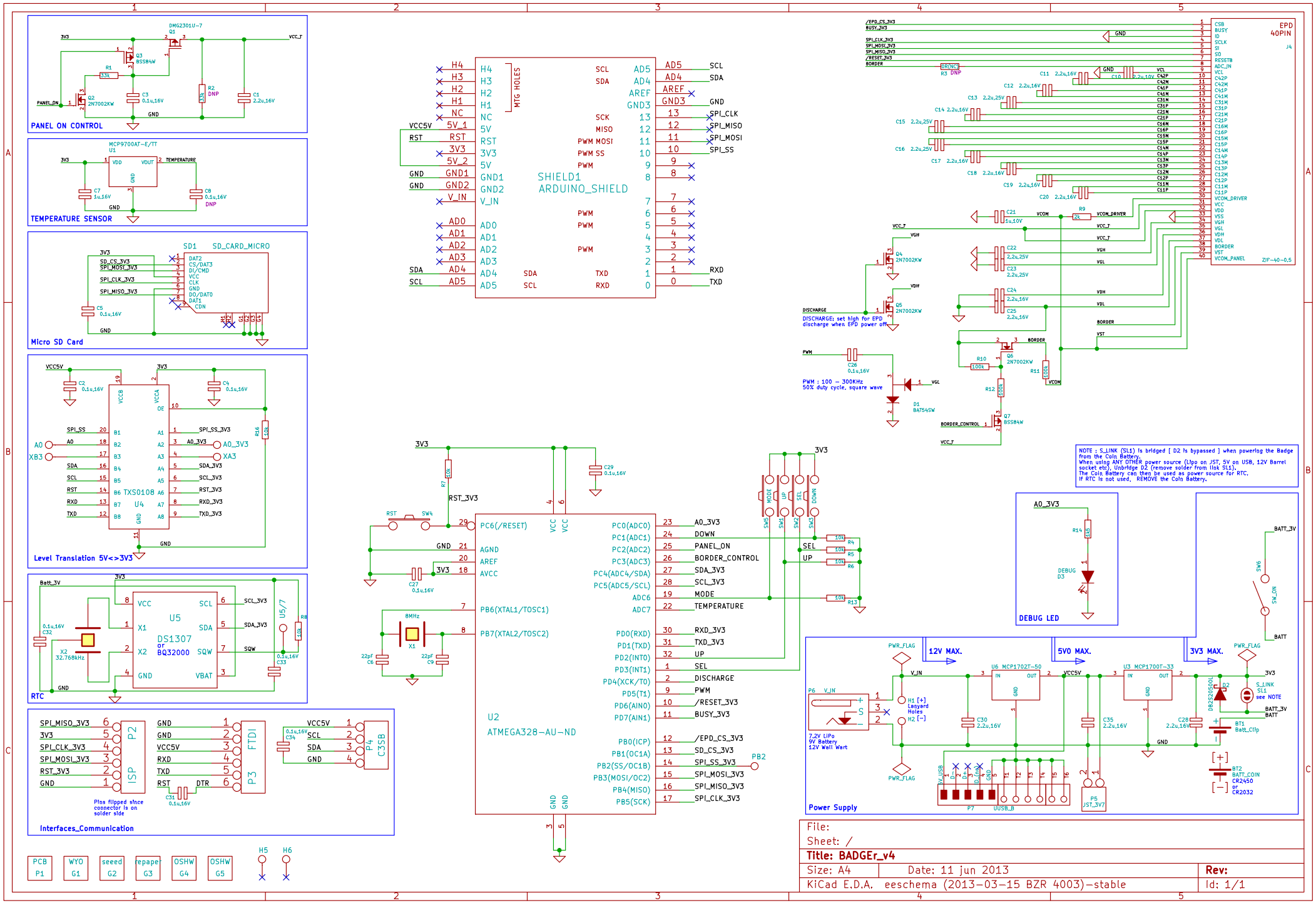
PANEL ON CONTROL
TEMPERATURE SENSOR
Micro SD Card
Level Translation 5V<>3V3
RTC
Interfaces_Communication
SHIELD1
ARDUINO_SHIELD
MTG HOLES
EPD
40PIN
DISCHARGE: set high for EPD discharge when EPD power off
PWM : 100 – 300KHz
50% duty cycle, square wave
NOTE : S_LINK (SL1) is bridged [D2 is bypassed] when powering the Badge from the Coin Battery.
When using ANY OTHER power source (LiPo on JST, 5V on USB, 12V Barrel socket etc), Unbridge D2 (remove solder from link SL1).
The Coin Battery can then be used as power source for RTC.
If RTC is not used, REMOVE the Coin Battery.
DEBUG LED
Power Supply
12V MAX.
5V0 MAX.
3V3 MAX.
ATMEGA328-AU-ND
U2
File:
Sheet: /
Title: BADGEr_v4
Size: A4
Date: 11 jun 2013
Rev:
KiCad E.D.A. eeschema (2013-03-15 BZR 4003)-stable
Id: 1/1