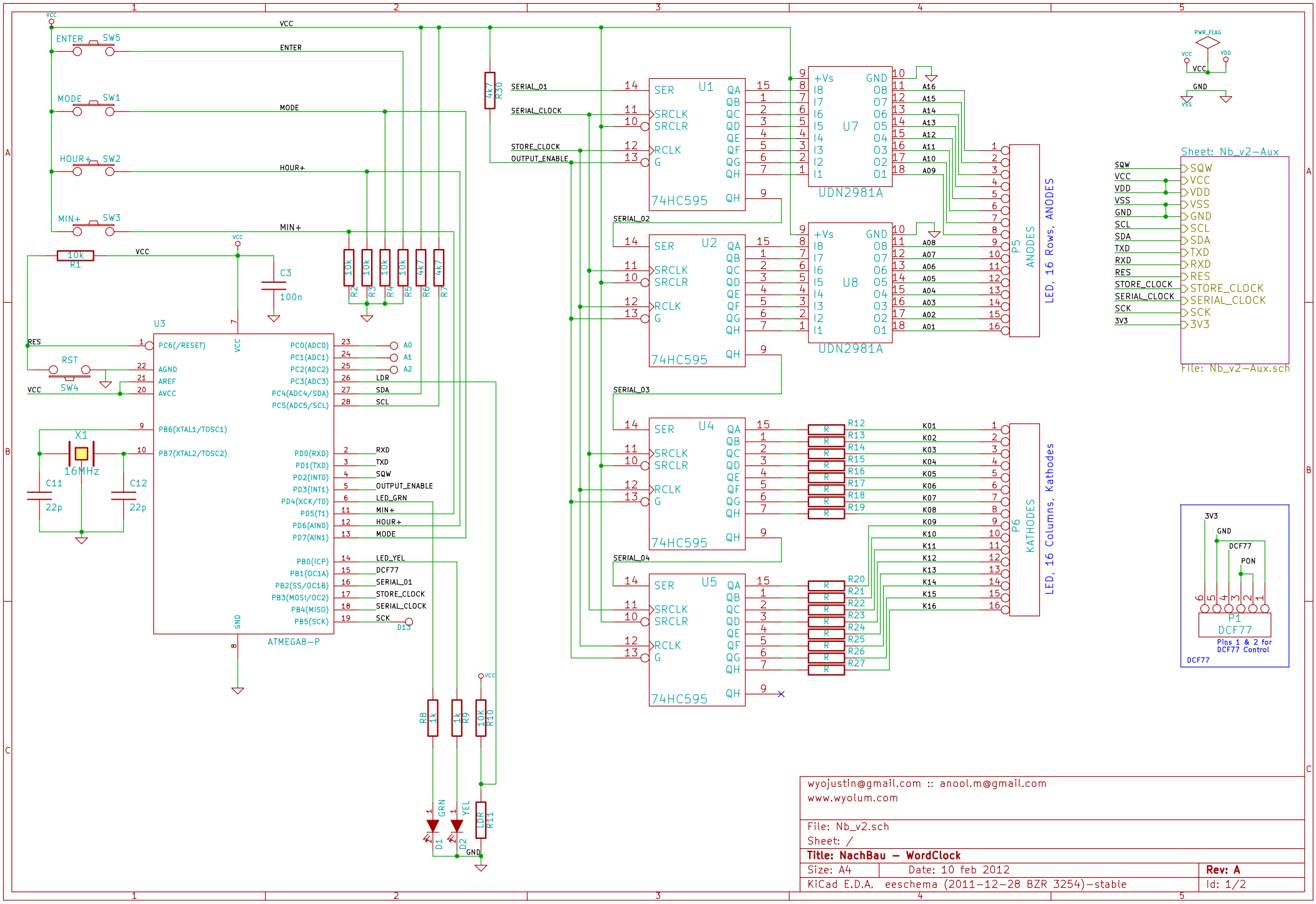

wyojustin@gmail.com :: anool.m@gmail.com
www.wyolum.com

File: Nb_v2.sch
Sheet: /

Title: NachBau – WordClock

Size: A4	Date: 10 feb 2012	**Rev: A**
KiCad E.D.A. eeschema (2011-12-28 BZR 3254)-stable		Id: 1/2

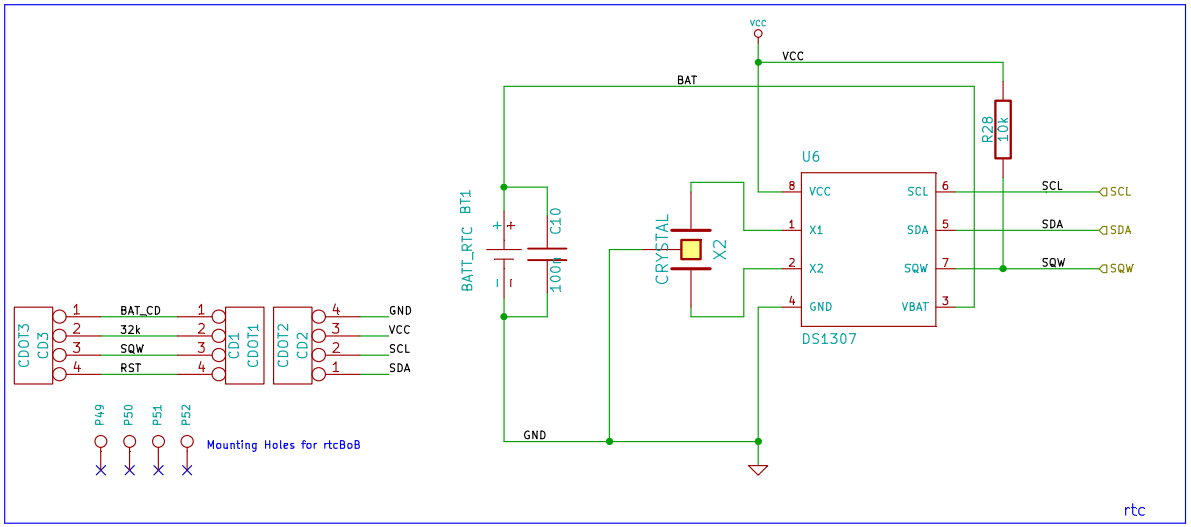

Mounting holes for C3Jr
8 holes around the board
with 3mm mounting hole
4 holes at corners for Housing
4 holes near LEDs for Baffle

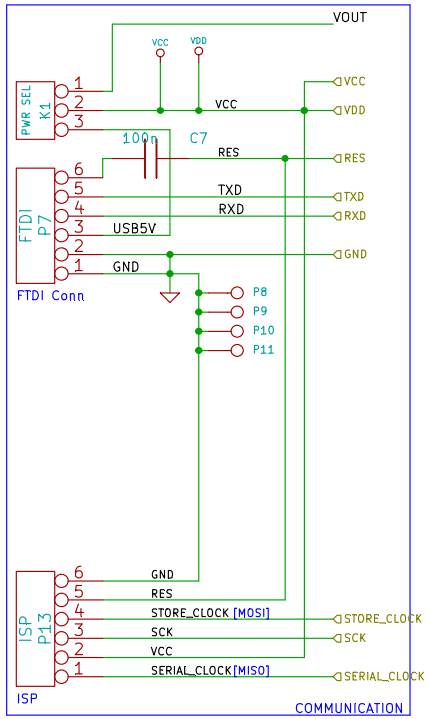

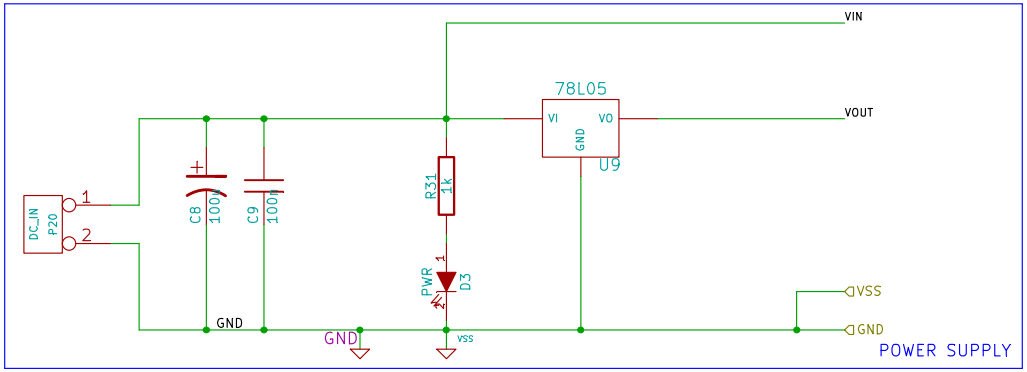

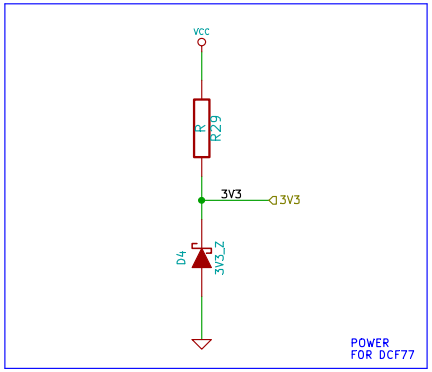

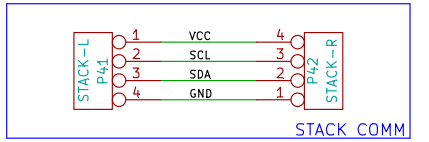

Stack-L and Stack-R have inverted pin nos
since one is facing Left and other is facing right.
When mounted this way on the board,
tracks from one to the other will be parallel - no cross over.

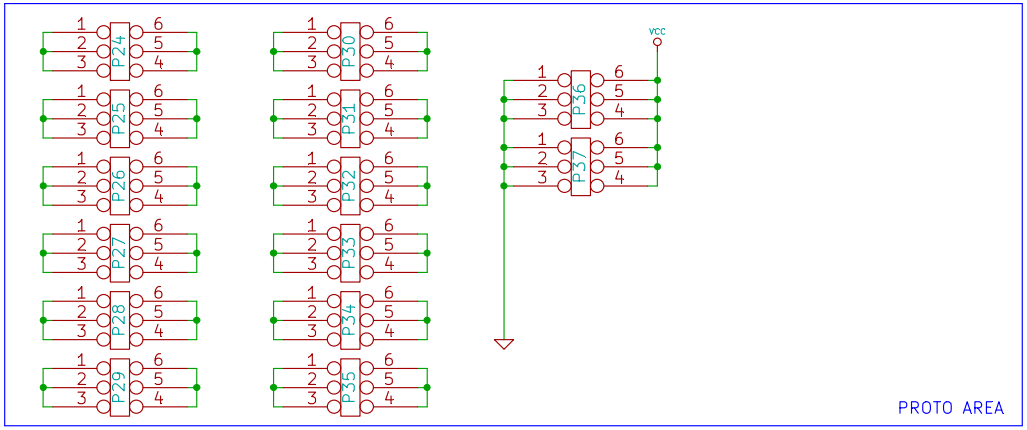

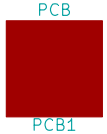

wyojustin@gmail.com :: anool.m@gmail.com
www.wyolum.com

File: Nb_v2-Aux.sch
Sheet: /Nb_v2-Aux/

Title: NachBau - WordClock

Size: A4	Date: 10 feb 2012	**Rev: A**
KiCad E.D.A. eeschema (2011-12-28 BZR 3254)-stable		Id: 2/2