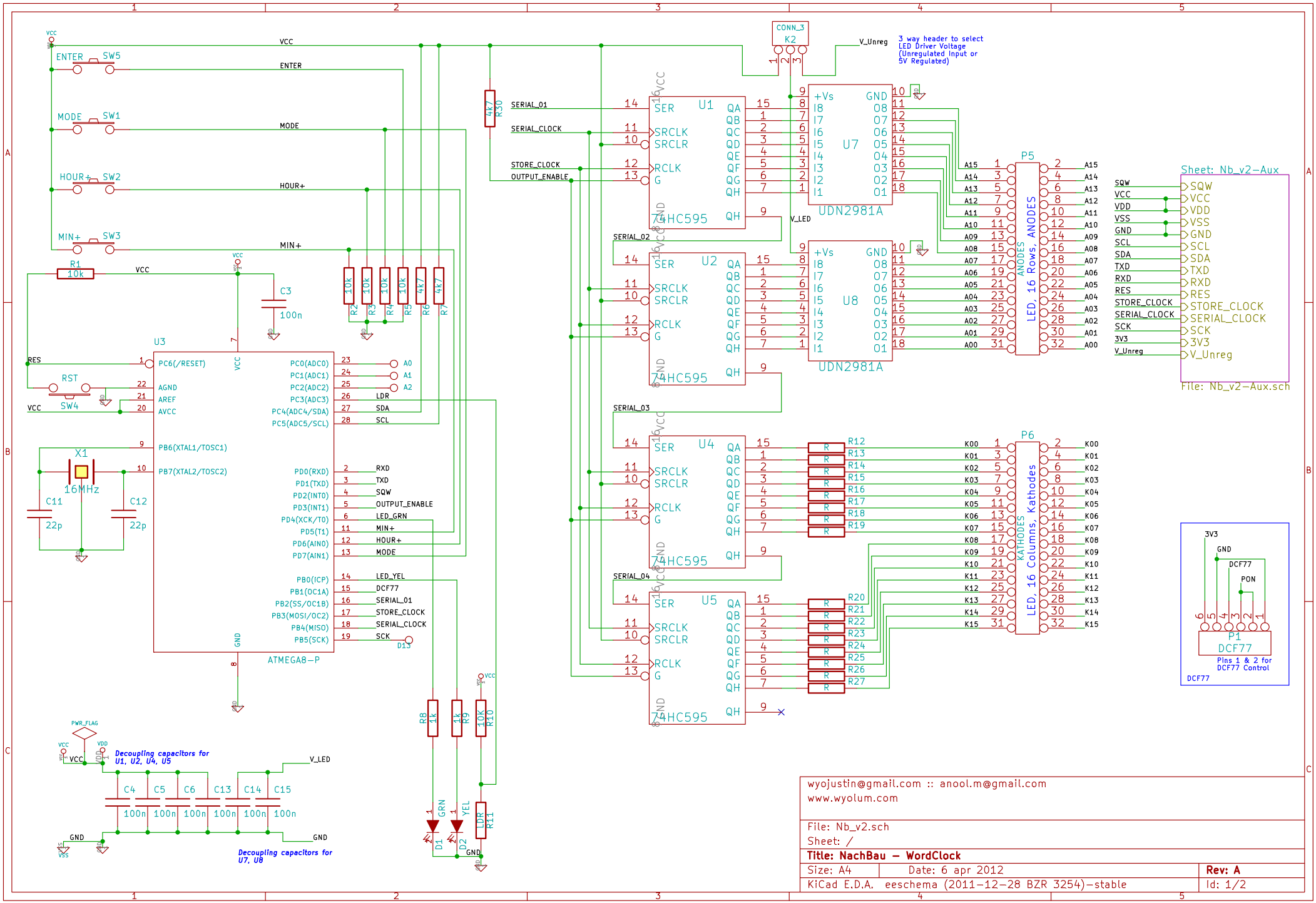

wyojustin@gmail.com :: anool.m@gmail.com
www.wyolum.com

File: Nb_v2.sch
Sheet: /

Title: NachBau – WordClock

Size: A4	Date: 6 apr 2012	**Rev: A**
KiCad E.D.A. eeschema (2011-12-28 BZR 3254)-stable		Id: 1/2

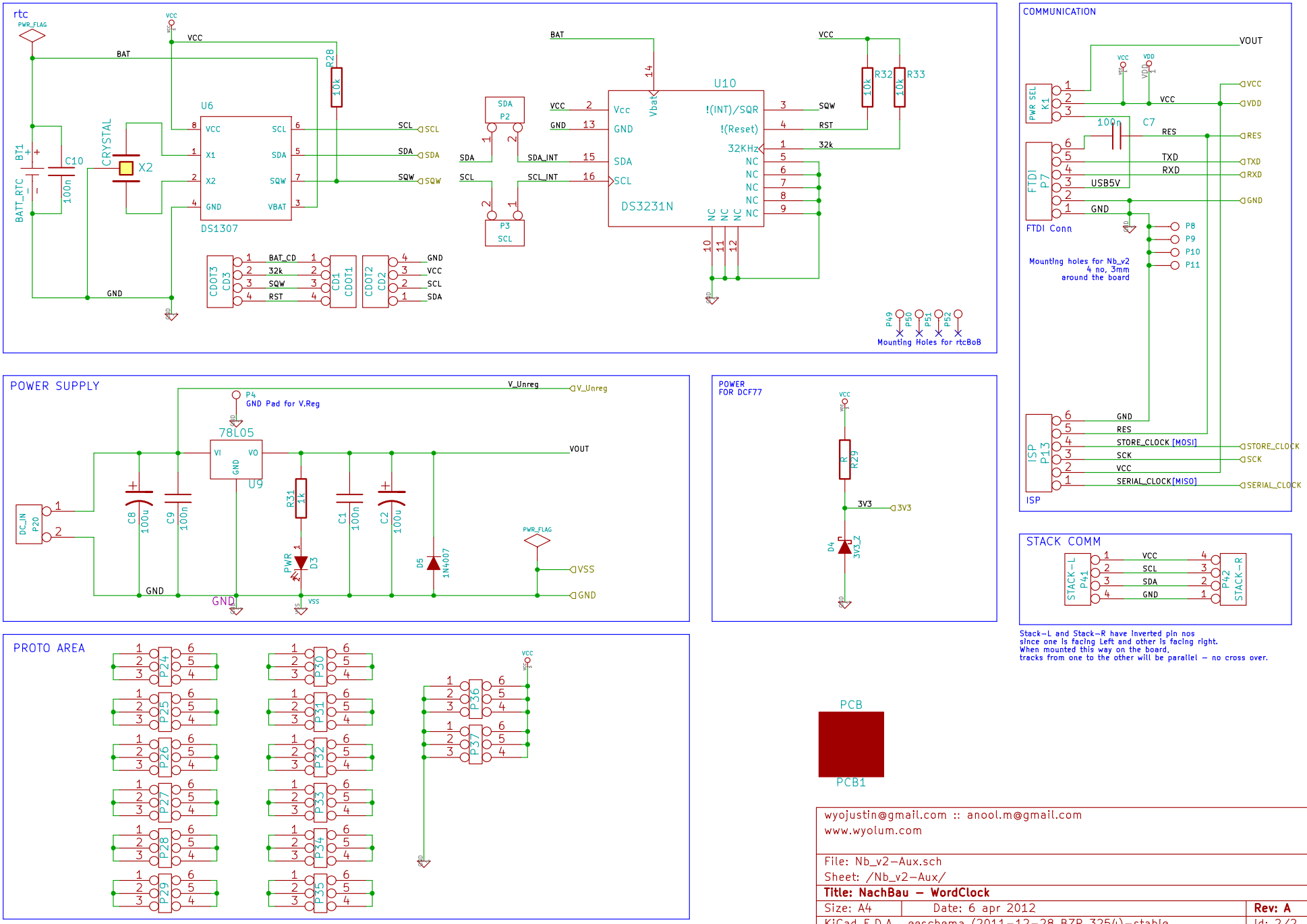

wyojustin@gmail.com :: anool.m@gmail.com
www.wyolum.com

File: Nb_v2-Aux.sch
Sheet: /Nb_v2-Aux/

Title: NachBau - WordClock

Size: A4	Date: 6 apr 2012	**Rev: A**
KiCad E.D.A. eeschema (2011-12-28 BZR 3254)-stable		Id: 2/2