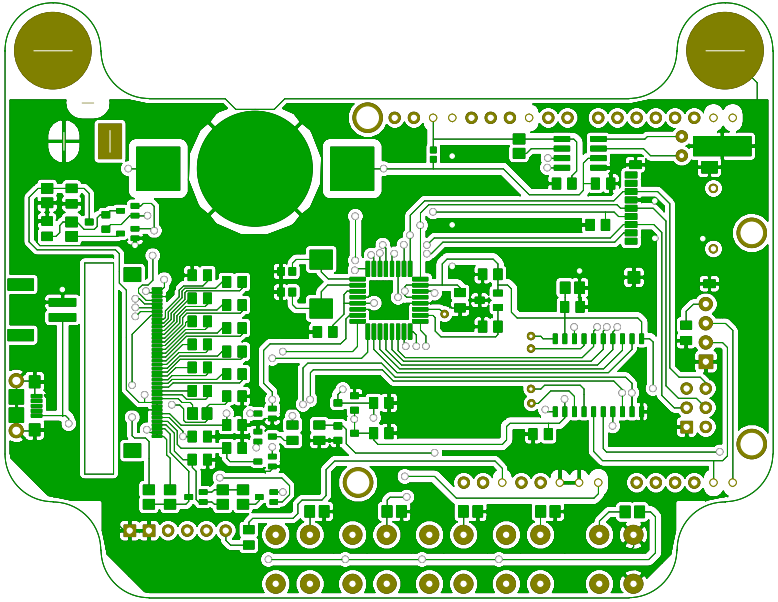

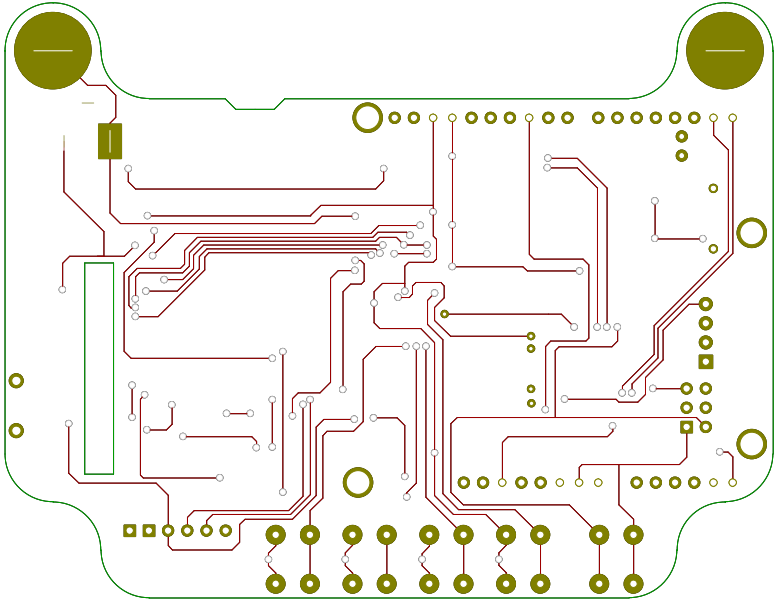

V_IN
P6
BATT_COIN
B72
BATT_CLIP
B71
D2
R8
U5
X2
32.768kHz
C32
C33
C5
SD_CARD_MICRO
SD1
P4
SV
SCL
SDA
GND
C34
C35B
MISO
SCK
RST
3V3
MOSI
GND
P2 ISP
R16
C4
C7
C27
U1
C8
PB2
A3
A07_3V3
TX50108
U4
PB3
A07
C2
X1
8MHz
C9
C6
U2
C29
C10
C11
C12
C13
C14
C15
C16
C17
C18
C19
C20
C21
C22
C23
C24
C25
R9
C3
U6
C30
C35
U3
C28
D1
C5
C6
Q4
Q5
Q6
Q7
R10
C36
R12
R3
R11
R7
R13
R4
R5
R6
C31
GRN
FTDI
P3
BLK
V1
P5 1ST_3V3
P7
USB_B
R2
C1
Q1
R1
C3
Q3
Q2

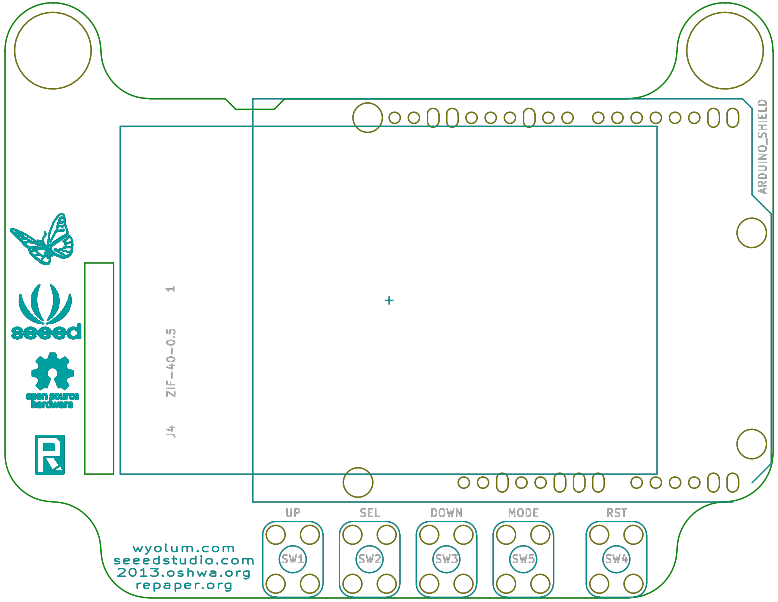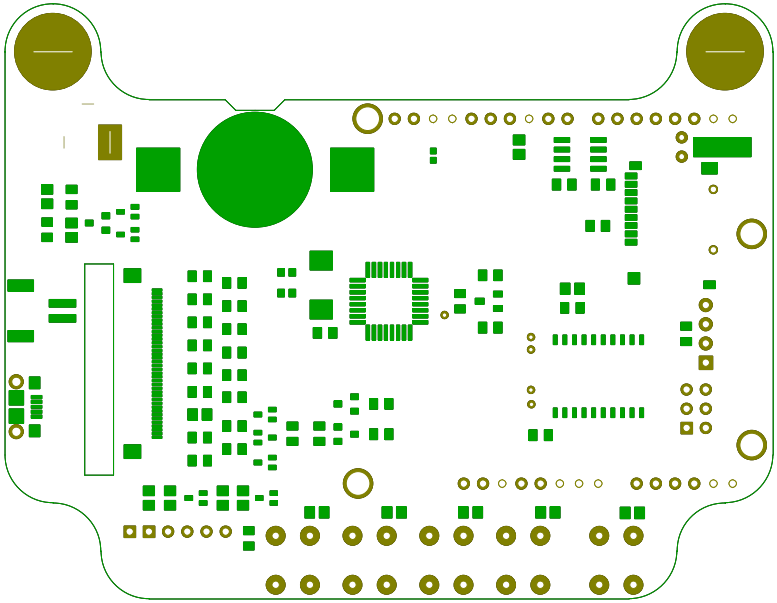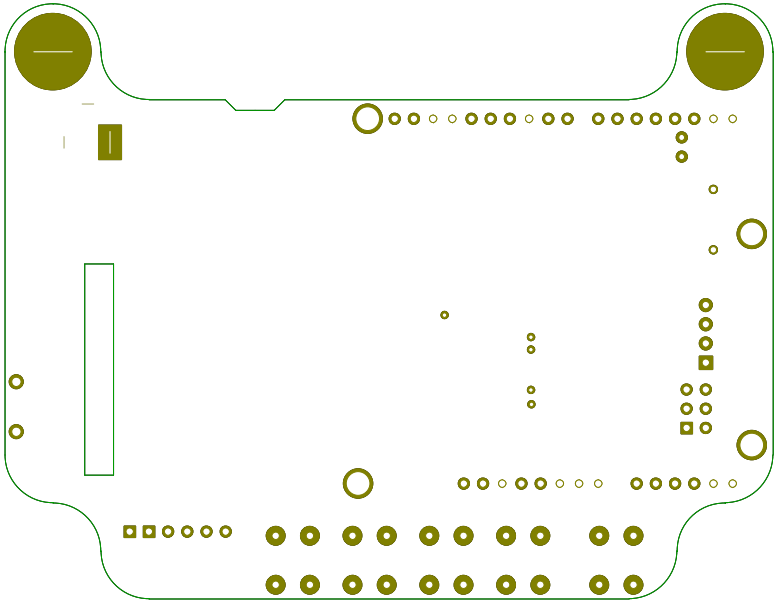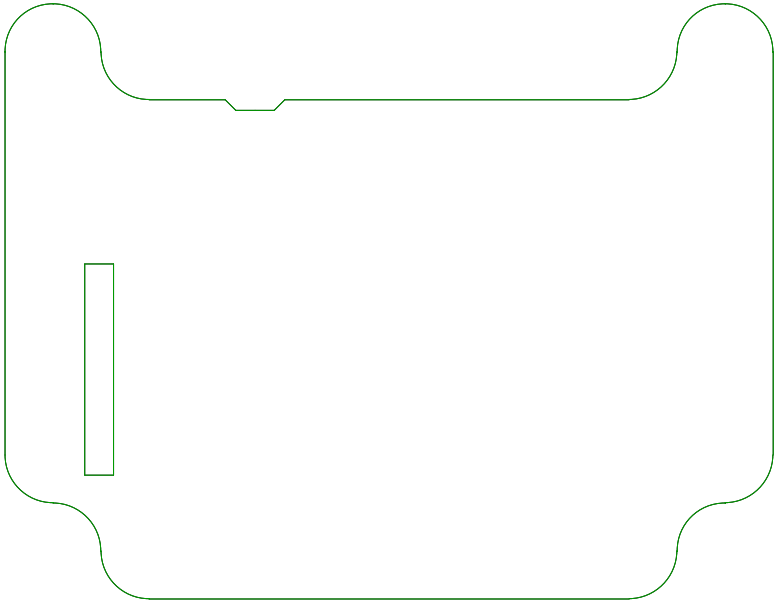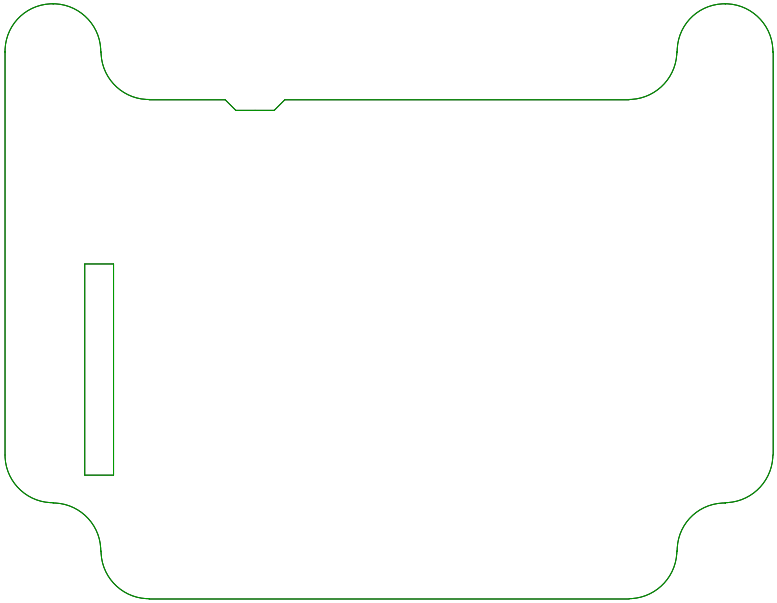
ARDUINO_SHIELD
J4
ZIF-40-0.5
1
UP
SEL
DOWN
MODE
RST
SW1
SW2
SW3
SW5
SW4
wyolum.com
seeedstudio.com
2013.oshwa.org
repaper.org