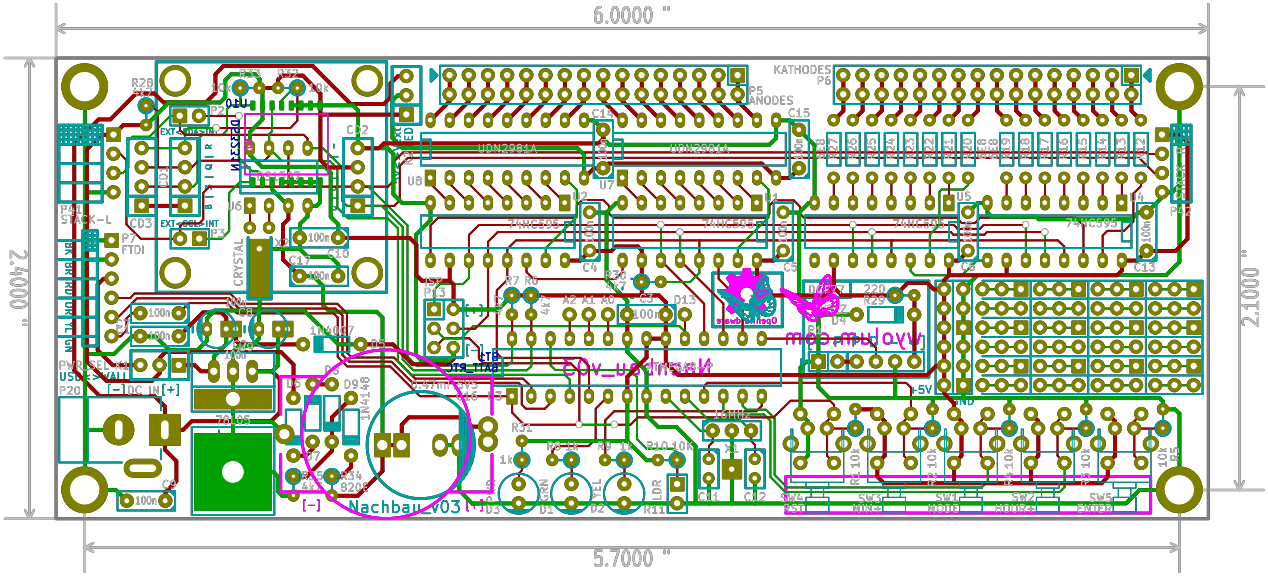
6.0000 "
2.4000 "
2.1000 "
5.7000 "
KATHODES
ANODES
ULN2984A
ULN2804A
ULN2803A
ULN2803A
ULN2803A
ULN2803A
ULN2803A
ULN2803A
CRYSTAL
EXT_SOLO_INT
EXT_MASTER_INT
FTDI
USB-WALL
[-]DC IN[+]
7805
Nachbau_v03
Enjoy_hardware
mega_muxxy
+5V
GND
SW1
SW2
SW3
SW4
SW5
SW6
SW7
SW8
SW9
SW10
SW11
SW12
SW13
SW14
SW15
SW16