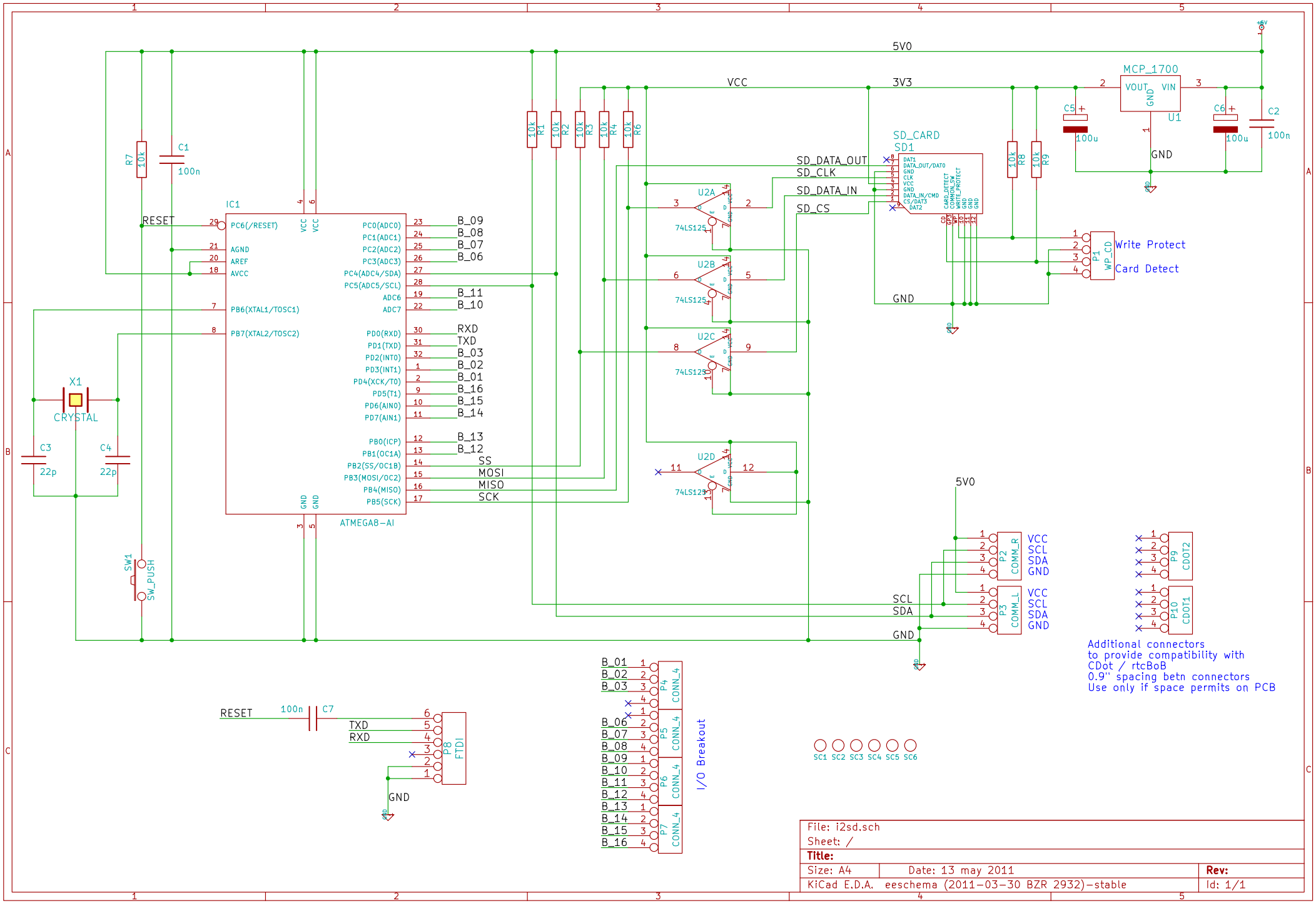
5V0
VCC
3V3
MCP_1700
VOUT
VIN
GND
U1
C5
100u
C6
100u
C2
100n
GND
SD_CARD
SD1
SD_DATA_OUT
SD_CLK
SD_DATA_IN
SD_CS
GND
Write Protect
Card Detect
P1
WP_CD
R7
10k
C1
100n
IC1
RESET
PC6(/RESET)
AGND
AREF
AVCC
PB6(XTAL1/TOSC1)
PB7(XTAL2/TOSC2)
PC0(ADC0)
PC1(ADC1)
PC2(ADC2)
PC3(ADC3)
PC4(ADC4/SDA)
PC5(ADC5/SCL)
ADC6
ADC7
PD0(RXD)
PD1(TXD)
PD2(INT0)
PD3(INT1)
PD4(XCK/T0)
PD5(T1)
PD6(AIN0)
PD7(AIN1)
PB0(ICP)
PB1(OC1A)
PB2(SS/OC1B)
PB3(MOSI/OC2)
PB4(MISO)
PB5(SCK)
ATMEGA8-AI
B_09
B_08
B_07
B_06
B_11
B_10
RXD
TXD
B_03
B_02
B_01
B_16
B_15
B_14
B_13
B_12
SS
MOSI
MISO
SCK
X1
CRYSTAL
C3
22p
C4
22p
SW1
SW_PUSH
R1
R2
R3
R4
R6
R8
R9
U2A
U2B
U2C
U2D
74LS125
SCL
SDA
GND
P2
COMM_R
P3
COMM_L
VCC
SCL
SDA
GND
P9
CDOT2
P10
CDOT1
Additional connectors
to provide compatibility with
CDot / rtcBoB
0.9" spacing betn connectors
Use only if space permits on PCB
RESET
100n
C7
TXD
RXD
P8
FTDI
GND
B_01
B_02
B_03
B_06
B_07
B_08
B_09
B_10
B_11
B_12
B_13
B_14
B_15
B_16
P4
P5
P6
P7
CONN_4
I/O Breakout
SC1
SC2
SC3
SC4
SC5
SC6
File: i2sd.sch
Sheet: /
Title:
Size: A4
Date: 13 may 2011
Rev:
KiCad E.D.A. eeschema (2011-03-30 BZR 2932)-stable
Id: 1/1