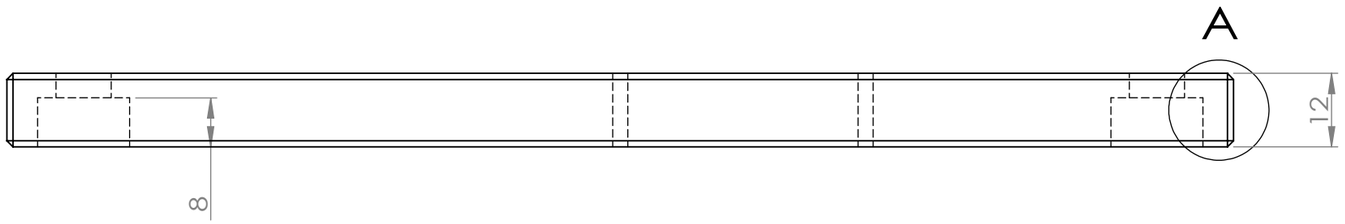

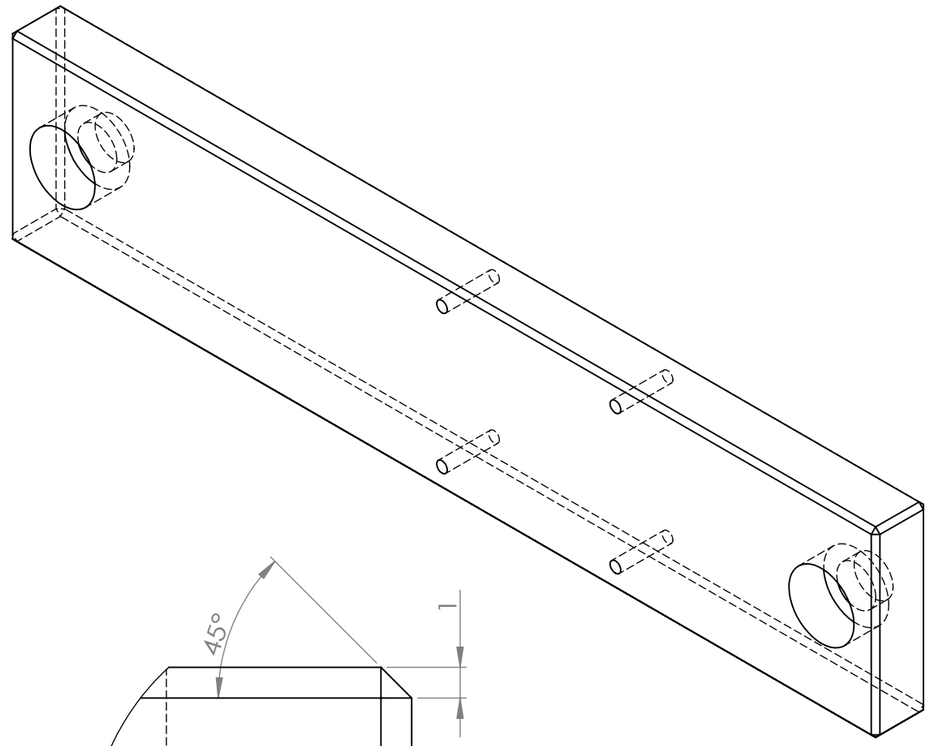

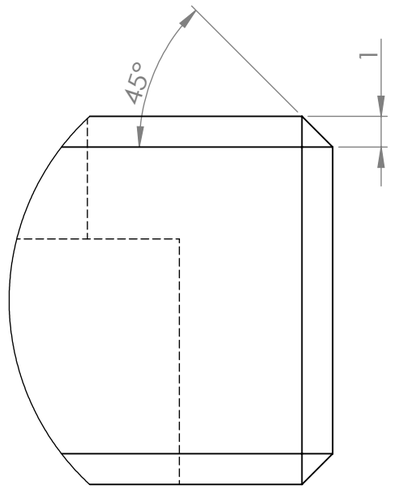

DETAIL A
SCALE 5 : 1

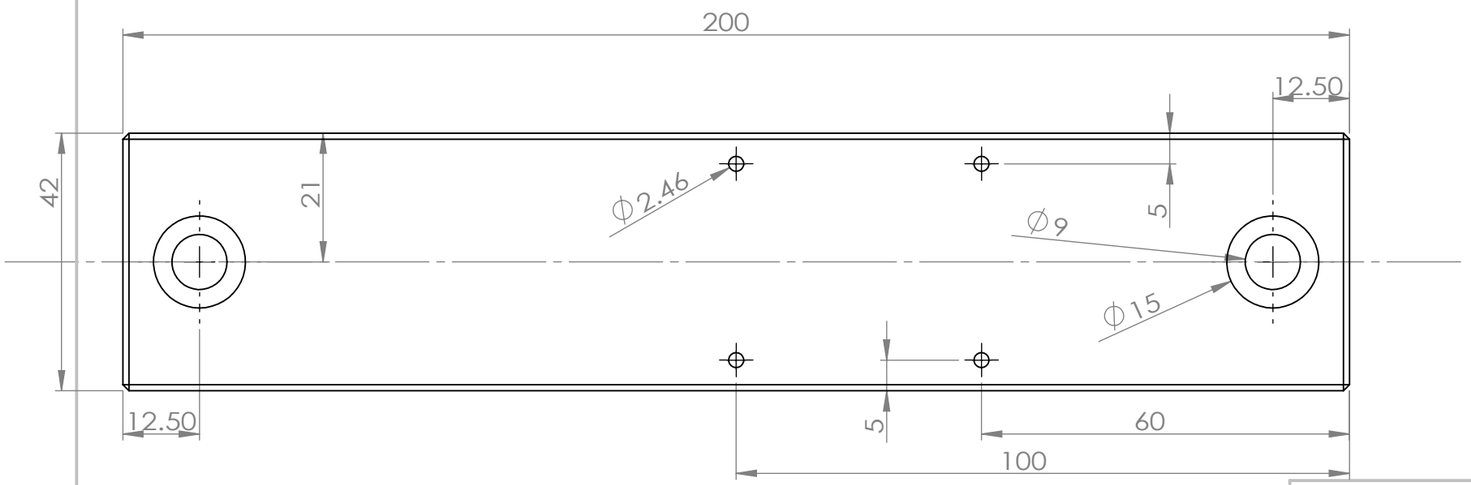

UNLESS OTHERWISE SPECIFIED: DIMENSIONS ARE IN MILLIMETERS SURFACE FINISH: TOLERANCES: LINEAR: ANGULAR:	FINISH:			DEBUR AND BREAK SHARP EDGES	DO NOT SCALE DRAWING	REVISION
	NAME	SIGNATURE	DATE		TITLE:	
DRAWN						
CHK'D						
APPV'D						
MFG						
Q.A				MATERIAL: Aluminum	DWG NO. adapterz	A3
				WEIGHT:	SCALE:1:1	SHEET 1 OF 1

SolidWorks Student Edition.
For Academic Use Only.