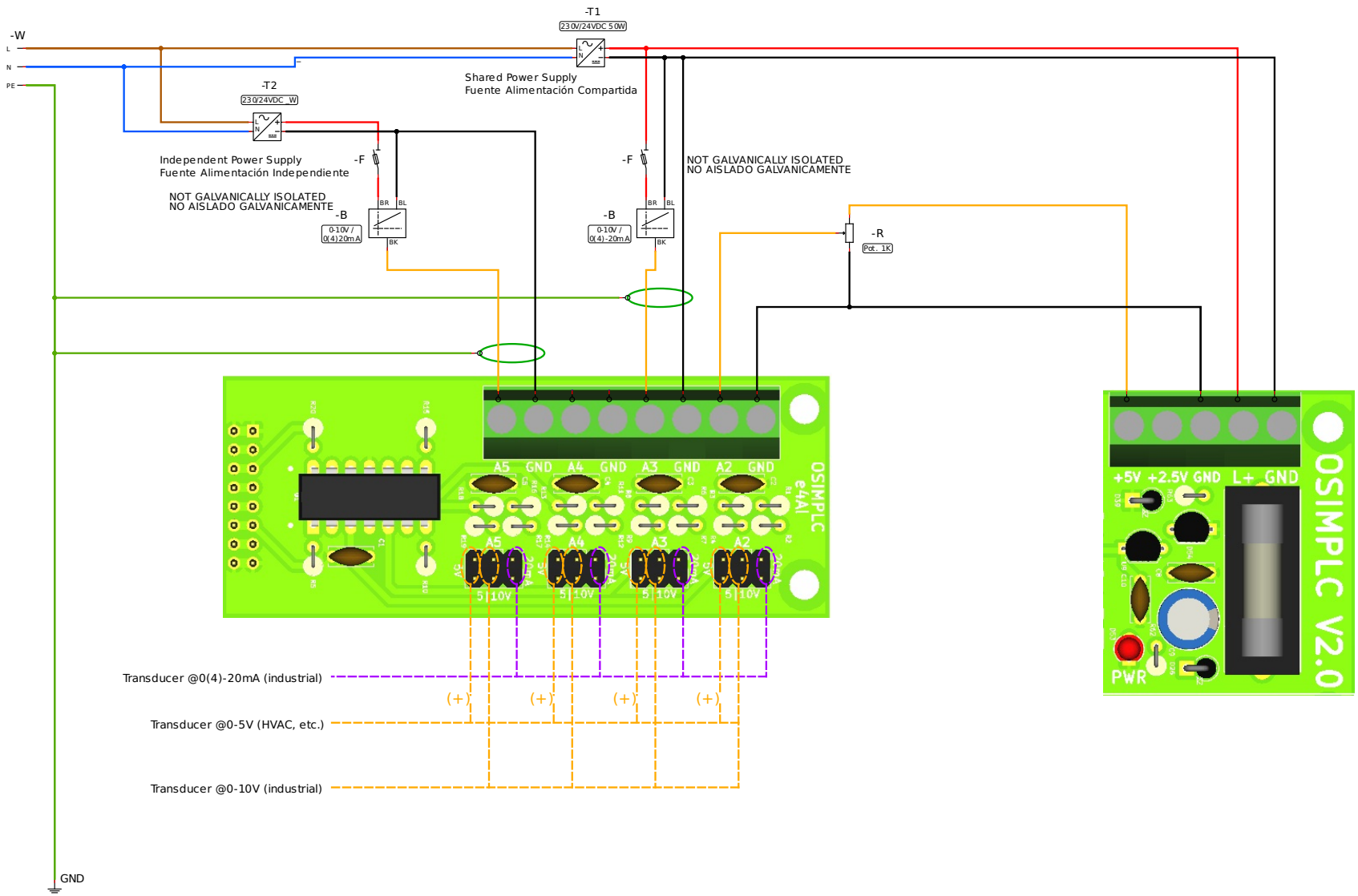

Author: Daniel H. Mirkin

Date: 18/2/19

OSIMPLC Analog Inputs Expansion Module: Connection and Jumpers Configuration

CC BY SA

File:

Folio: 1/1