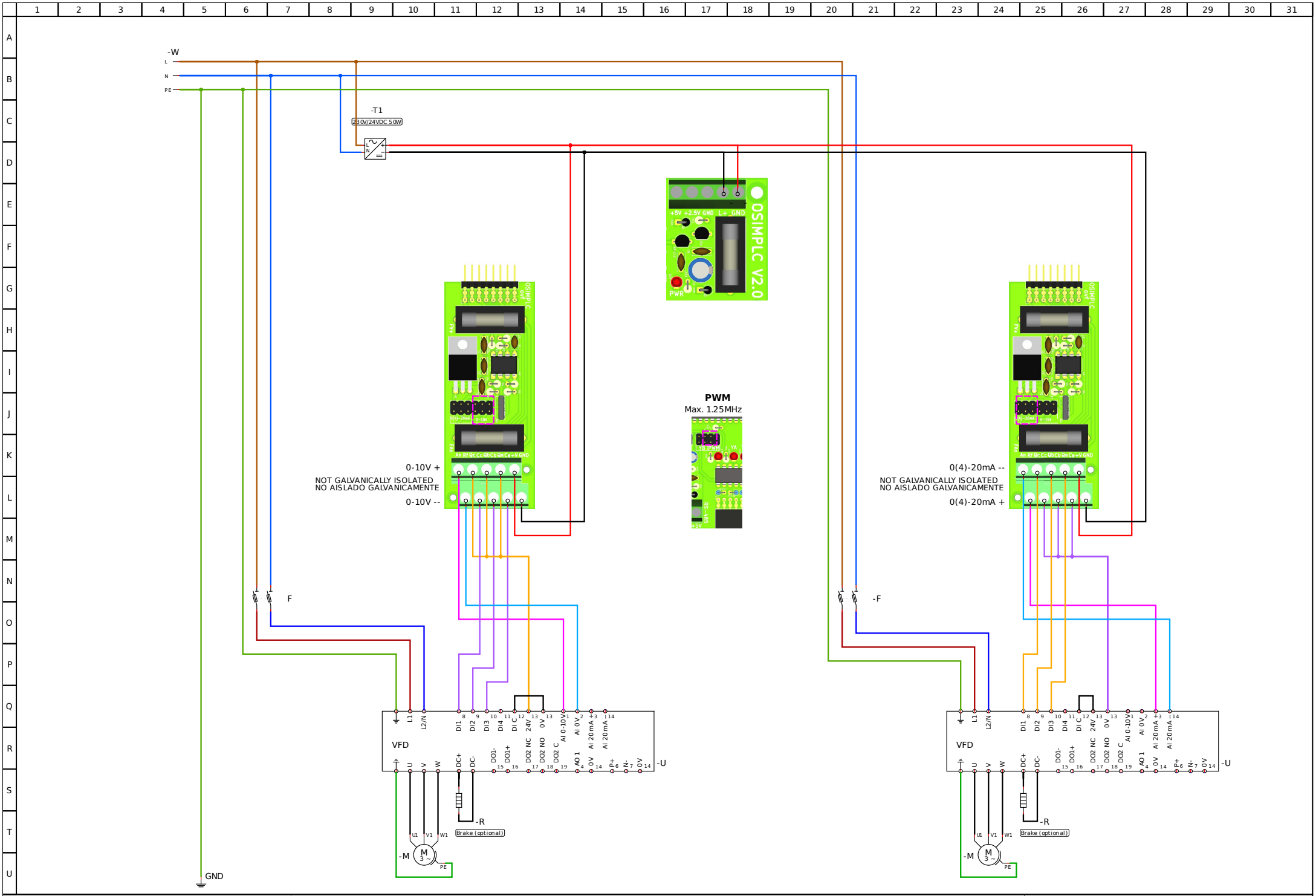

Author: Daniel H. Mirkin

Date: 18/2/19

OSIMPLC Frequency Drive Connection

CC BY SA

File:

Folio: 1/1