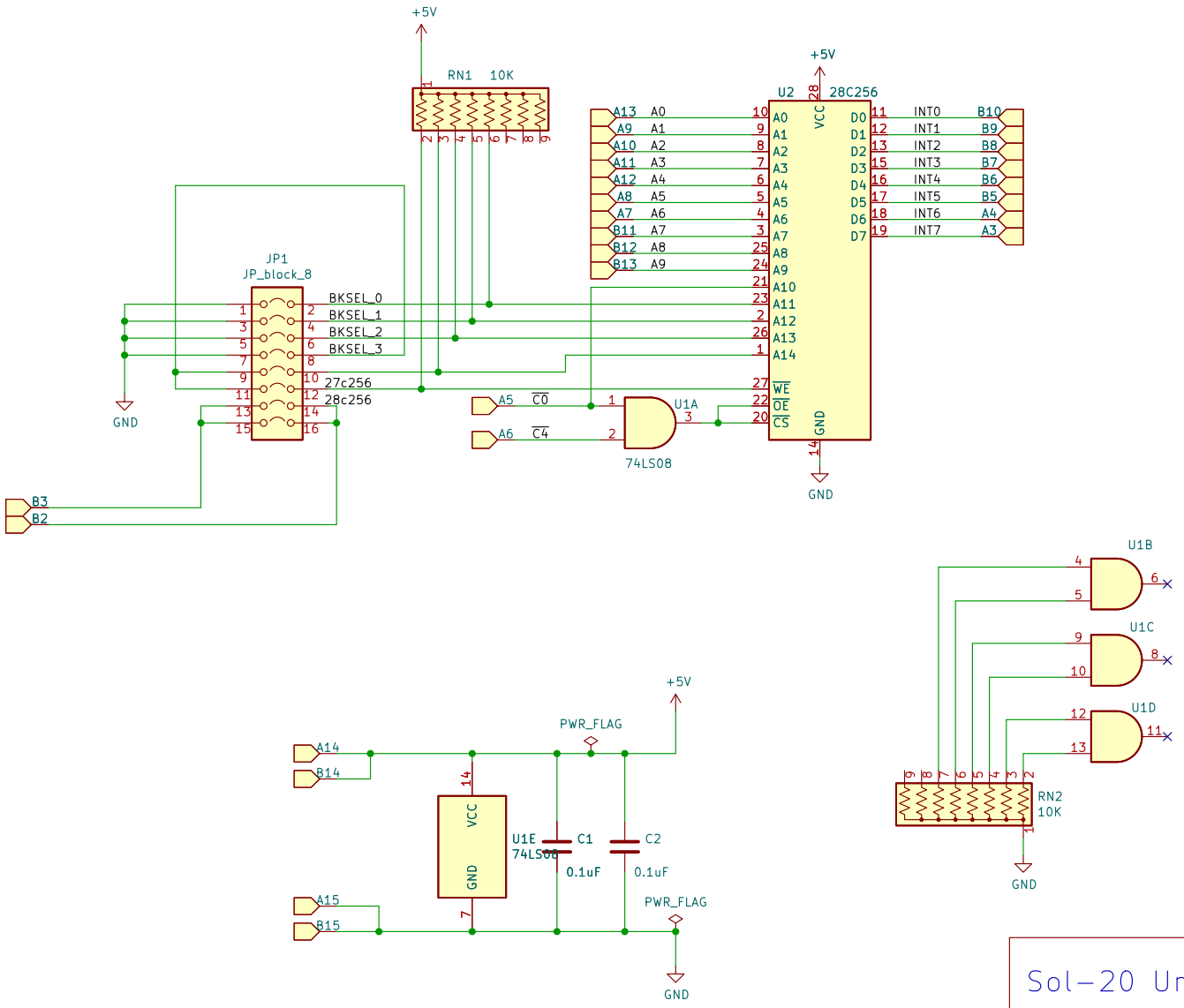

Sol-20 Unversal Personality Module

Sheet: 1/ 1
File: personality.kicad_sch

Title: SOL-20 Universal Personality Module

Size: A4	Date: 2022-10-11	Rev: 3.0
KiCad E.D.A. kicad (6.0.8-1)-1		Id: 1/1