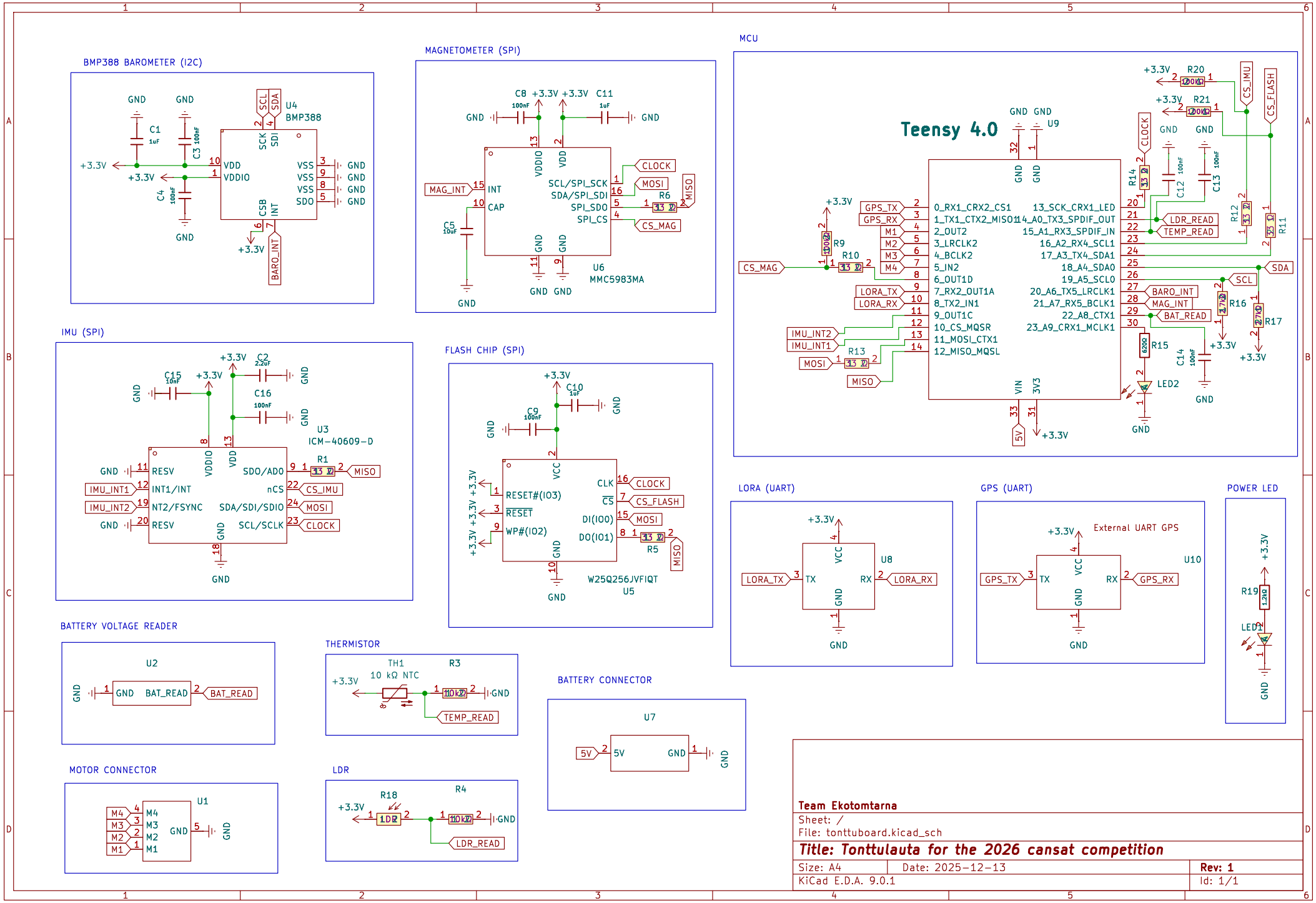
BMP388 BAROMETER (I2C)
U4
BMP388
MAGNETOMETER (SPI)
U6
MMC5983MA
MCU
Teensy 4.0
U9
IMU (SPI)
U3
ICM-40609-D
FLASH CHIP (SPI)
W25Q256JVFIQT
U5
LORA (UART)
U8
GPS (UART)
External UART GPS
U10
POWER LED
BATTERY VOLTAGE READER
U2
THERMISTOR
TH1
10 kΩ NTC
BATTERY CONNECTOR
U7
MOTOR CONNECTOR
U1
LDR
Team Ekotomtarna
Sheet: /
File: tonttuboard.kicad_sch
Title: Tonttulauta for the 2026 cansat competition
Size: A4
Date: 2025-12-13
Rev: 1
KiCad E.D.A. 9.0.1
Id: 1/1